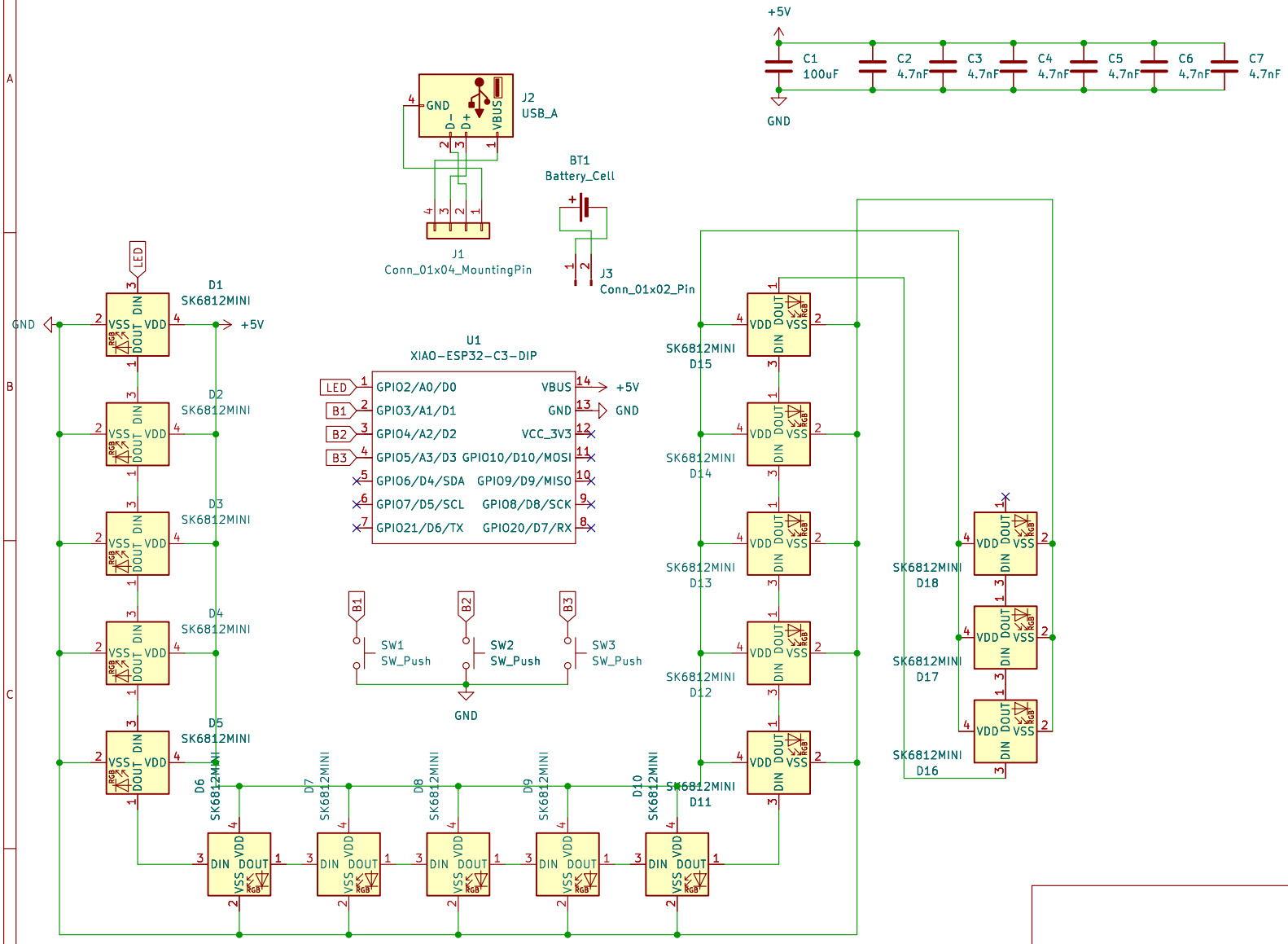

Sheet: /
File: pixel-dongle.kicad_sch

Title:

Size: A4	Date:	Rev:
KiCad E.D.A. 9.0.1		Id: 1/1