# To Simulate Load Shedding Condition

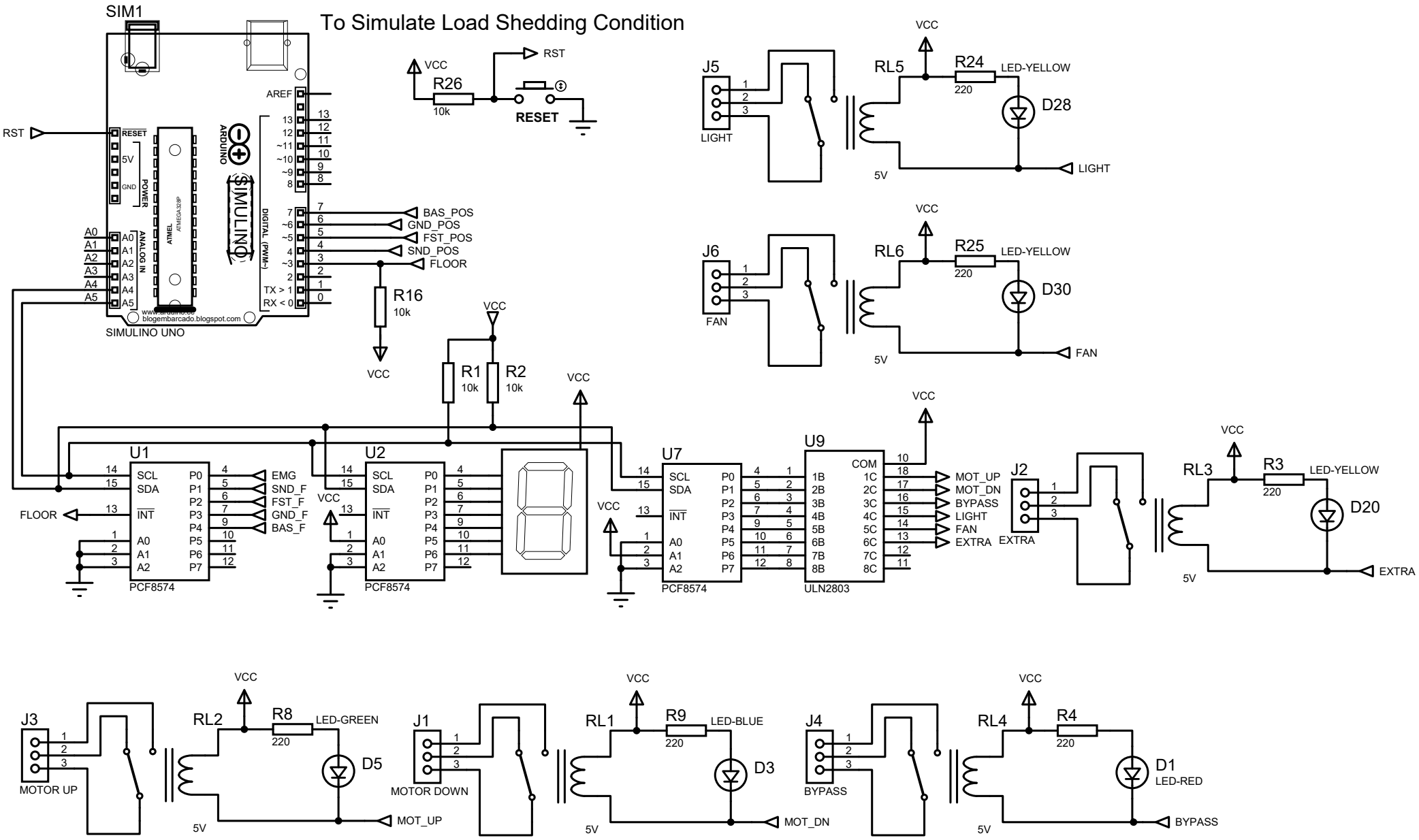

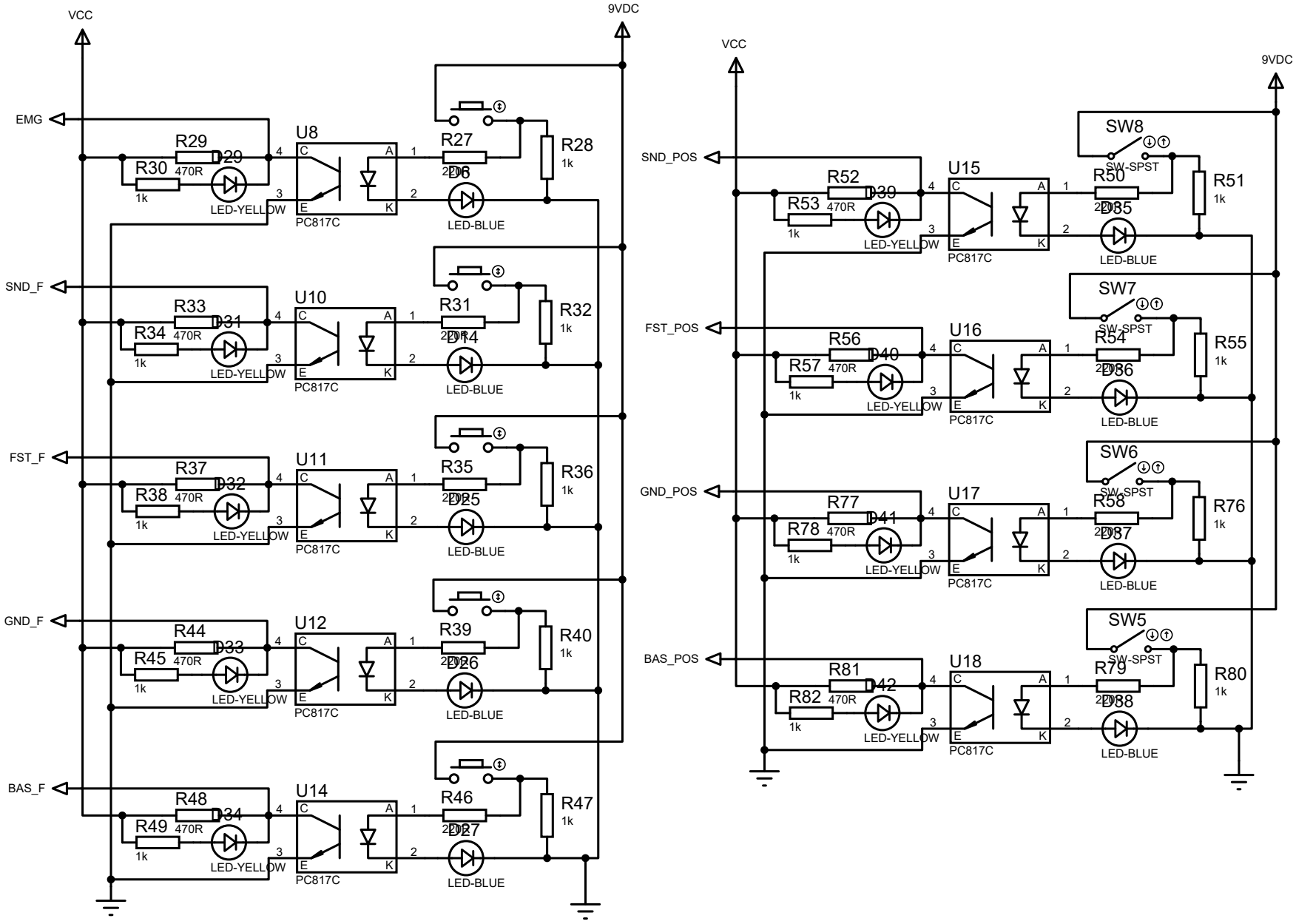
VCC
9VDC
EMG
SND_F
FST_F
GND_F
BAS_F
R29
D29
R30
470R
1k
LED-YELLOW
U8
PC817C
R27
D26
R28
1k
LED-BLUE
R33
D31
R34
470R
1k
LED-YELLOW
U10
PC817C
R31
D24
R32
1k
LED-BLUE
R37
D32
R38
470R
1k
LED-YELLOW
U11
PC817C
R35
D25
R36
1k
LED-BLUE
R44
D33
R45
470R
1k
LED-YELLOW
U12
PC817C
R39
D26
R40
1k
LED-BLUE
R48
D34
R49
470R
1k
LED-YELLOW
U14
PC817C
R46
D27
R47
1k
LED-BLUE
VCC
9VDC
SND_POS
FST_POS
GND_POS
BAS_POS
SW8
SW-SPST
R52
D39
R53
470R
1k
LED-YELLOW
U15
PC817C
R50
D85
R51
1k
LED-BLUE
SW7
SW-SPST
R56
D40
R57
470R
1k
LED-YELLOW
U16
PC817C
R54
D86
R55
1k
LED-BLUE
SW6
SW-SPST
R77
D41
R78
470R
1k
LED-YELLOW
U17
PC817C
R58
D87
R76
1k
LED-BLUE
SW5
SW-SPST
R81
D42
R82
470R
1k
LED-YELLOW
U18
PC817C
R79
D88
R80
1k
LED-BLUE