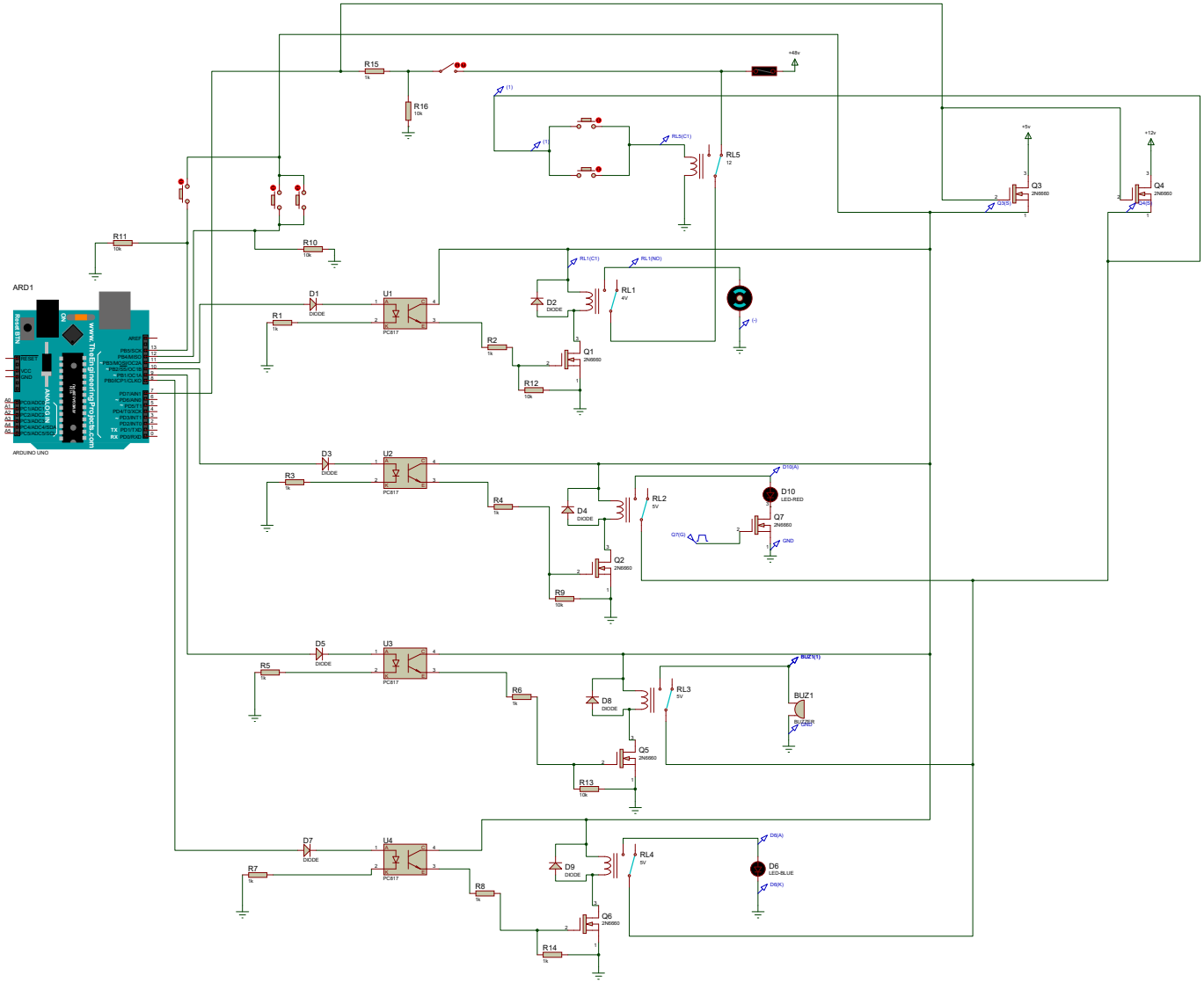
R15
1k
R16
10k
+48v
(1)
RL5(C1)
RL5
12
+5v
+12v
Q3
2N6660
Q3(S)
Q4
2N6660
Q4(S)
R11
10k
R10
10k
ARD1
Reset BTN
ON
RESET
VCC
GND
ARDUINO UNO
www.TheEngineeringProjects.com
AREF
PB5/SCK
PB4/MISO
PB3/MOSI/OC2
PB2/SS/OC1B
PB1/OC1A
PB0/ICP/CLKO
PD7/AIN1
PD6/AIN0
PD5/T1
PD4/T0/XCK
PD3/INT1
PD2/INT0
PD1/TXD
PD0/RXD
TX
RX
A0
A1
A2
A3
A4
A5
PC0/ADC0
PC1/ADC1
PC2/ADC2
PC3/ADC3
PC4/ADC4/SDA
PC5/ADC5/SCL
D1
DIODE
U1
PC817
R1
1k
R2
1k
RL1(C1)
RL1(NO)
RL1
4V
D2
DIODE
Q1
2N6660
R12
10k
(-)
D3
DIODE
U2
PC817
R3
1k
R4
1k
D4
DIODE
RL2
5V
D10(A)
D10
LED-RED
Q7
2N6660
Q7(G)
GND
Q2
2N6660
R9
10k
D5
DIODE
U3
PC817
R5
1k
R6
1k
D8
DIODE
RL3
5V
BUZ1(1)
BUZ1
BUZZER
GND
Q5
2N6660
R13
10k
D7
DIODE
U4
PC817
R7
1k
R8
1k
D9
DIODE
RL4
5V
D6(A)
D6
LED-BLUE
D6(K)
Q6
2N6660
R14
1k