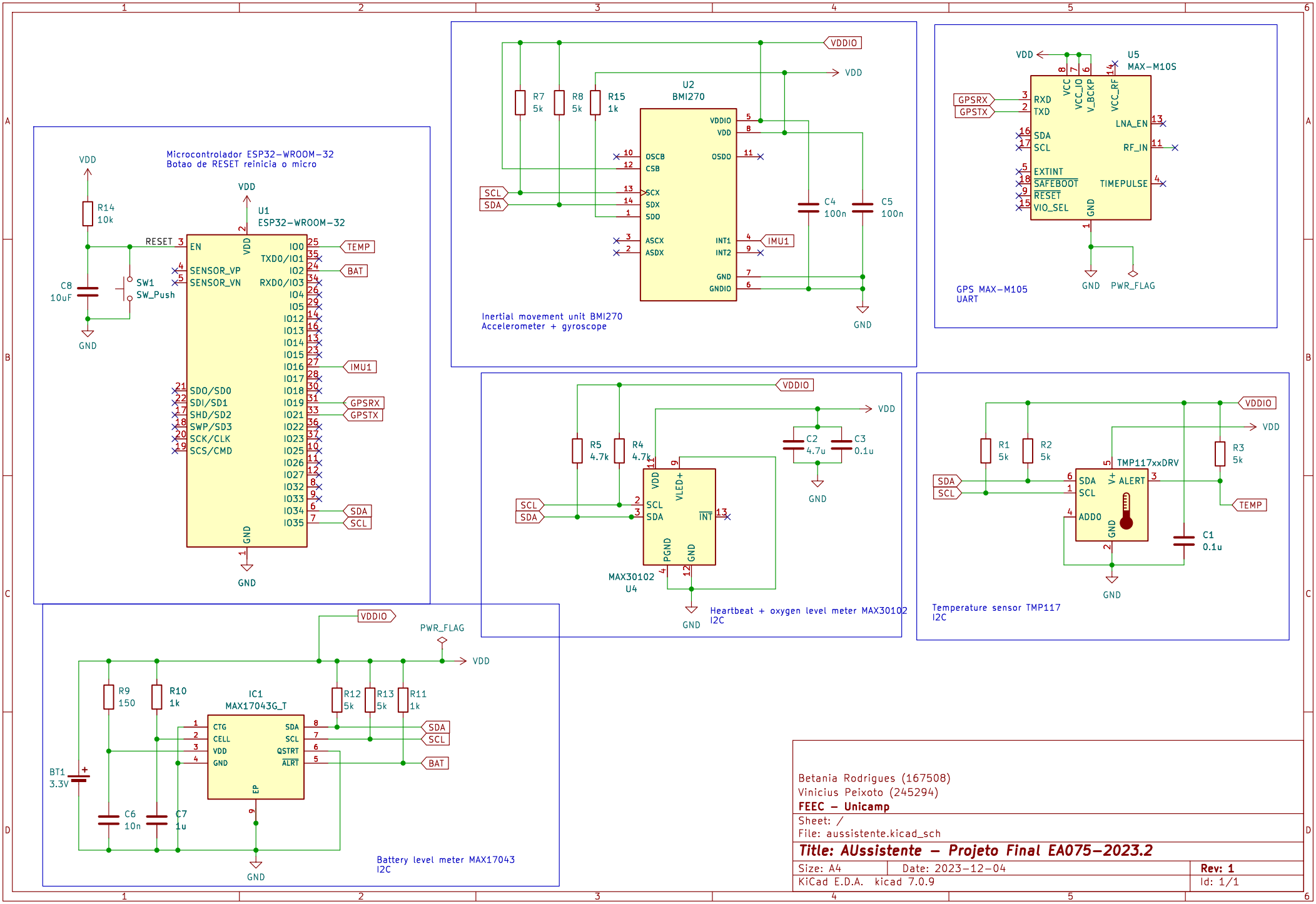
Microcontrolador ESP32-WROOM-32
Botao de RESET reinicia o micro
U1
ESP32-WROOM-32
R14
10k
C8
10uF
SW1
SW_Push
RESET
EN
SENSOR_VP
SENSOR_VN
SDO/SD0
SDI/SD1
SHD/SD2
SWP/SD3
SCK/CLK
SCS/CMD
IO0
TXD0/IO1
IO2
RXD0/IO3
IO4
IO5
IO12
IO13
IO14
IO15
IO16
IO17
IO18
IO19
IO21
IO22
IO23
IO25
IO26
IO27
IO32
IO33
IO34
IO35
TEMP
BAT
IMU1
GPSRX
GPSTX
SDA
SCL
VDD
GND
U2
BMI270
R7
5k
R8
5k
R15
1k
OSCB
CSB
SCX
SDX
SDO
ASCX
ASDX
VDDIO
OSDO
INT1
INT2
GNDIO
C4
100n
C5
100n
Inertial movement unit BMI270
Accelerometer + gyroscope
U5
MAX-M10S
RXD
TXD
VCC
VCC_IO
V_BCKP
VCC_RF
LNA_EN
RF_IN
EXTINT
SAFEBOOT
RESET
VIO_SEL
TIMEPULSE
PWR_FLAG
GPS MAX-M105
UART
R5
4.7k
R4
4.7k
C2
4.7u
C3
0.1u
VLED+
INT
PGND
MAX30102
U4
Heartbeat + oxygen level meter MAX30102
I2C
R1
5k
R2
5k
R3
5k
TMP117xxDRV
V+
ALERT
ADD0
C1
0.1u
Temperature sensor TMP117
I2C
R9
150
R10
1k
IC1
MAX17043G_T
CTG
CELL
QSTRT
ALRT
EP
R12
5k
R13
5k
R11
1k
BT1
3.3V
C6
10n
C7
1u
Battery level meter MAX17043
I2C
Betania Rodrigues (167508)
Vinicius Peixoto (245294)
FEEC – Unicamp
Sheet: /
File: aussistente.kicad_sch
Title: AUssistente – Projeto Final EA075-2023.2
Size: A4
Date: 2023-12-04
Rev: 1
KiCad E.D.A. kicad 7.0.9
Id: 1/1