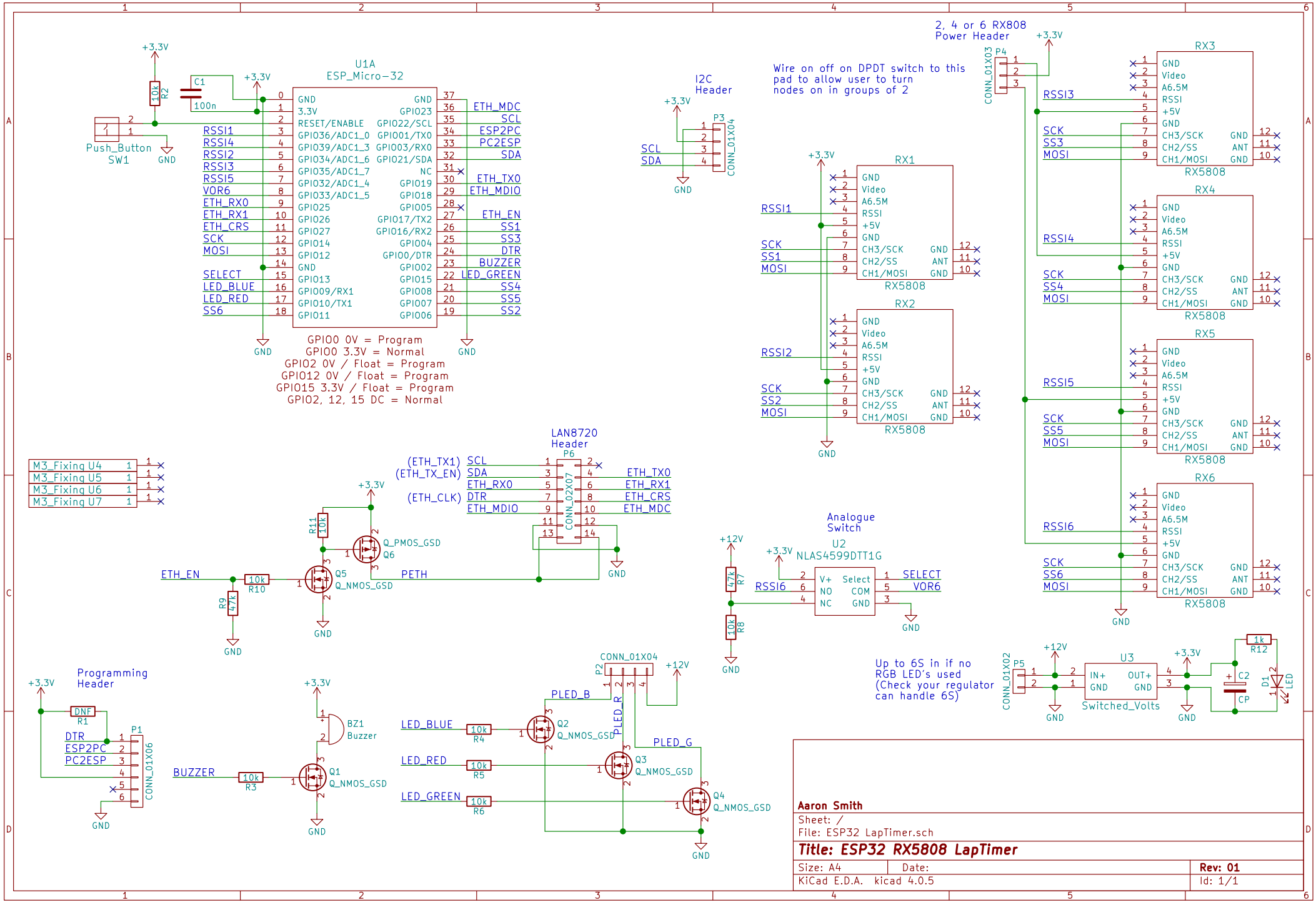
U1A
ESP_Micro-32
GPIO0 0V = Program
GPIO0 3.3V = Normal
GPIO2 0V / Float = Program
GPIO12 0V / Float = Program
GPIO15 3.3V / Float = Program
GPIO2, 12, 15 DC = Normal
Push_Button
SW1
I2C
Header
P3
CONN_01X04
2, 4 or 6 RX808
Power Header
P4
CONN_01X03
Wire on off on DPDT switch to this
pad to allow user to turn
nodes on in groups of 2
RX1
RX2
RX3
RX4
RX5
RX6
RX5808
LAN8720
Header
P6
CONN_02X07
Q_PMOS_GSD
Q_NMOS_GSD
Analogue
Switch
U2
NLAS4599DTT1G
Up to 6S in if no
RGB LED's used
(Check your regulator
can handle 6S)
P5
CONN_01X02
U3
Switched_Volts
Programming
Header
P1
CONN_01X06
BZ1
Buzzer
P2
CONN_01X04
PLED_B
PLED_R
PLED_G
Aaron Smith
Sheet: /
File: ESP32 LapTimer.sch
Title: ESP32 RX5808 LapTimer
Size: A4
Date:
Rev: 01
KiCad E.D.A. kicad 4.0.5
Id: 1/1