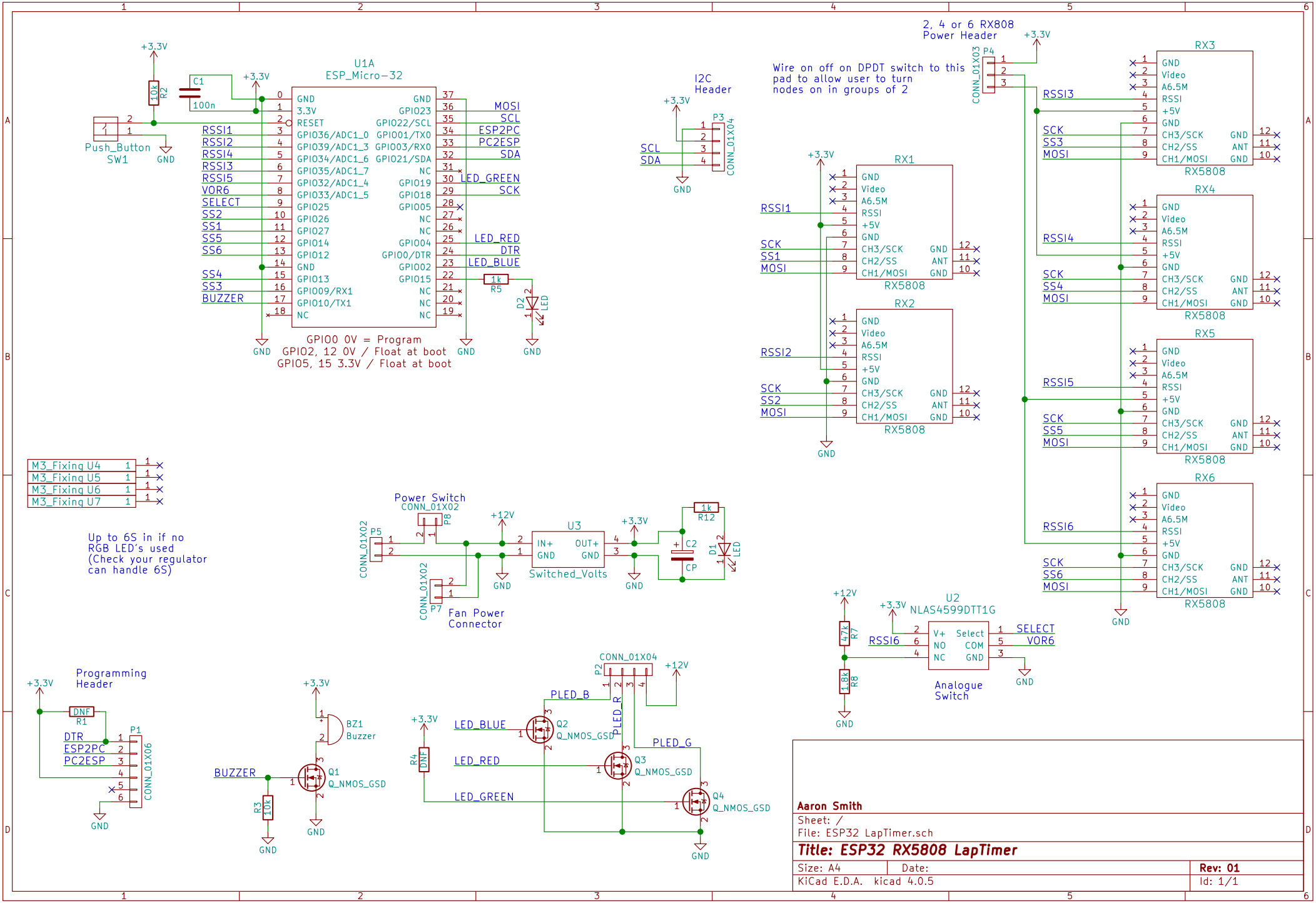
U1A
ESP_Micro-32
GPIO0 0V = Program
GPIO2, 12 0V / Float at boot
GPIO5, 15 3.3V / Float at boot
Push_Button
SW1
I2C
Header
P3
CONN_01X04
2, 4 or 6 RX808
Power Header
P4
CONN_01X03
Wire on off on DPDT switch to this pad to allow user to turn nodes on in groups of 2
RX1
RX2
RX3
RX4
RX5
RX6
RX5808
M3_Fixing U4
M3_Fixing U5
M3_Fixing U6
M3_Fixing U7
Up to 6S in if no RGB LED's used (Check your regulator can handle 6S)
Power Switch
CONN_01X02
P5
P8
P7
Fan Power Connector
U3
Switched_Volts
U2
NLAS4599DTT1G
Analogue Switch
Programming Header
P1
CONN_01X06
BZ1
Buzzer
Q1
Q_NMOS_GSD
P2
CONN_01X04
Q2
Q3
Q4
Aaron Smith
Sheet: /
File: ESP32 LapTimer.sch
Title: ESP32 RX5808 LapTimer
Size: A4
Date:
Rev: 01
KiCad E.D.A. kicad 4.0.5
Id: 1/1