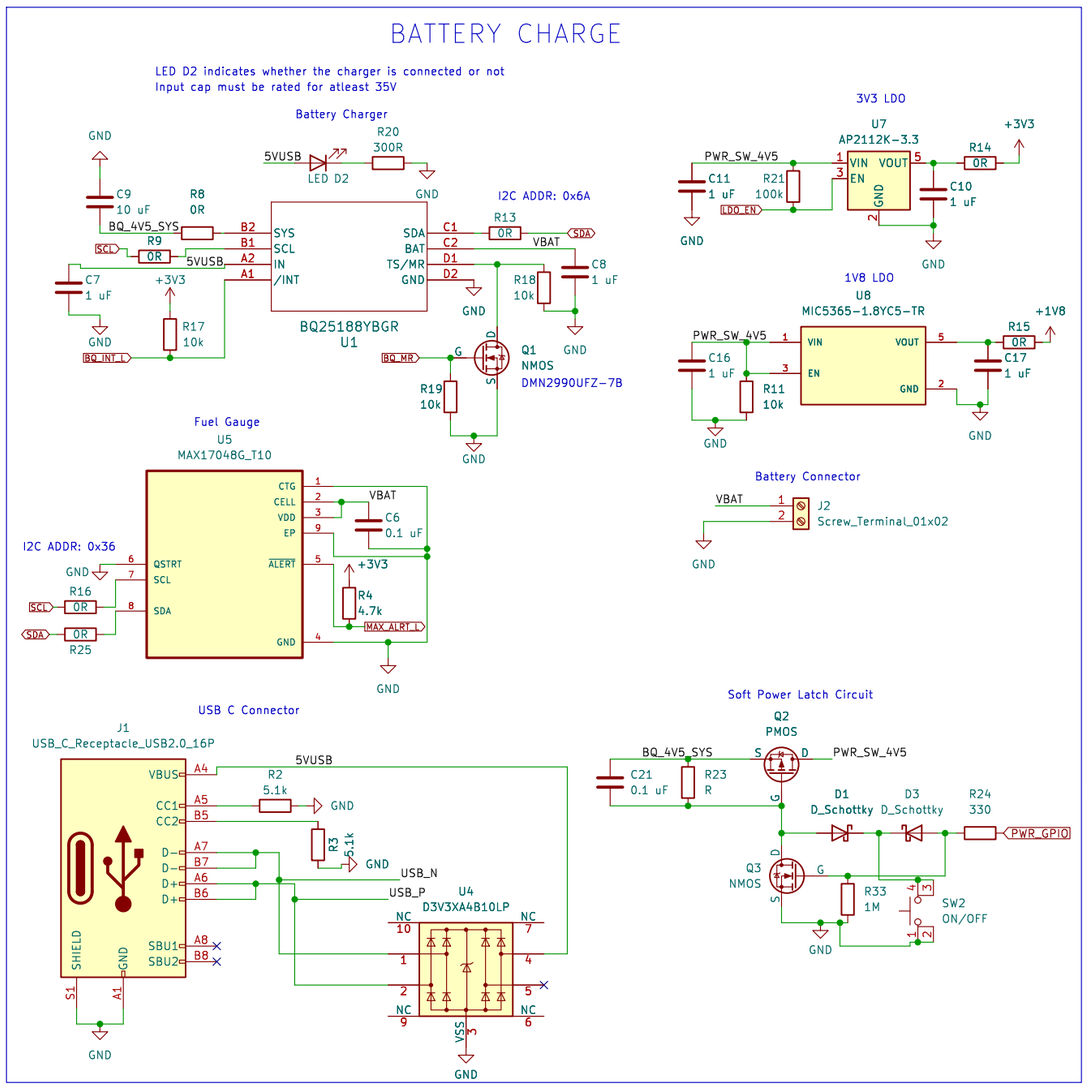

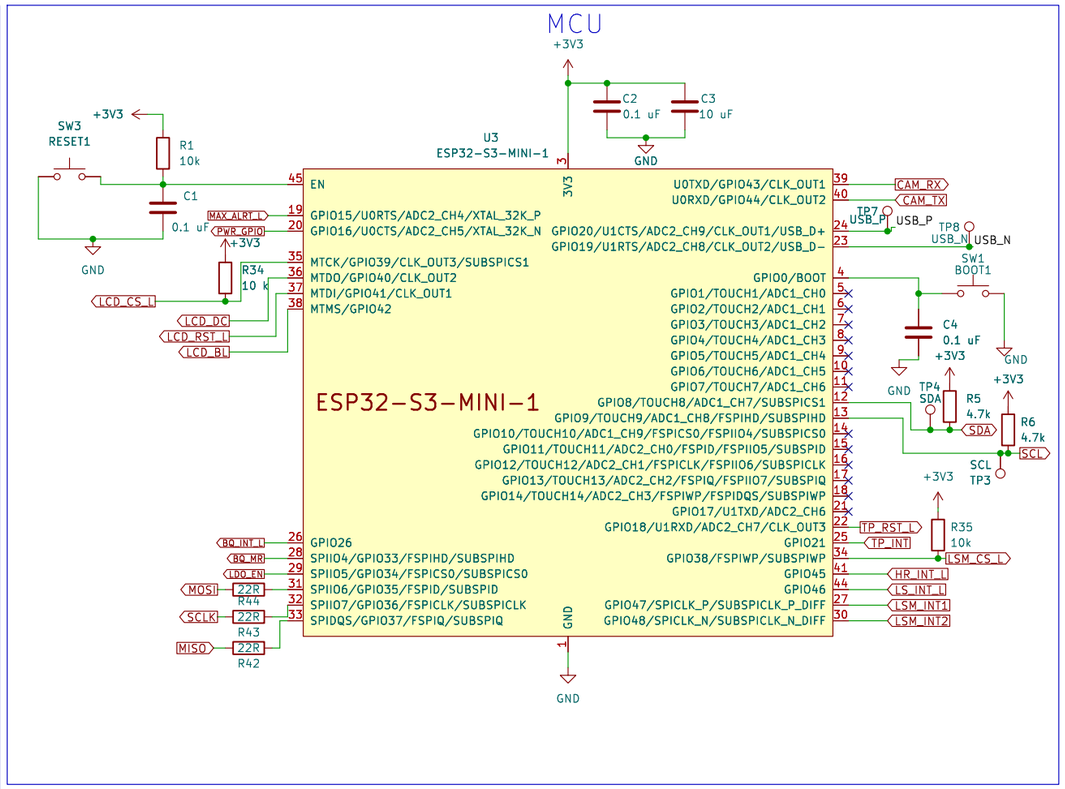

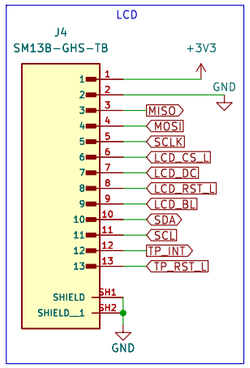

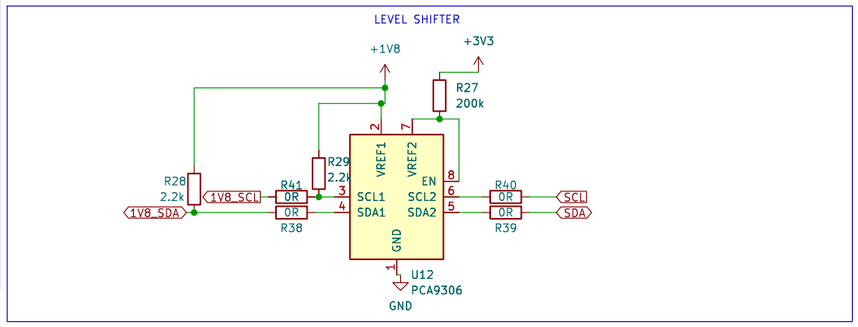

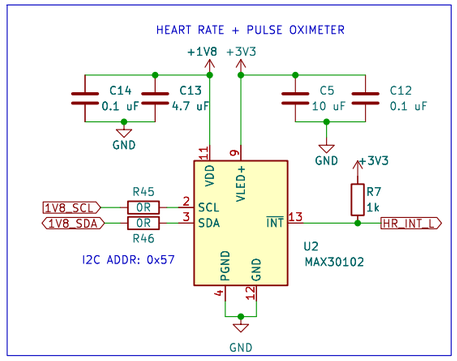

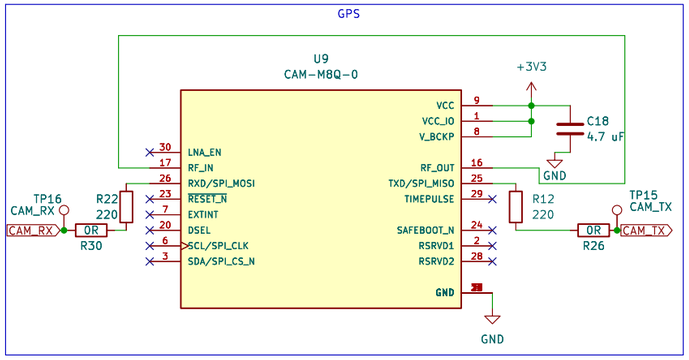

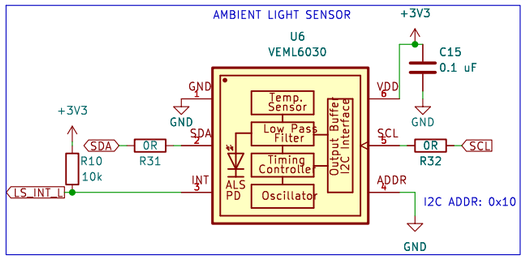

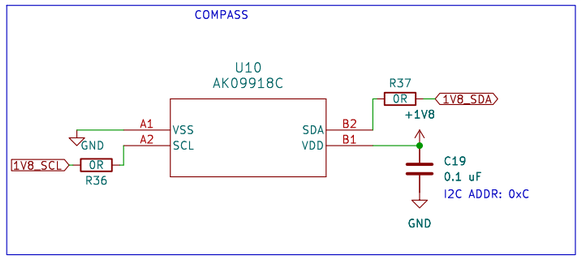

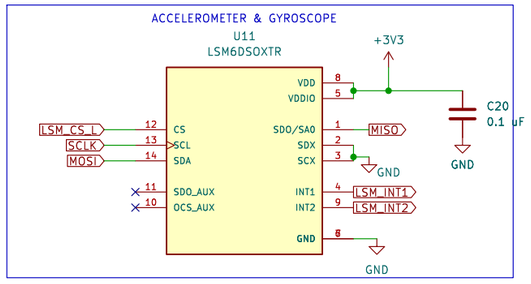

Aathithan Karunakaran

Sheet: /

File: Fitness_Tracker_PCB.kicad_sch

Title: Smartwatch PCB

Size: A3	Date: 03-05-2025	Rev: 1
KiCad E.D.A. kicad 7.0.10		Id: 1/1