Robustness Evaluation of a Low-Cost WSN for Satellite Ground-Truthing under Extreme Tropical Weather Events

Aayushman Das
Department of Electronics and Telecommunication Engineering
Jadavpur University
Kolkata, India
aayushmand.etce.ug@jadavpuruniversity.in

***Abstract*—Satellite missions like NASA's SMAP provide global soil moisture estimates but their 9km spatial resolution necessitates terrestrial validation. However, deploying low-cost Wireless Sensor Networks (WSNs) in tropical micro-climates presents significant reliability challenges. This paper evaluates the performance of an ESP32 based 5-node Wireless Sensor Network (WSN) during a hailstorm and subsequent thunderstorm events in West Bengal. Utilizing the ESP-NOW protocol and a triple-redundant data pipeline (OLED, SD, Cloud), we analyze system resilience and sensor recovery dynamics. Despite a high node attrition rate due to extreme precipitation, the framework maintained data continuity for critical reference nodes. Our findings hope to show that modularity and redundancy are vital for validation systems where environmental "failure points" define the boundaries of satellite-to-ground correlation.**

***Index Terms*—Wireless Sensor Networks, Ground-Truthing, ESP32, ESP-NOW, NASA SMAP, Soil Moisture, Triple Redundant Pipeline.**

I. Introduction

Satellite data is essential to contemporary environmental science however, its lack of spatial resolution restricts its use in small-scale farming. For example, NASA's SMAP mission usually yields a reading every 9 kilometers. Inaccurate averages for specific farm plots may result from this. There is a "trust-gap" in remote sensing for regional use, as evidenced by a local survey of over 50 respondents, which revealed that about 80% of users trust a local sensor more than a satellite reading. Reliable, inexpensive terrestrial systems are obviously needed to confirm what satellites are seeing from orbit [1].

Our goal at Jadavpur University is to develop high-precision research instruments on a tight budget. The objective is to achieve industrial-grade reliability without the expense of pricey commercial equipment, much like ISRO's inventiveness. Long-range work frequently uses protocols like LoRa, but each node needs extra hardware to use them. Rather, we improved the ESP-NOW protocol, which is integrated into the ESP32. We established a reliable link that can pass through four to five layers of reinforced concrete by utilizing 1 Mbps Long Range mode and high-gain SMA antennas at the hub.

While commercial agro-meteorological stations (e.g., Davis Vantage Pro2) offer high accuracy, their cost-per-node (>500 USD) makes high density urban deployment problematic [8]. Our ESP32-based architecture, costing $\approx$ 15 USD per node, provides a scalable alternative for capturing the high spatial variance of urban micro-climates [11].

The goal of this study is to determine the correlation error between orbital estimates and ground truth while evaluating the structural resilience of the WSN itself. The setup maintains its scientific validity even in the event of hardware or network disruptions by utilizing a triple redundant data pipeline (OLED, SD and Cloud). A unique aspect of this deployment was the occurrence of a severe hailstorm during the 14 day window, which turned the project into a stress test for low-cost hardware. Python is used to process the data and for filtering out hardware artifacts caused by moisture deposition. The source code and hardware design files are available at https://github.com/AayushmanDas/Agricultural-WSN-Ground-Truthing.

II. Methodology

A. Node Hardware Design and Power Management

The sensor nodes can function independently for extended periods of time in agricultural settings with high humidity. Each node is powered by a single 18650 Li-ion battery that is charged using a TP4056 module and a 6V 250mA solar panel. Power is controlled by an HT7333-A Low-Dropout (LDO) regulator, which was chosen for its extremely low quiescent current (4μA) to reduce current draw during inactive times. In order to save energy, the ESP32 uses a Deep Sleep cycle, sending data "chirps" every 30 minutes and staying in a low-power state the rest of the time.

The sensors consisted of a BME280, for atmospheric data and a capacitive soil moisture probe. The BME280 is configured for I2C communication, the CS pin is pulled high to force I2C mode, and the SDO pin is tied to 3.3V to lock the I2C address at 0x77. Soil moisture is monitored via an analog-to-digital converter (ADC) on GPIO 34 [4], [5]. A 25V rated voltage divider (7kΩ/10kΩ) provides battery telemetry, allowing the system to monitor charge cycles.

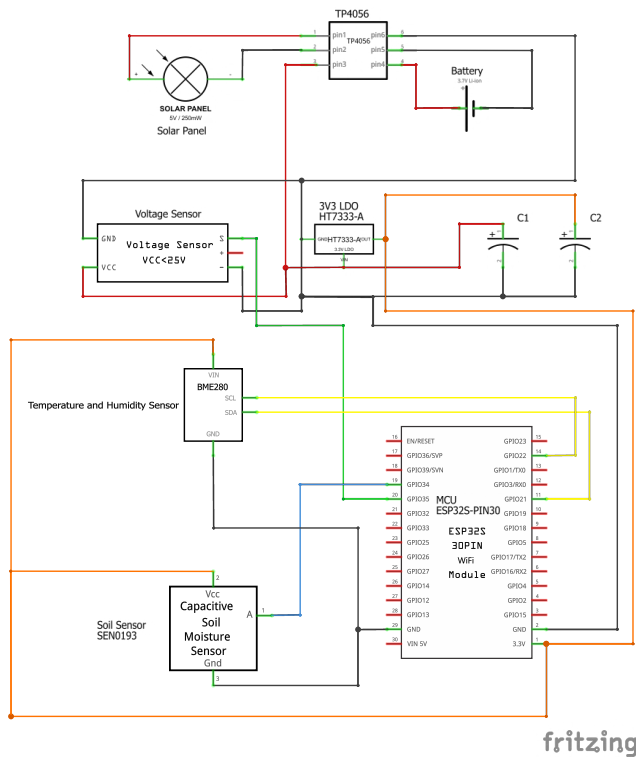

Fig. 1. Circuit diagram of the solar-powered sensor node. Key components include the HT7333-A LDO for low-quiescent current and the TP4056 charging module.

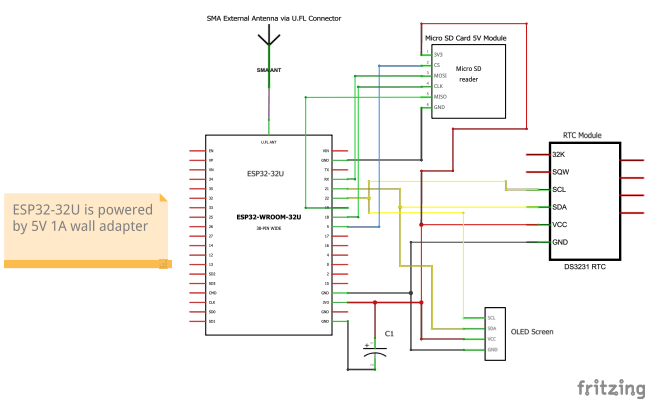

Fig. 2. Gateway (Hub) schematic illustrating the SPI interface for the SD module and the I2C bus sharing between the 0.96 inch SSD1306 OLED and DS3231 RTC module.

B. Gateway (Hub) Architecture and Redundancy

The hub serves as a link between the cloud and the local WSN. It has an 0.96 inch OLED for telemetry and a DS3231 Real Time Clock (RTC) Module to preserve time-stamping accuracy during power cycles. It is powered by a 5V micro USB supply. To avoid data loss during network outages, data is locally stored on an SPI-based SD card module.

A Triple Redundant Data Pipeline was used, aiming to improve data integrity. The Hub uploads a snapshot of the most recent data to a Supabase PostgreSQL database every three hours, but it gives priority to ESP-NOW packet reception. The WiFi stack only initialises if no node packets have been received in the previous 5-minute buffer, preventing radio interference.

C. Firmware Implementation and Time-Division Radio Multiplexing

It takes careful timing to manage two different radio protocols on the same 2.4 GHz antenna. It was necessary to use a *Time-Division Hardware Re-initialization* strategy because standard 802.11 WiFi and 1 Mbps Long Range ESP-NOW (fixed on Channel 1) cannot work at the same time without losing a ton of packets [3]. The Hub's default setting is to keep an active ESP-NOW listening state. When the three-hour cloud-sync timer goes off, the firmware does a *Complete Radio De-initialization*. This clears the ESP-NOW stack from memory and sets up the hardware registers for a standard WiFi handshake. The *ArduinoJson* library serialises the data, and an asynchronous HTTP POST request sends it to the Supabase REST API. Once a "200 OK" response is verified, the WiFi stack is terminated, and the radio is recalibrated back to its high gain ESP-NOW state.

D. Enclosure and Environmental Ruggedization

The Hub enclosure was modeled in Fusion 360 and 3D printed using PLA material (20% infill, 78g). The field nodes are placed in IP65-rated enclosures. To withstand the humid climate, all wire entry points were sealed with neutral silicone sealant and hot glue. A semi permeable vent was placed at the base of each box to allow airflow for the BME280 while blocking entry of insects like ants and spiders.

The capacitive soil sensors underwent a "potting" process, where exposed surface-mount components were coated in silicone to prevent oxidation. Nodes were deployed with the enclosures elevated *0.5m* above the ground to improve **Fresnel** zone clearance.

E. Deployment and Field Observation

In order to track a 14 day cycle, the system was installed in a home garden in Kolkata, West Bengal. Nodes were positioned *0.5m* above the ground, in order to improve link quality. The network's average *Received Signal Strength Indicator (RSSI)* was consistently between -80 to -85 dBm, according to real time telemetry on the Hub's OLED interface.

The optimized 1 Mbps Long Range mode maintained a stable link despite the highly resistive path to Node 4, which required diagonal signal penetration through approximately 0.8m of reinforced concrete. A modular hardware design facilitated rapid field recovery following a mechanical impact on Node 1 during the initial deployment. While the impact compromised the soil probe and voltage divider, the digital I2C atmospheric sensor remained operational. This incident led to a design iteration where all node mounting points were secondary reinforced with fasteners, increasing the structural damping of the enclosures for the remainder of the study.

F. Environmental Stress and Node Attrition

The 14-day observational window was characterized by significant meteorological volatility, including a localized hailstorm on March 26, 2026, followed by recurring thunderstorms. These events resulted in a 60% network attrition rate, providing a natural stress-test for the system. Node 1 experienced terminal power failure, while Nodes 3 and 4 showed oscillator stall issues, a state where moisture deposition on the capacitive sensor heads shifts the resonant frequency beyond operational bounds. Conversely, Node 2 (elevated at 1.5m) and Node 5 (terrace-mounted) maintained data continuity. This suggests that high-ventilation placement is more critical for long term IP65 enclosure integrity than physical shielding, as the sheltered nodes suffered from moisture trapping and prolonged humidity exposure.

III. Data Post-Processing and Analytics

A. Heuristic Noise Reduction and Outlier Filtering

Raw field data from the WSN exhibited significant stochastic noise, primarily attributed to high-frequency dielectric fluctuations during extreme precipitation. To ensure scientific integrity, a multi-stage Python-based cleaning pipeline was implemented.

- *Hard-Clamp Filter:* A signal-to-physical range mapping was applied to moisture readings. Values below 30% (designating dry-air reference) and above 100% (saturation) were designated as null (NaN). This eliminated hardware-induced transients and ADC jitter caused by supply voltage fluctuations during solar charging cycles.
- *Stale-Data Detector:* To identify sensor freezing, a rolling standard deviation filter monitored readings over a 6 hour window (12 samples). Any node exhibiting zero variance ($\sigma = 0$) was flagged as an oscillator stall and excluded. This condition typically occurs when moisture deposition on the capacitive sensor head shifts the resonant frequency beyond the operational bounds of the internal timer circuit.
- *Timestamp Correction:* Due to the absence of a global clock on individual nodes, temporal drift was corrected by the Hub's DS3231 RTC. Records with corrupted Unix timestamps (e.g., year 2045 artifacts) were re-mapped based on the sequential index of the SD card logs.

B. Spatial-Temporal Alignment with Orbital Products

NASA SMAP (Level-3 Passive) data provides a singular daily estimate at a 9km spatial resolution. Conversely, the WSN provided 48 samples per day (30-minute chirps). To allow for cross-validation, the WSN dataset was down sampled using a nearest neighbor temporal join to the specific overpass timestamp provided in the SMAP metadata [2]. This attempts to ensure that ground-truth data reflected the exact soil state at the moment of orbital sensing.

IV. Experimental Results and Discussion

A. Network Resilience and Attrition Dynamics

As illustrated in Fig. 3, the network faced severe environmental stress during the localized hailstorm on March 26, 2026. While Nodes 1, 3, and 4 suffered hardware failure, Node 2 and Node 5 maintained continuity.

This disparity in survival provides critical insights into urban WSN deployment. Nodes 3 and 4 were "sheltered" under a canopy, which paradoxically led to their failure, the canopy trapped high humidity and slowed evaporation, leading to prolonged moisture deposition in the enclosures. Conversely, Node 2 (elevated at 1.5m) and Node 5 (terrace-mounted) benefited from higher wind velocity and ventilation, which facilitated rapid drying of the external housing. This suggests that for tropical WSNs, ventilation is a more effective strategy than physical shielding for long term use cases.

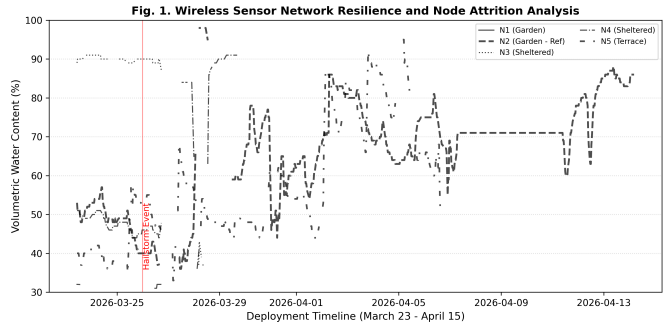

Fig. 3. WSN Attrition Analysis: Visualization of node failure points relative to the March 26 hailstorm ingress. Discontinuities represent data cleaning via the stale-data filter.

B. Vertical Microclimate Variance

A significant moisture gradient was observed between ground-level (Node 2) and terrace-level (Node 5) deployments (Fig. 4). While both nodes recorded a saturation spike during the hailstorm, Node 5 exhibited a steeper drying slope ($m \approx -4.2\%/day$).

This confirms that urban verticality influences moisture retention. High-elevation "pockets" (terraces) experience different evaporative microclimates than ground-level gardens. Because satellite sensors (9km pixels) average these heights into a single value, they fail to resolve the distinct hydrological behaviors required for precision urban agricultural management.

C. Satellite Validation and the 'Urban Bias' Gap

The cross-validation against NASA SMAP (Fig. 5) yielded an RMSE of 39.30% and a correlation of -0.33. While these metrics initially suggest failure, in an urban context they highlight the *Urban Resolution Gap* [10]. The 9km SMAP footprint averages vast non-porous surfaces, resulting in a mean estimate (29.72%) that significantly underestimates localized vegetative hotspots (65.40%). The negative correlation further underscores the impact of anthropogenic factors, such

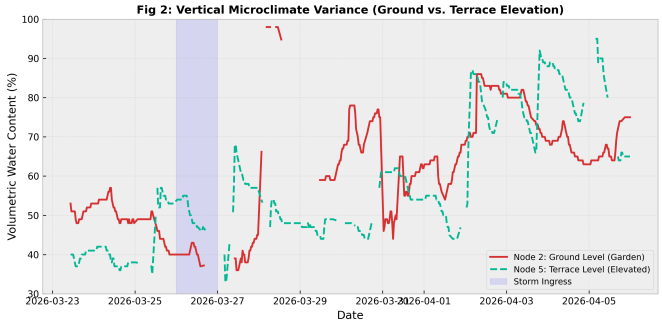

Fig. 4. Vertical Microclimate Variance: Comparing Ground-Truth (Node 2) vs. Terrace-Level (Node 5) moisture retention dynamics.

as the shaded, manually-watered container at Node 5, which orbital sensors cannot resolve [7].

TABLE I
WSN VS. NASA SMAP ACCURACY METRICS SUMMARY

Metric	Value	Engineering Significance
RMSE (%)	39.30%	Evidence of Spatial Averaging Bias
Trend Correlation (ρ)	-0.33	Anthropogenic/Microclimate Decoupling
Mean WSN Value	65.40%	High-Resolution In-Situ Ground Truth
Mean SMAP Value	29.72%	Regional Coarse-Resolution Average

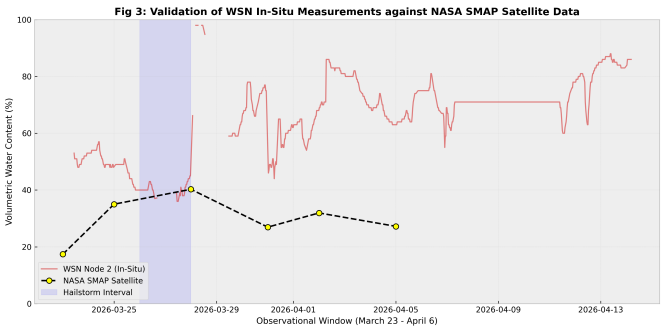

Fig. 5. In-Situ WSN vs. NASA SMAP: High RMSE highlights the Underestimation Bias in satellite products for urban vegetative hotspots.

V. LIMITATIONS AND FUTURE WORK

A. Study Limitations

We acknowledge that as a student led pilot study, the deployment scale was limited to five nodes within a specific residential microclimate. The 2 week observational window, while providing intense data during a hailstorm, may not capture long term seasonal shifts. Furthermore, the high attrition rate (60%) underscores that current low-cost IP65 enclosures require additional mechanical reinforcement to serve as permanent infrastructure in volatile tropical regions.

B. Concluding Remarks

Despite scale constraints, the surviving nodes exposed a critical underestimation bias in NASA's SMAP product. Terrestrial WSNs proved to be essential corrective layers for achieving hydrological accuracy in urban centers where satellite pixels fail to resolve irrigation and verticality [6].

C. Future Research Directions

The results of this deployment establish a foundation for several engineering advancements:

- **NISAR Integration:** Future validation will prioritize NISAR's high-resolution radar data to investigate if SAR products can bridge the 39.3% accuracy gap [9].
- **Hardware Ruggedization:** Testing superhydrophobic nano-coatings on enclosure vents to prevent moisture-induced frequency stalls.
- **Edge-AI Implementation:** Porting cleaning algorithms directly onto the ESP32 using TinyML for on-device autonomous outlier handling.
- **Hybrid Power Management:** Utilizing supercapacitor-battery hybrids to ensure 100% operational uptime, especially during monsoon periods.

ACKNOWLEDGMENT

The author acknowledges the use of Gemini and Claude for technical language refinement and LaTeX formatting. All research design, hardware development, data collection, and final analysis were performed independently by the author, who assumes full responsibility for the manuscript's content.

REFERENCES

[1] D. Entekhabi et al., "The Soil Moisture Active and Passive (SMAP) mission," *Proceedings of the IEEE*, vol. 98, no. 5, pp. 704–716, May 2010, doi: 10.1109/JPROC.2010.2043918.

[2] A. Colliander et al., "Validation of SMAP surface soil moisture products with core validation sites," *Remote Sensing of Environment*, vol. 191, pp. 215–231, 2017, doi: 10.1016/j.rse.2017.01.021.

[3] Espressif Systems, "RF Coexistence," *ESP-IDF Programming Guide*, Espressif Systems (Shanghai) Co., Ltd., 2023. [Online]. Available: https://docs.espressif.com/projects/esp-idf/en/stable/esp32/api-guides/coexist.html

[4] A. A. Abdelmoneim, C. M. Al Kalaany, R. Khadra, B. Derardja, and G. Dragonetti, "Calibration of Low-Cost Capacitive Soil Moisture Sensors for Irrigation Management Applications," *Sensors*, vol. 25, no. 2, p. 343, Jan. 2025, doi: 10.3390/s25020343.

[5] P. Placidi, L. Gasperini, A. Grassi, M. Cecconi, and A. Scorzoni, "Characterization of Low-Cost Capacitive Soil Moisture Sensors for IoT Networks," *Sensors*, vol. 20, no. 12, p. 3585, Jun. 2020, doi: 10.3390/s20123585.

[6] L. Brocca, L. Ciabatta, C. Massari, S. Camici, and A. Tarpanelli, "Soil Moisture for Hydrological Applications: Open Questions and New Opportunities," *Water*, vol. 9, no. 2, p. 140, 2017, doi: 10.3390/w9020140.

[7] NASA SMAP Science Document No. 046, "SMAP Ancillary Data Report: Urban Area," Jet Propulsion Laboratory, Pasadena, CA, USA, Tech. Rep., 2014. [Online]. Available: https://smap.jpl.nasa.gov/

[8] N. Ahmad, A. Hussain, I. Ullah, and B. H. Zaidi, "IOT based Wireless Sensor Network for Precision Agriculture," in *Proc. iEECON*, 2019, pp. 1–4, doi: 10.1109/iEECON45304.2019.8938854.

[9] P. Rosen et al., "The NASA-ISRO SAR Mission: A summary," *IEEE Geosci. Remote Sens. Mag.*, 2025, doi: 10.1109/MGRS.2025.3578258.

[10] W. Liu et al., "Validation of Four Satellite-Derived Soil Moisture Products Using Ground-Based In Situ Observations over Northern China," *Remote Sens.*, vol. 14, no. 6, p. 1419, 2022, doi: 10.3390/rs14061419.

[11] S. Majumder et al., "Assessing Low-cost Capacitive Soil Moisture Sensors: Accurate, Affordable, and IoT-ready Solutions for Soil Moisture Monitoring," *Int. J. Environ. Clim. Change*, vol. 13, no. 11, pp. 2233–2242, 2023, doi: 10.9734/ijecc/2023/v13i113386.