Bridging Offline-Online

Yash Rampuria

Problem

- **The Challenge:** Transitioning from offline pre-training (BC) to online adaptation (RL) is hindered by high-dimensional action spaces where random exploration rarely discovers success.

- **Current Limits:** In complex tasks, sparse rewards provide no gradient for improvement during early training.

- **Significance:** We address the exploration bottleneck by investigating reward densification strategies from manual heuristics to Vision-Language Models (VLMs).

Learning with Intelligent

Tushar Aggarwal

Background

- **Task:** Evaluation on the robomimic "Lift" benchmark, requiring a Franka Panda robot to grasp and lift a cube to target height.

- **State space:** RGB images, joint states, object coordinates
  Action space: 7-DoF continuous (EEF position + gripper).

- **Pipeline:** Policies are pre-trained via Behavioral Cloning (BC) on human demonstrations before transitioning to online Reinforcement Learning (RL) refinement.

Reward Shaping

Abhijnya Bhat

Conclusion

- While PPO with sparse rewards fails entirely (0% success rate), we demonstrate that using dense rewards as signals while training PPO significantly improves the performance.

- This improvement in performance can be attributed to critical gradients necessary for transformation from offline pre-training to online mastery.

- We evaluated three distinct reward densification architectures to address the exploration bottleneck

1. Heuristic-Based Reward

$$r = -w_2 \cdot \left\| p_{\text{eef}} - p_{\text{cube}} \right\| + w_2 \cdot \left(h_{\text{cube}} - h_{\text{table}} \right)$$

2. Curriculum-Based Reward

- Decomposes the task into meaningful sub-skills, approaching the cube (XY and Z alignment), orienting the gripper downward and along the cube's long axis, closing the gripper when properly positioned, and lifting the cube
- Smoothly shaped rewards (using exponentials and soft gating) so the agent receives useful feedback even before completing the full task
- Later-stage rewards are scaled by how well earlier stages are satisfied. Intermediate skills improve exploration and sample efficiency

Method

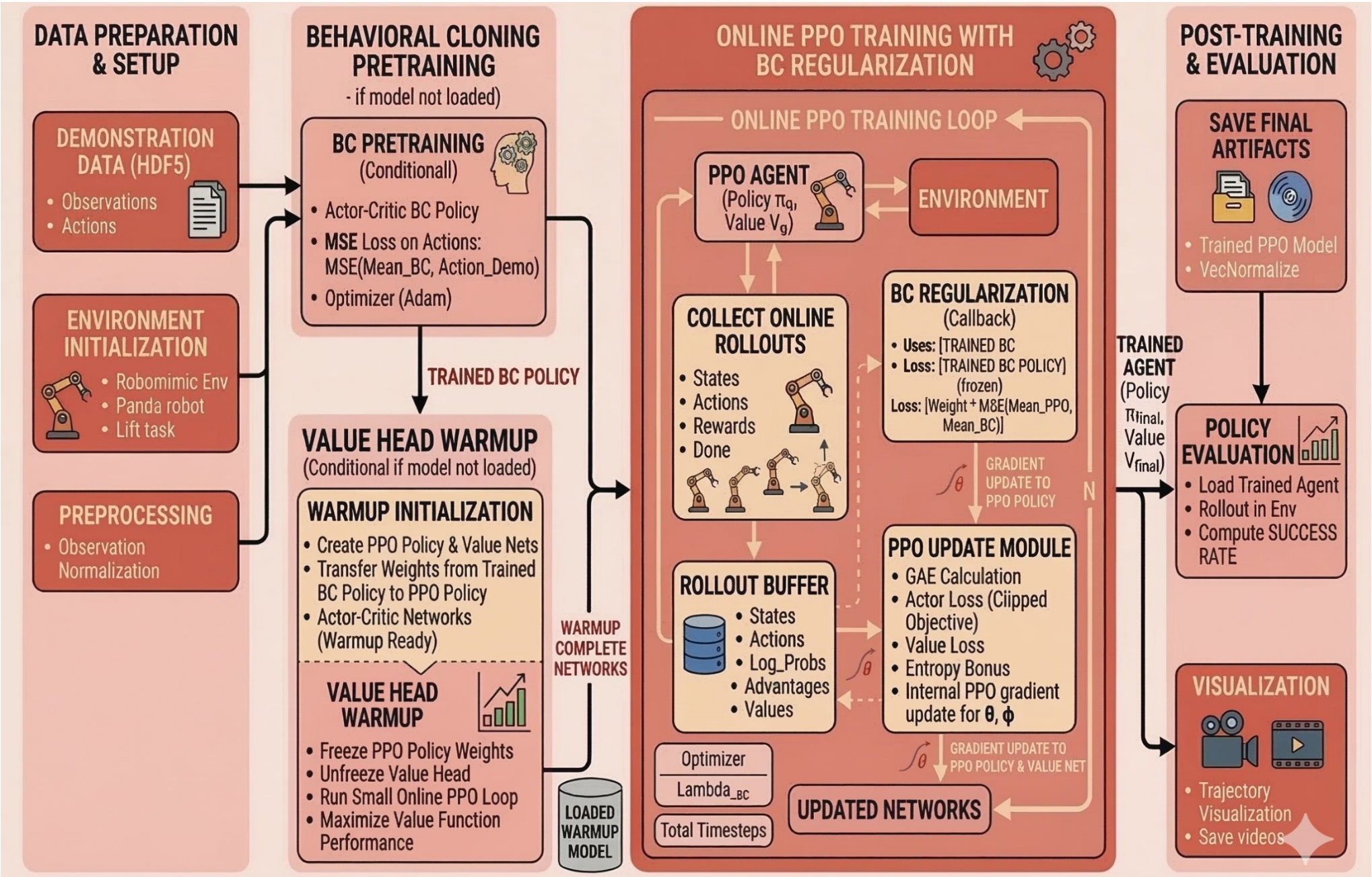
DATA PREPARATION & SETUP
DEMONSTRATION DATA (HDF5)
• Observations
• Actions
ENVIRONMENT INITIALIZATION
• Robomimic Env
• Panda robot
• Lift task
PREPROCESSING
• Observation Normalization
BEHAVIORAL CLONING PRETRAINING
- if model not loaded)
BC PRETRAINING
(Conditionall)
• Actor-Critic BC Policy
• MSE Loss on Actions: MSE(Mean_BC, Action_Demo)
• Optimizer (Adam)
TRAINED BC POLICY
VALUE HEAD WARMUP
(Conditional if model not loaded)
WARMUP INITIALIZATION
• Create PPO Policy & Value Nets
• Transfer Weights from Trained BC Policy to PPO Policy
• Actor-Critic Networks (Warmup Ready)
VALUE HEAD WARMUP
• Freeze PPO Policy Weights
• Unfreeze Value Head
• Run Small Online PPO Loop
• Maximize Value Function Performance
WARMUP COMPLETE NETWORKS
LOADED WARMUP MODEL
ONLINE PPO TRAINING WITH BC REGULARIZATION
ONLINE PPO TRAINING LOOP
PPO AGENT
(Policy π_θ, Value V_ϕ)
ENVIRONMENT
COLLECT ONLINE ROLLOUTS
• States
• Actions
• Rewards
• Done
BC REGULARIZATION
(Callback)
• Uses: [TRAINED BC
• Loss: [TRAINED BC POLICY] (frozen)
Loss: [Weight * M&E(Mean_PPO, Mean_BC)]
GRADIENT UPDATE TO PPO POLICY
N
ROLLOUT BUFFER
• States
• Actions
• Log_Probs
• Advantages
• Values
PPO UPDATE MODULE
• GAE Calculation
• Actor Loss (Clipped Objective)
• Value Loss
• Entropy Bonus
• Internal PPO gradient update for θ, ϕ
GRADIENT UPDATE TO PPO POLICY & VALUE NET
Optimizer
Lambda_BC
Total Timesteps
UPDATED NETWORKS
TRAINED AGENT
(Policy π_{final}, Value V_{final})
POST-TRAINING & EVALUATION
SAVE FINAL ARTIFACTS
• Trained PPO Model
• VecNormalize
POLICY EVALUATION
• Load Trained Agent
• Rollout in Env
• Compute SUCCESS RATE
VISUALIZATION
• Trajectory Visualization
• Save videos

3. VLM-Based Reward

To solve the Grasp-Lifting Gap, we also tried using a **VLM as an Evaluator** (Claude-4.6) to generate rewards. This makes the reward logic more generalizable and requires lesser manual function generation.

- **Temporal Context:** VLM observes 6 frames (past, current, future) to understand intent.
- **Semantic Scoring:** A rubric-based reward (0 - 100) based on physical milestones (Approach -> Grasp -> Lift).
- **Proxy Training:** We fine-tune a ResNet-50 (R3M-initialized) to predict VLM scores, creating a high-speed reward regressor for RL training.

Experimental

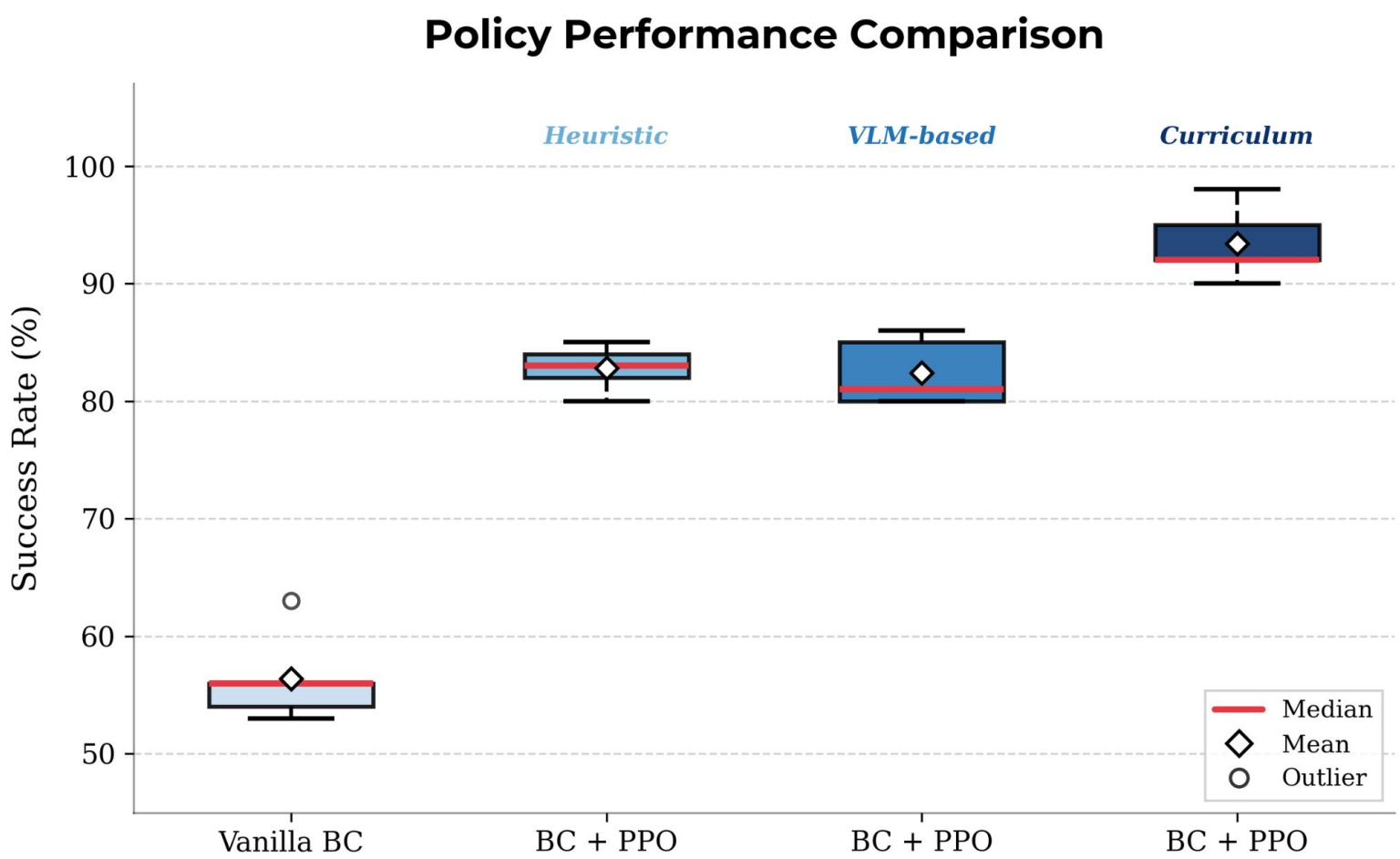

VLM reward: **85 (high)**

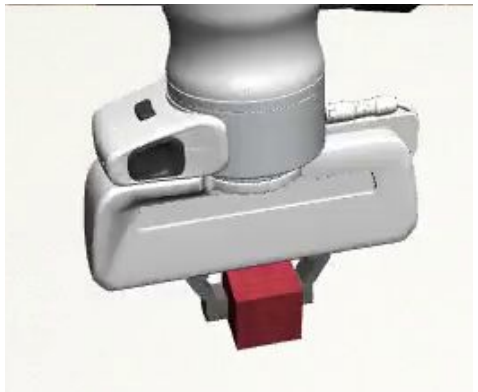

VLM reward: **- 98 (low)**

Reward hacking: For simple rewards and high horizons, the robot learnt to linger around without lifting / tosses the cube into the air by hitting on it's edge. This was mitigated by curriculum-based rewards

Results

In low-data regimes, while **Vanilla BC plateaus** at suboptimal levels, **PPO with Dense Rewards** successfully breaks the performance ceiling by enabling effective online refinement.

Combined value head warmup and decayed BC regularization prevented catastrophic forgetting, outperforming imitation or RL alone and proving that anchoring online updates with expert priors ensures superior stability.

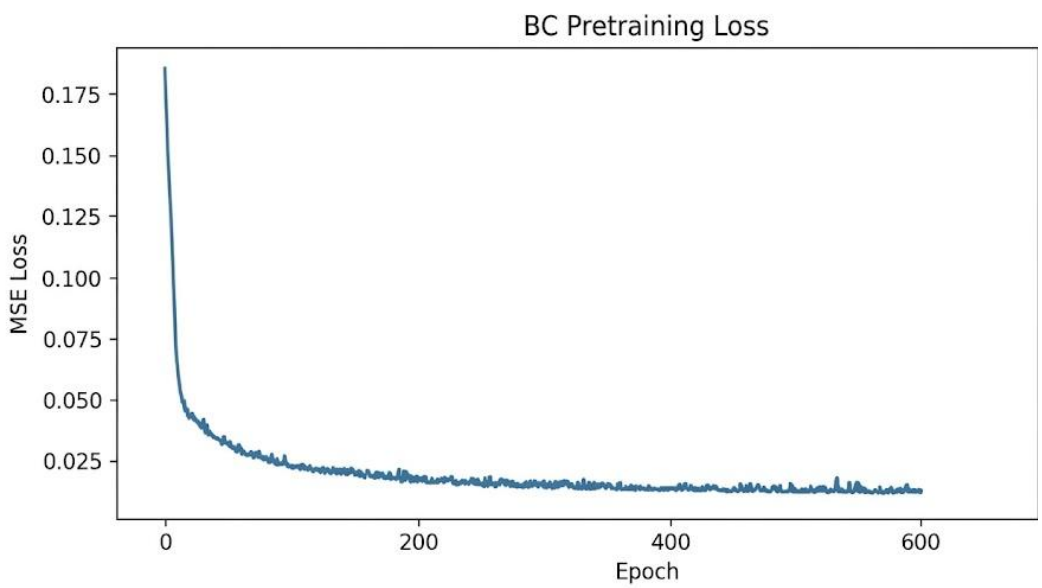

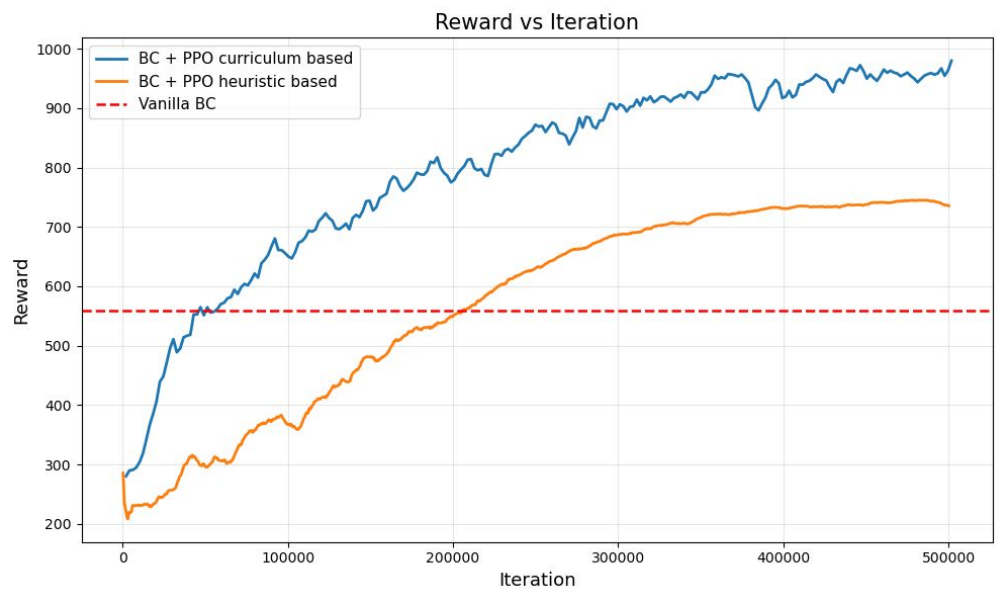

Analysis

	Vanilla BC	Sparse PPO	Heuristic PPO	VLM PPO	Curriculum PPO
Success Rate	**56.4 +/- 3.44 %**	**56.4 +/- 3.44 %**	**82.8 +/- 1.83 %**	**82.4 +/- 2.42 %**	**93.4 +/- 2.97 %**
Reward	**559.8 +/- 39.14**	**559.8 +/- 39.14**	**824.0 +/- 19.14**	**820.6 +/- 28.27**	**931.0 +/- 31.30**

While PPO fine-tuning with sparse rewards provides no improvement over BC, dense rewards allow the policy to efficiently explore areas of higher success probability

Curriculum Rewards outperformed VLM-based signals due to three primary factors:

- **Precision Gap:** As a high-level observer, VLM lacks the precision required for successful physical grasping
- **Signal Noise:** VLM rewards are inherently noisy due to occlusion and perspective sensitivity during manipulation.