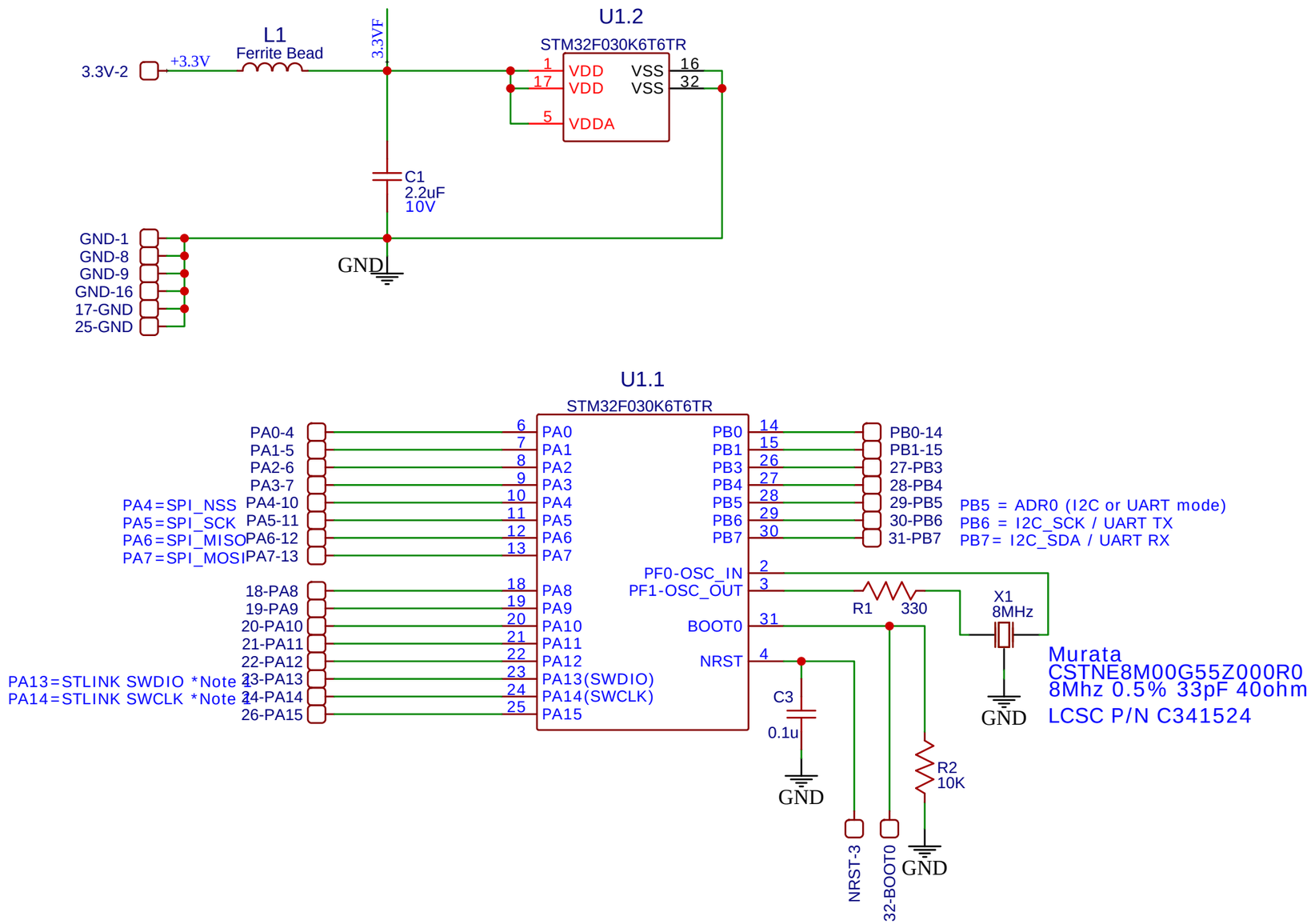

NOTES:

1) PA13 & PA14 used to connect to optional ST-LINK programmer.

TITLE: ABBY IOX CO-PROCESSOR MODULE		REV: 1.1
嘉立创EDA	Company: ABBYCUS	Sheet: 1/1
	Date: 2022-11-30 Drawn By: johnny49r	