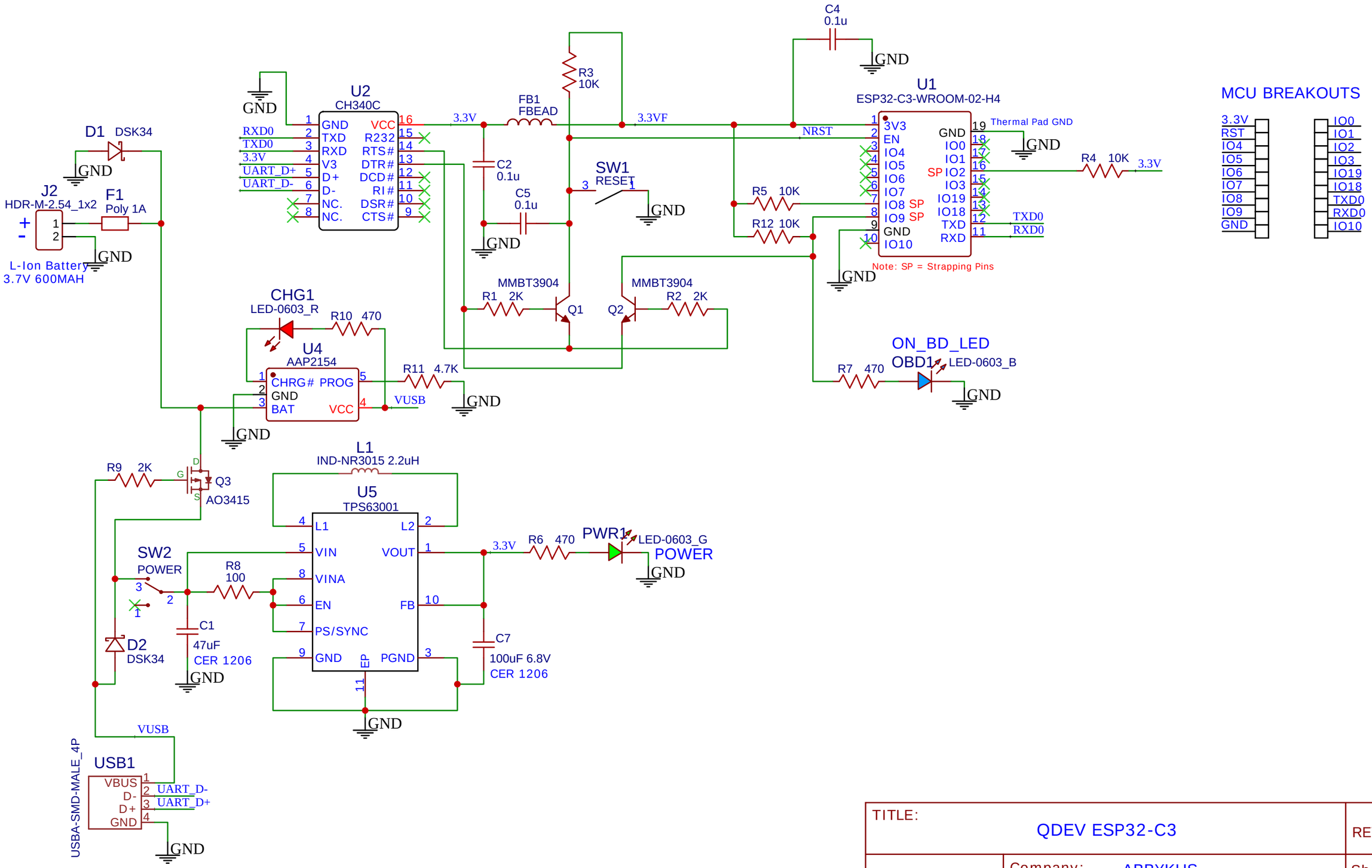

TITLE: QDEV ESP32-C3		REV: 1.0
EasyEDA	Company: ABBYKUS	Sheet: 1/1
	Date: 2022-02-11 Drawn By: J. Hoeppner	