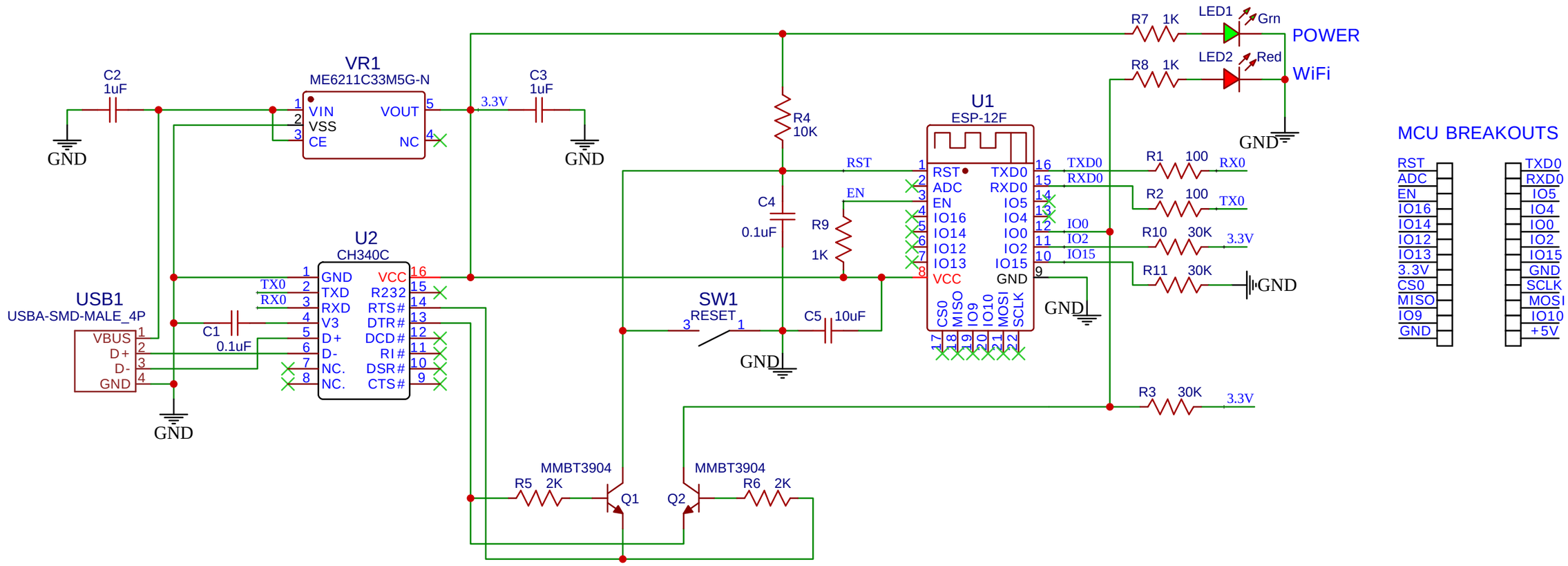

TITLE: QDEV ESP8266		REV: 1.2
EasyEDA	Company ABBYKUS	Sheet: 1/1
	Date: 2022-02-12	Drawn By: johnny49r