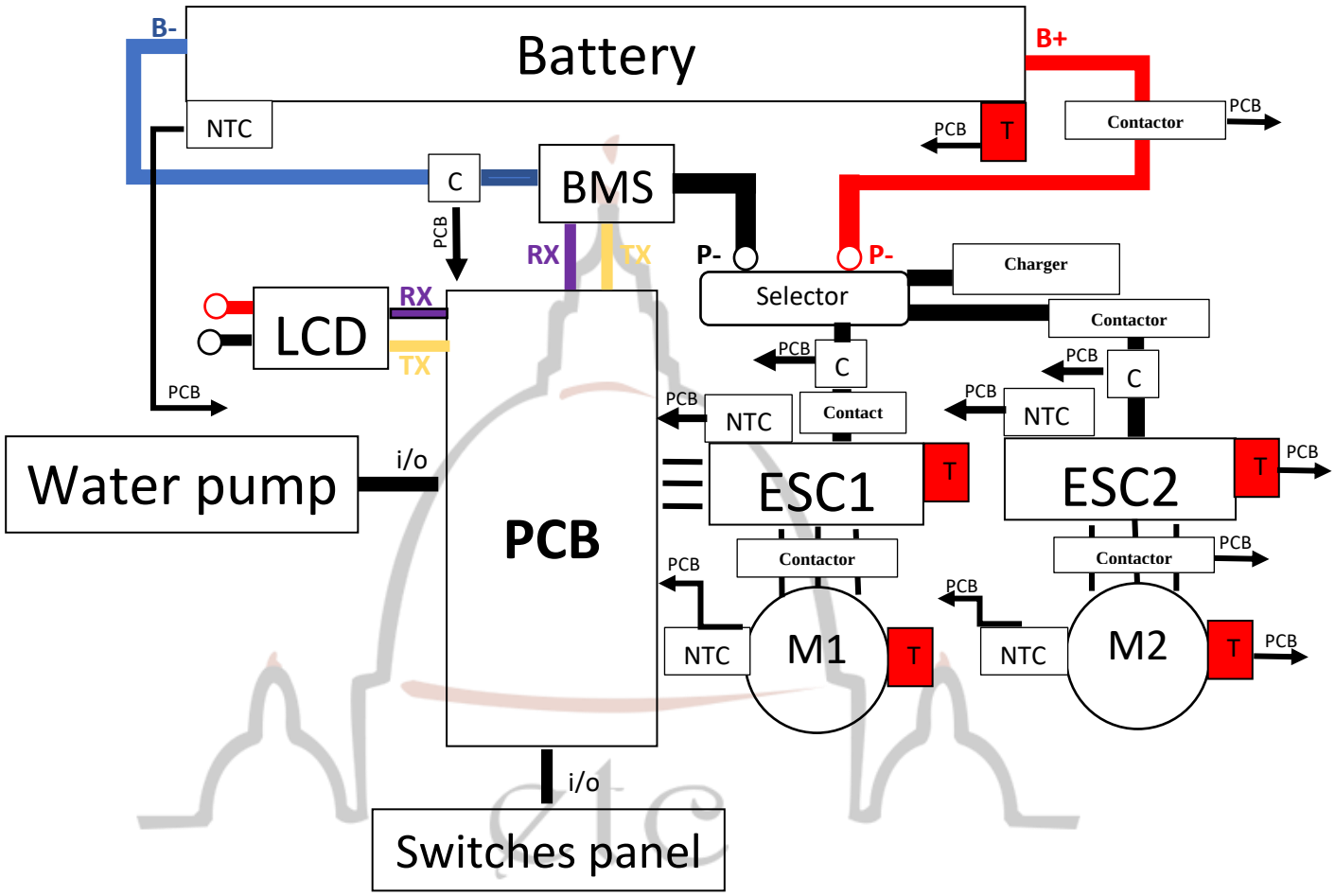

electronic technical castle