Removing Power Line Interference from ECG Signal Using Adaptive Filter and Notch Filter

Noureddin Etkaidek
Department of Electrical and Computer Engineering
Birzeit University
Ramallah, Palestine
1220162

Abdallah Kokash
Department of Electrical and Computer Engineering
Birzeit University
Ramallah, Palestine
1220116

***Abstract*—This study investigates the performance of four filters—normalized least-mean-square (NLMS), recursive least-square (RLS), affine projection algorithm (APA), and a traditional notch filter—for removing power line interference from ECG signals. The analysis is conducted in both time and frequency domains, supported by power spectral density (PSD) and spectrogram visualizations. Key performance metrics, including signal-to-noise ratio (SNR), percent root-mean-square difference (%PRD), and mean squared error (MSE), are used for evaluation. Real-time ECG data from the MIT-BIH arrhythmia database serves as the benchmark dataset. Results demonstrate that the APA adaptive filter outperforms all other methods, achieving superior interference suppression and performance metrics.**

***Index Terms*—ECG signal; power line interference; adaptive NLMS filter; PSD; spectrogram; APA filter.**

I. Introduction

The ECG signal is an essential tool for diagnosing and monitoring various cardiac conditions. However, recorded ECG signals are often contaminated by several types of noise, including power line interference, baseline drift, electrode contact issues, motion artifacts, muscle activity, instrumentation noise, and electro-surgical disturbances [1]. Among these, 50 Hz power line interference is the most prominent, as it falls within the ECG signal frequency range (0.05–100 Hz). This interference significantly impacts the ST segment of the ECG signal, leading to complications in diagnosing arrhythmia. Therefore, removing 50 Hz power line noise is critical to ensure accurate and reliable ECG readings.

Several digital filtering techniques, such as FIR and IIR filters, have been employed to address this issue [2]-[4]. However, due to the non-stationary nature of ECG signals, filters with fixed coefficients often struggle to effectively suppress this interference. Adaptive filtering has gained widespread recognition as an effective and flexible approach for processing non-stationary biomedical signals like ECG [5]-[7]. Among these, the least mean square (LMS) algorithm and its variations, such as the normalized LMS (NLMS) and affine projection algorithm (APA), have shown promising results in mitigating noise.

In prior research [8], the NLMS adaptive filter was identified as highly effective in suppressing 50 Hz power line interference compared to other LMS-based filters. In this study, the performance of the APA filter is also explored alongside traditional notch filtering [9], adaptive RLS filtering [5], and the NLMS filter. Simulation results reveal that the APA filter consistently delivers superior performance, surpassing even the NLMS filter in noise reduction efficiency and overall performance.

II. Materials and Methods

This study investigated different filtering techniques to remove 50 Hz power line interference from ECG signals. Clean ECG data were sourced from the MIT-BIH Arrhythmia Database (record 106). Using MATLAB®, a sinusoidal 50 Hz interference signal was generated and added to the clean ECG signals to create noisy ECG signals, simulating conditions often encountered in real-world scenarios.

Four filtering methods were used to remove the interference. A traditional notch filter provided a fixed-frequency approach to attenuate the 50 Hz component. The Normalized Least Mean Square (NLMS) filter dynamically adjusted its coefficients for non-stationary signals, while the Recursive Least Squares (RLS) filter offered fast convergence but required more computation. The affine projection algorithm (APA) filter was also evaluated, showing improved noise suppression capabilities and competitive computational requirements. Figure 1 shows the block diagram of the notch and adaptive filters.

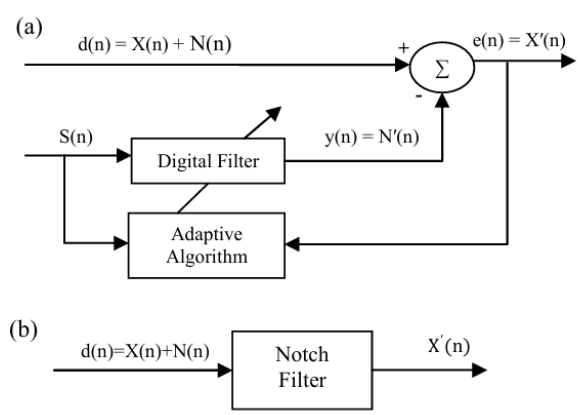

Fig. 1. Principles of (a) adaptive and (b) notch filters.

The performance of each filtering technique was assessed using several metrics, including signal-to-noise ratio (SNR), percentage root mean square difference (%PRD), and mean square error (MSE). The noisy and filtered ECG signals were analyzed in both time and frequency domains. Simulations were conducted in MATLAB®, leveraging its Signal Processing Toolbox for implementation and analysis.

III. RESULTS AND DISCUSSION

The study utilizes 13-bit real data from four patients in the MIT-BIH arrhythmia database. Among these, patient record #106 is selected as the reference for analysis and output generation. The same procedure can be applied to data from other patients. A 50 Hz power line interference (noise signal) is simulated alongside the patient's ECG data. By combining these signals, a noisy ECG signal is generated. This signal is then processed using four filtering methods: a notch filter, an adaptive RLS filter, an adaptive NLMS filter, and an APA filter.

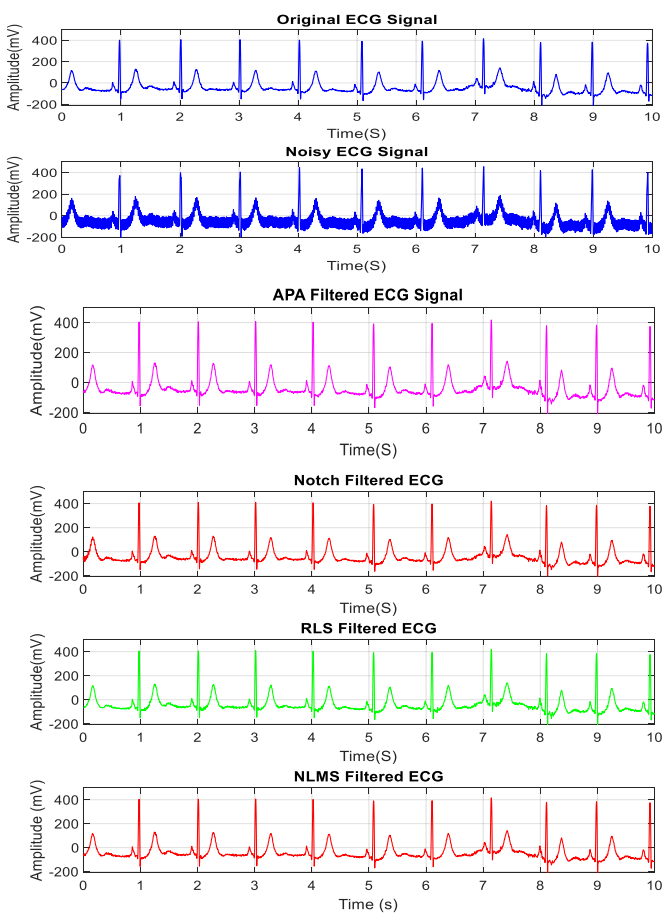

Fig. 2. Time domain graphical representation of removing power line interference using a notch filter, an adaptive RLS filter, an adaptive NLMS filter, and an APA adaptive filter (record #106).

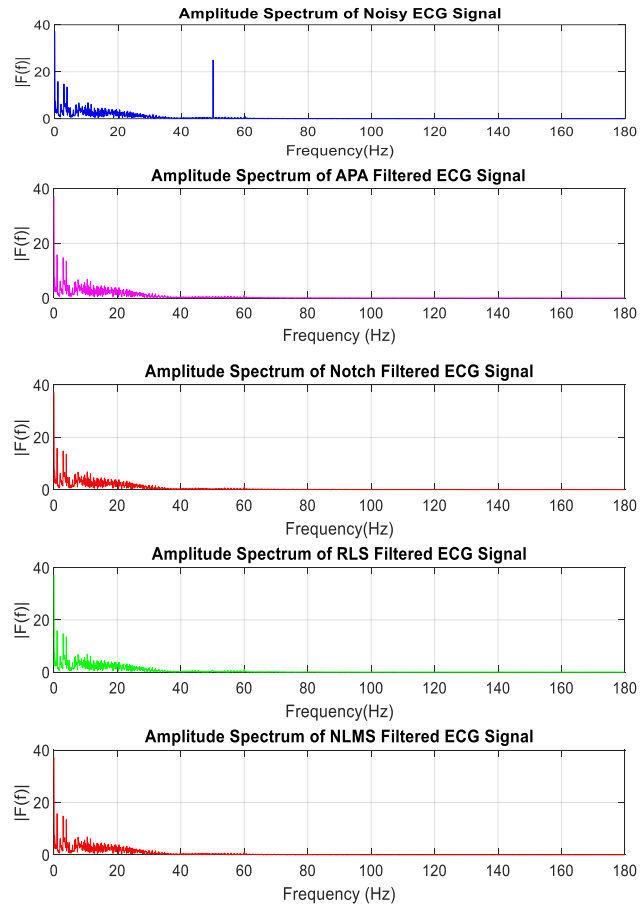

Fig. 3. Frequency domain graphical representation of noisy, notch filtered, adaptive RLS filtered, adaptive NLMS filtered, and APA filtered ECG signals (record #106).

In the time domain analysis, the removal of the 50 Hz interference is visually demonstrated in Figure 2, which shows the results of the notch filter, the adaptive RLS filter, the adaptive NLMS filter, and the APA filter. The results indicate that each filter successfully reduces the interference. The frequency domain analysis, depicted in Figure 3, further validates the effectiveness of these filters.

The frequency spectrum of the noisy ECG signal, notch filter, adaptive RLS filter, adaptive NLMS filter, and APA filter is presented in Figure 3. These figures confirm that the 50 Hz interference is effectively removed by all four filtering methods.

The Power Spectral Density (PSD) of each type of ECG signal is analyzed, as shown in Figure 4, to assess the performance of the applied filtering techniques.

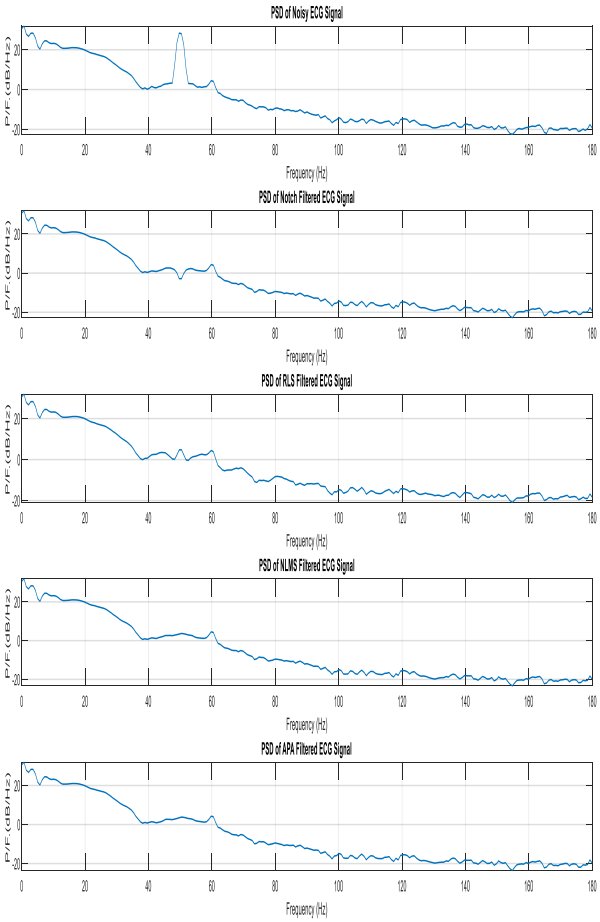

Fig. 4. PSD curves of noisy, notch filtered, adaptive RLS filtered, adaptive NLMS filtered, and APA filtered ECG signals (record #106).

The spectrogram is a vital metric for evaluating filter performance, particularly in applications involving signal processing and noise removal. It provides a visual representation of a signal's frequency content over time, allowing for detailed analysis of how well a filter suppresses unwanted components, such as noise or interference, while preserving the signal of interest. By examining the spectrogram before and after filtering, one can assess the reduction of power line interference or other disturbances across the frequency spectrum. Additionally, the spectrogram helps in identifying any distortions or artifacts introduced by the filter, which may affect signal integrity. This time-frequency analysis is especially valuable in biomedical signal processing, like ECG filtering, where preserving critical signal features while removing interference is crucial for accurate diagnosis and analysis. Thus, the spectrogram serves as an intuitive and powerful tool for evaluating the effectiveness and efficiency of various filters.

The spectrogram was plotted for each kind of ECG signal described in Figures 3 and 4. It shows how the spectral density of a signal varies with time. The spectrogram of noisy ECG signal, notch filtered signal, adaptive RLS filtered signal, adaptive NLMS filtered signal, and APA filtered signal is shown in Figure 5. By observing Figure 5, it can strongly be said that the 50 Hz noise in the ECG signal is properly reduced by the APA filter, performing comparably to the NLMS filter and surpassing the RLS and notch filters.

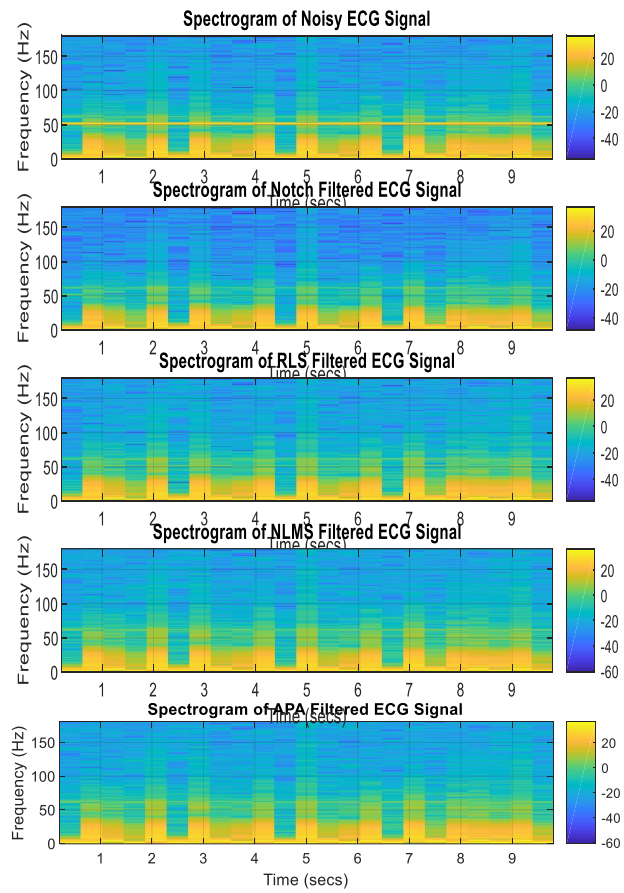

Fig. 5. Spectrogram of noisy, notch filtered, adaptive RLS filtered, adaptive NLMS filtered, and APA filtered ECG signals (record #106).

The values of various performance parameters (SNR, %PRD, and MSE) for the notch-filtered signal, adaptive RLS-filtered signal, adaptive NLMS-filtered signal, and APA-filtered signal are calculated and presented in the table. It is well established that high SNR values and low %PRD and MSE values indicate better filtering performance. From the table, it is evident that all the filtering methods significantly enhance the signal quality, with each approach achieving respectable SNRs and reducing %PRD and MSE compared to what is typically expected in noisy signals. Among the filters, the APA filter and the NLMS filter demonstrate superior performance, achieving high SNR and low %PRD and MSE values. The APA filter achieves slightly better results than the NLMS filter, with an SNR of 38.5, %PRD of 1.15, and MSE of 1.05.

TABLE I
VALUES OF PERFORMANCE PARAMETERS (SNR, %PRD, AND MSE)

Performance Parameter	Notch	Adaptive RLS	Adaptive NLMS	APA
SNR	30.85	30.5	38.3	38.47
%PRD	2.87	2.98	1.22	1.19
MSE	6.03	6.53	1.09	1.04

IV. CONCLUSION

The analyses in both time and frequency domains demonstrate that the APA filter effectively reduces the 50 Hz power line interference. The PSD values obtained with the APA filter surpass those of the adaptive NLMS, RLS, and traditional notch filters, a finding further validated by spectrogram analyses. Additionally, the APA filter confirms its superiority with a higher SNR, lower %PRD, and reduced MSE compared to the other methods. These results conclude that the APA filter is the most effective technique for mitigating 50 Hz power line interference from ECG signals, surpassing the adaptive NLMS, RLS, and traditional notch filtering approaches.

REFERENCES

[1] E. T. Gar, C. Thomas and M. Friesen, "Comparison of Noise Sensitivity of QRS Detection Algorithms," IEEE Tran. Biomed. Eng., vol. 37, no.1, pp. 85-98, January 1990.

[2] R. Panda, "Removal of Artifacts from Electrocardiogram using Digital Filter," Electrical, Electronics and Computer Science (SCEECS), IEEE Students' Conference, pp. 1-4, March 1-2, 2012.

[3] M. S. Chavan, R. Agarwala, M. D. Uplane, and M. S. Gaikwad, "Design of ECG Instrumentation and Implementation of Digital Filter for Noise Reduction," World Scientific and Engineering Academy and Society (WSEAS), Stevens Point, Wisconsin, USA, vol. 1, no. 157-474, pp. 47- 50, January 2004.

[4] R. Limacher, "Removal of Power Line Interference from the ECG Signal by an Adaptive Digital Filter," in Proc. of European Tel. Conf., Garmisch-Part, pp. 300-309, May 21-23, 1996.

[5] C. Chandrakar and M.K. Kowar,"Denoising ECG Signals Using Adaptive Filter Algorithm," Int. J. of Soft Computing and Eng. (IJSCE), vol. 2, no. 1, pp. 120-123, March 2012.

[6] D. V. R. K. Reddy, M. Z. U. Rahman, Y. Sangeetha, and N. S. Sudha, "Base Line Wander and Power Line Interference Elimination from Cardiac Signals Using a Novel LMS Algorithm Based on Differential Inputs and Errors," Int. J. of Advanced Eng. & Appl., pp. 187-191, January 2011.

[7] A. B. Sankar, D. Kumar and K. Seethalakshmi, "Performance Study of Various Adaptive Filter Algorithms for Noise Cancellation in Respiratory Signals," Signal Processing: An Int. J. (SPIJ), vol. 4, no. 5, pp. 267-278, 2010.

[8] M. Maniruzzaman, K. M. S. Billah, U. Biswas, and B. Gain, "Least-mean-square Algorithm Based Adaptive Filters for Removing Power Line Interference from ECG Signal," in Proc.ICIEV'12, paper 410, p. 737-740, May 18-19, 2012.

[9] M. Kaur and B. Singh, "Power Line Interference Reduction in ECG Using Combination of MA Method and IIR Notch Filter," Int. J. of Recent Trends in Eng., vol. 2, no. 6, pp. 125-129, November 2009.

[10] www.physionet.org.

[11] Y. Kumar and G. K. Malik, " Performance Analysis of Different Filters for Power Line Interface Reduction in ECG Signal," Int. J. of Computer Appl. , vol. 3, no.7, pp. 1-6, June, 2010.