ST SMART

MAKE EVERYTHING SMART

# SMART TECHNOLOGT

# LECTURE 4

# • Line Tracker Sensor (TCRT5000)

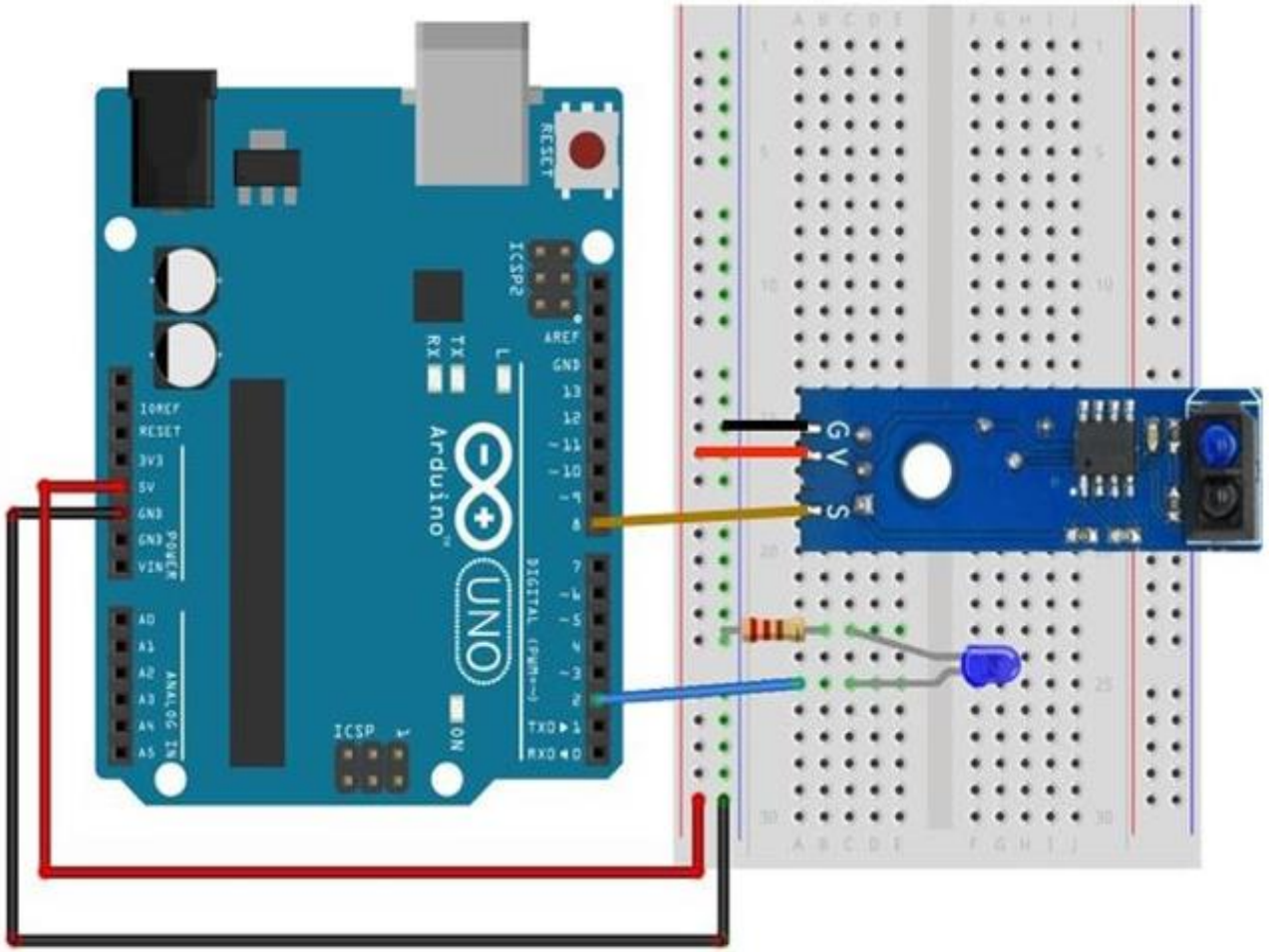


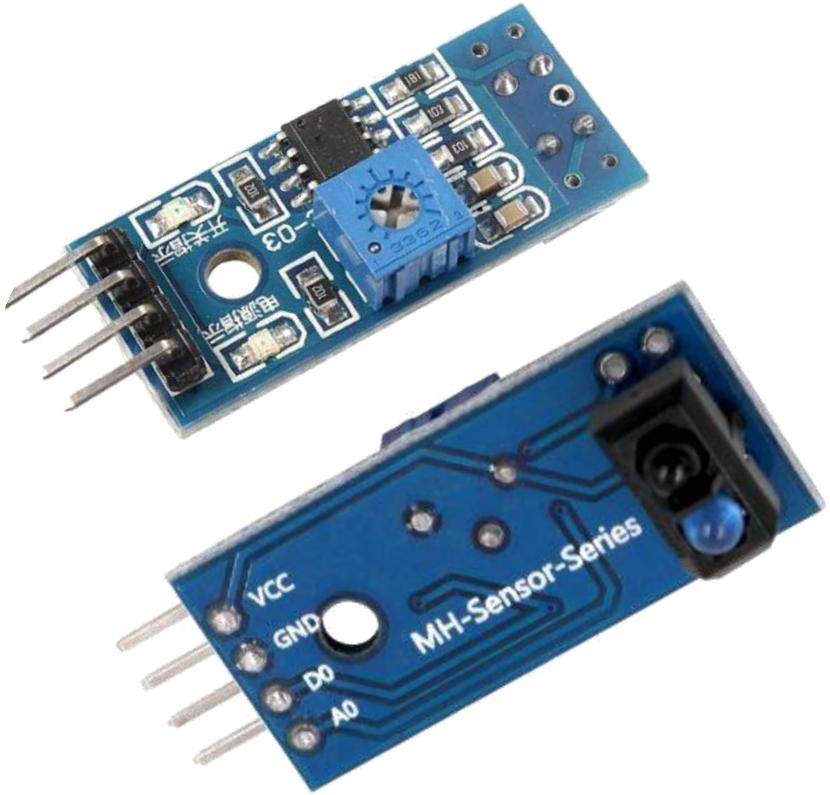

# • Basic Principle

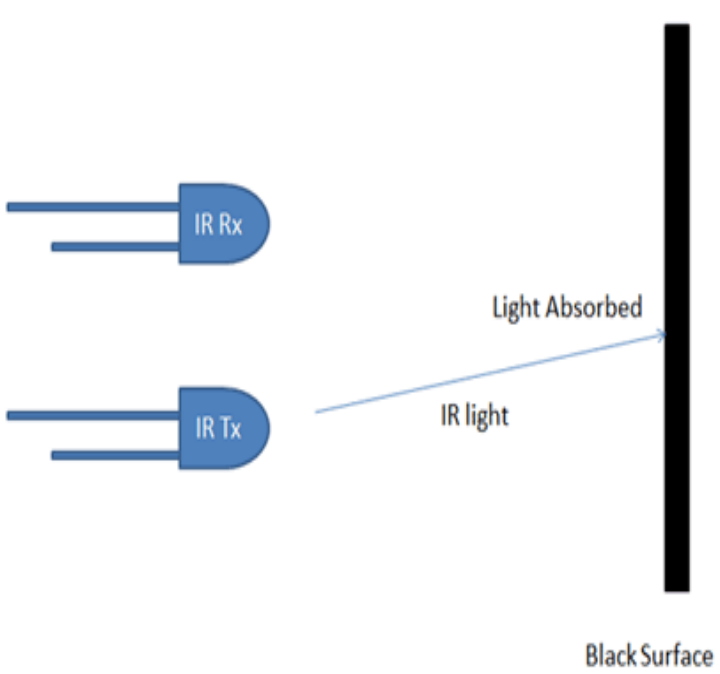


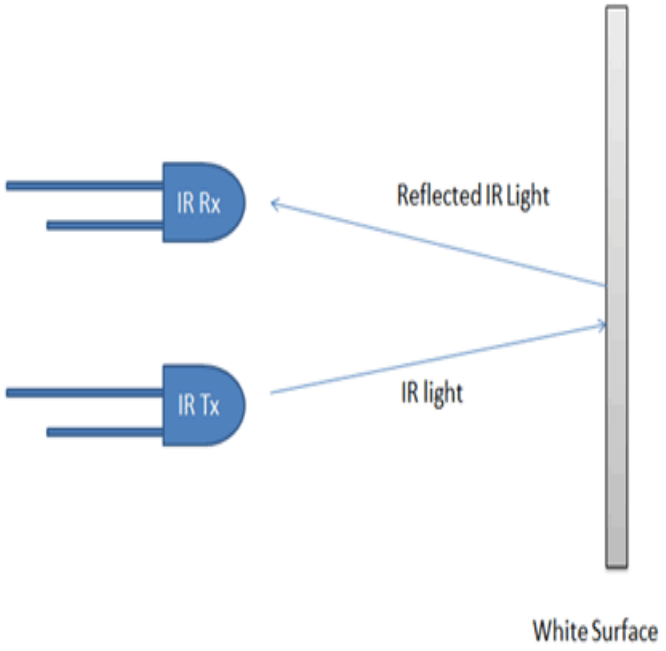


reflection distance: 1mm to 25mm

Reading
1

Reading
0

# • Code

```
int lineTracker = 8;
int led = 2;
int state = 0;
void setup()
{
 pinMode(lineTracker,INPUT);
 pinMode(led,OUTPUT);
}
void loop()
{
  state=digitalRead(lineTracker);
  digitalWrite(led,state);
}
```

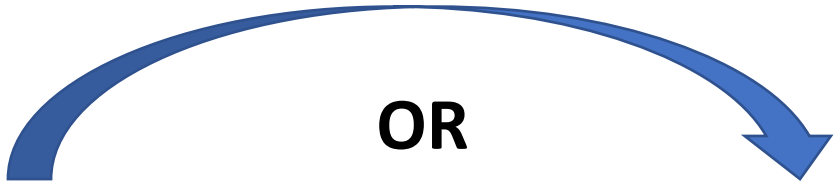


```
void setup()
{
 pinMode(8,INPUT);
 pinMode(2,OUTPUT);
}
void loop()
{
  digitalWrite(led,digitalRead(8));
}
```

# • Code

```
int lineTracker = 3;
int x = 0;
int y = 0;

void setup()
{
 Serial.begin(9600);
 pinMode(lineTracker,INPUT);
}
void loop()
{
  x=digitalRead(lineTracker);
  Serial.print(x);
  y=analogRead(A0);
  Serial.print(" ");
  Serial.println(y);
}
```

# • DC Motor

**DC Motor** is any of a class of rotary electrical motors that converts direct current electrical energy into mechanical energy

# • DC Motor Specification

| | |
|---|---|
| **Operating Voltage** | 3V-12VDC |
| **Maximum Torque** | 800g/cm max |
| **Gear Ratio** | 1:48 |
| **Load Current** | 70mA (250mA max. @ 3V) |
| **Weight** | 29g |

# • DC Motor

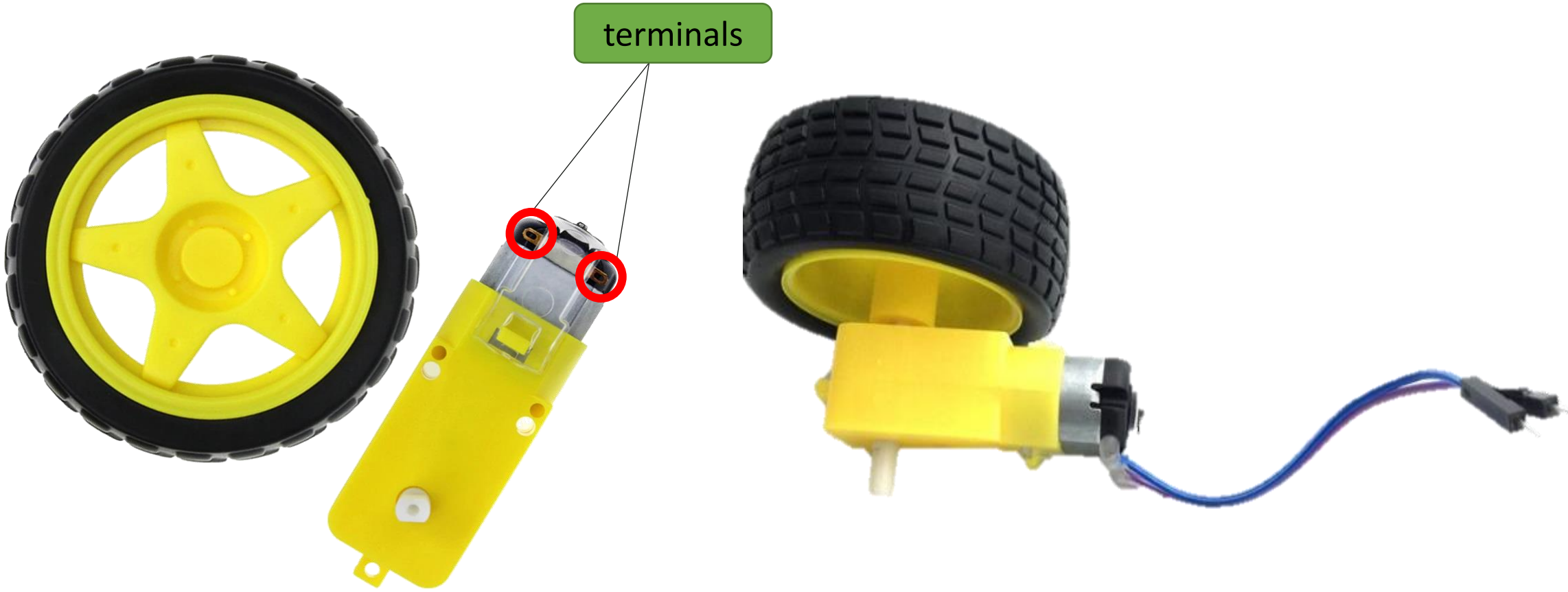

# • Basic Principle

blue → positive

Purple → negative

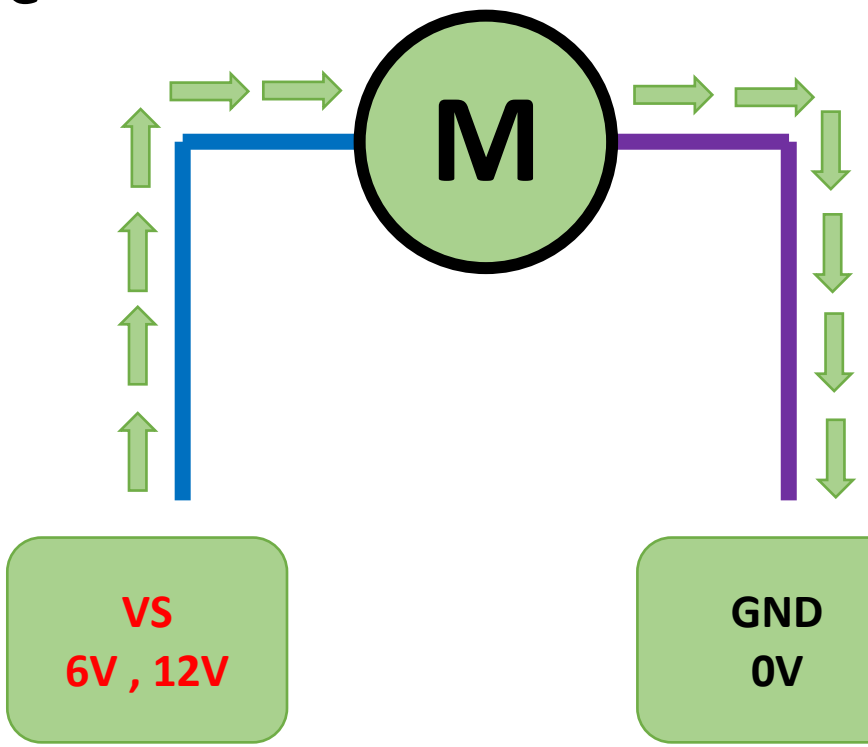


forword

# • Basic Principle

blue → positive
Purple → negative

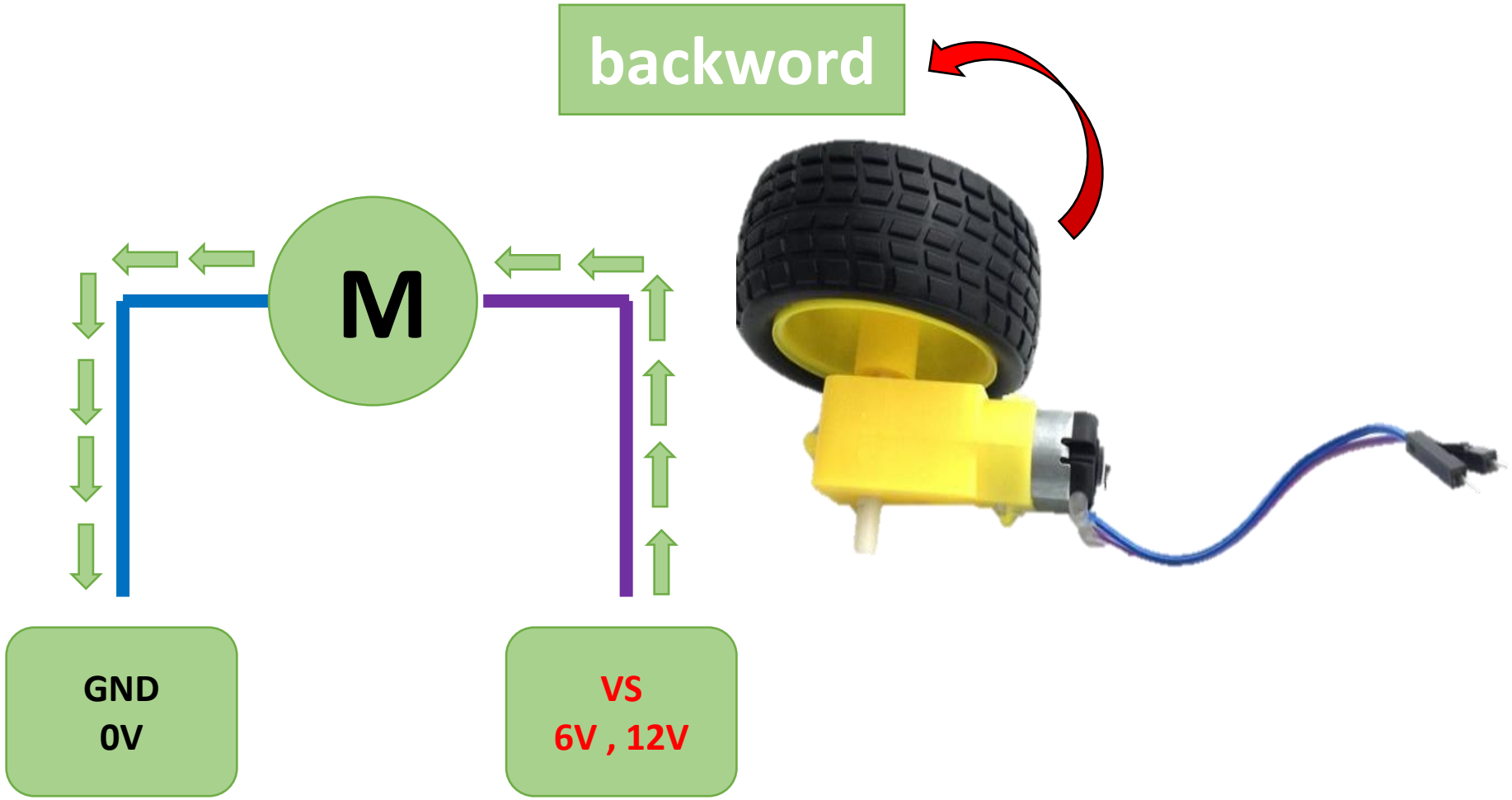

# • Mobile Robot

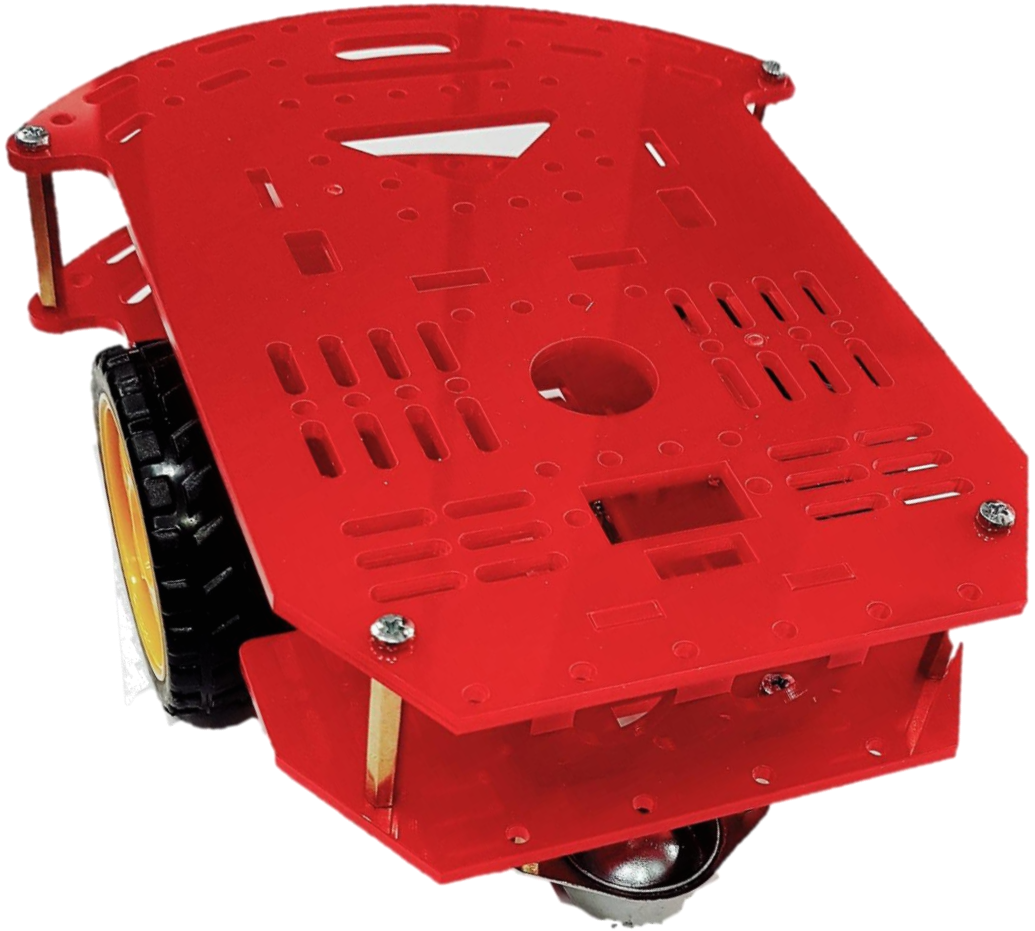

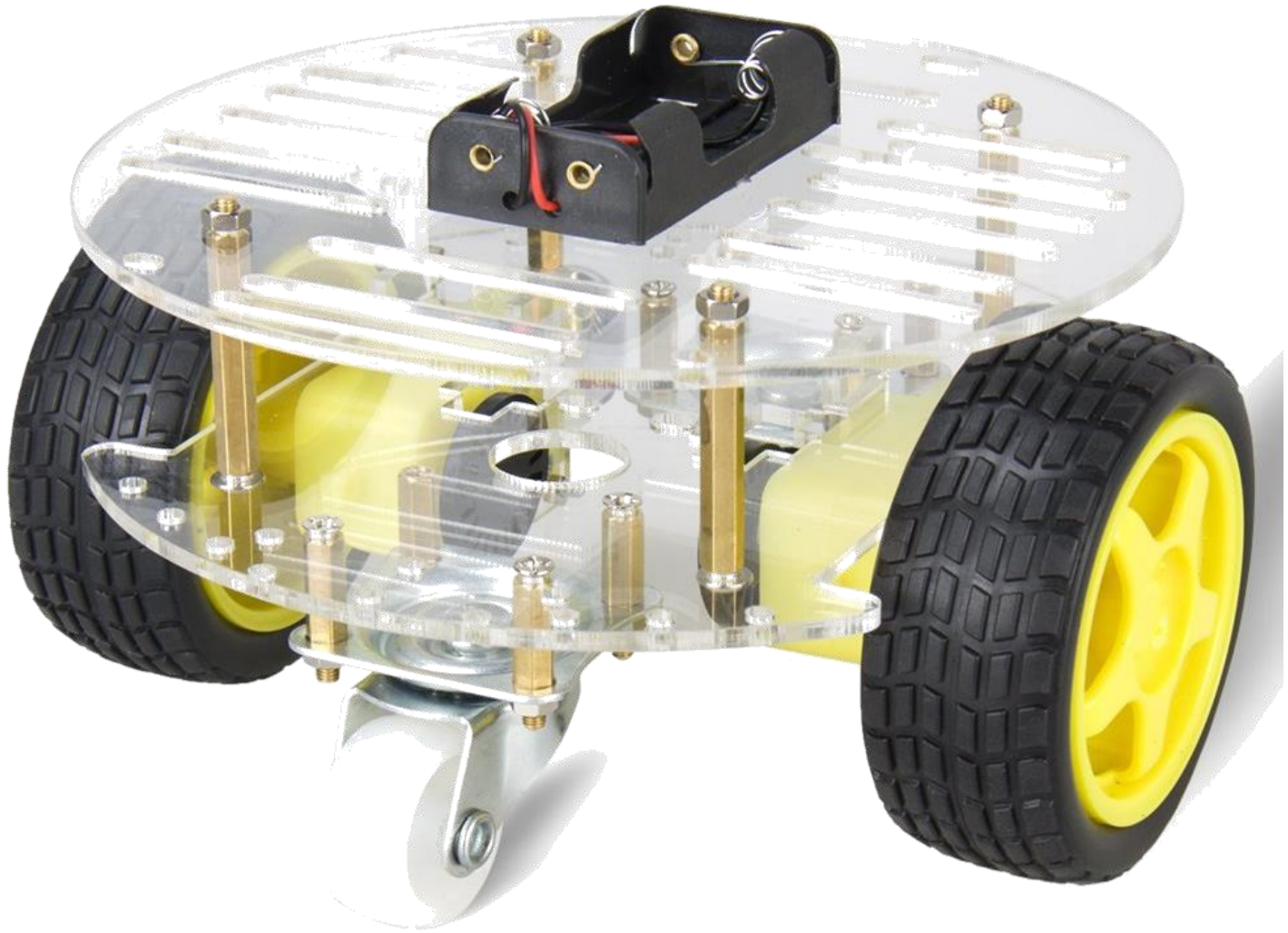

# • Differential steering

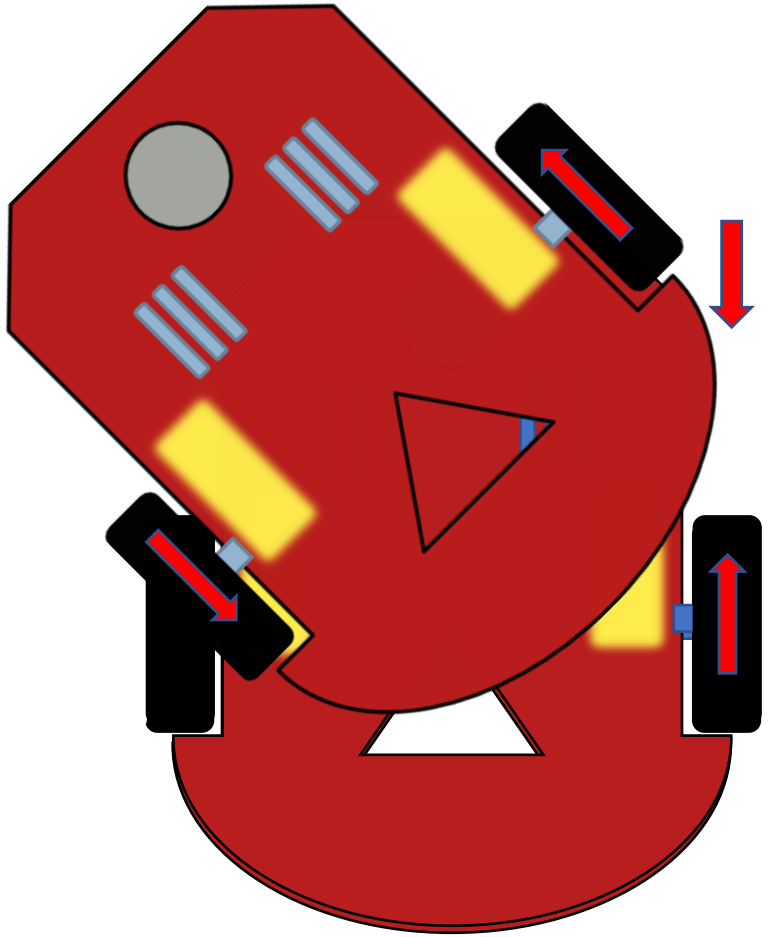

Left

# • Motor Driver

- What is motor driver and Why do we need it ?

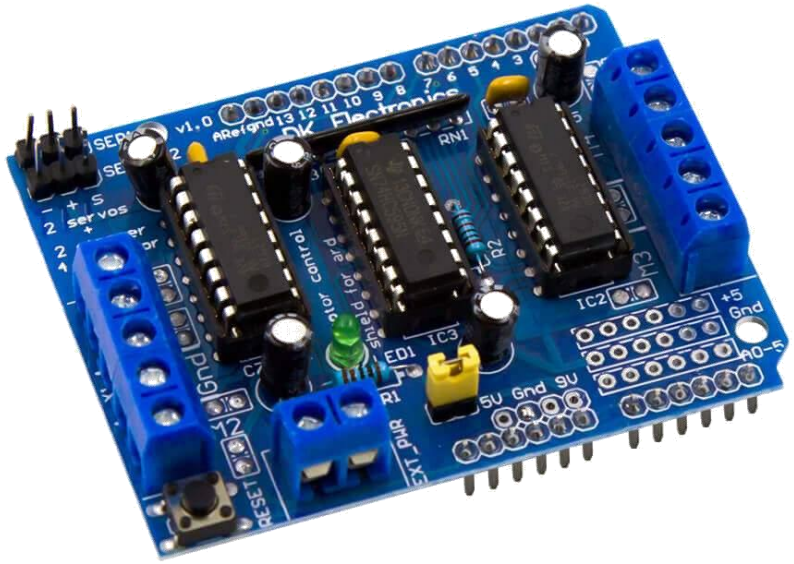


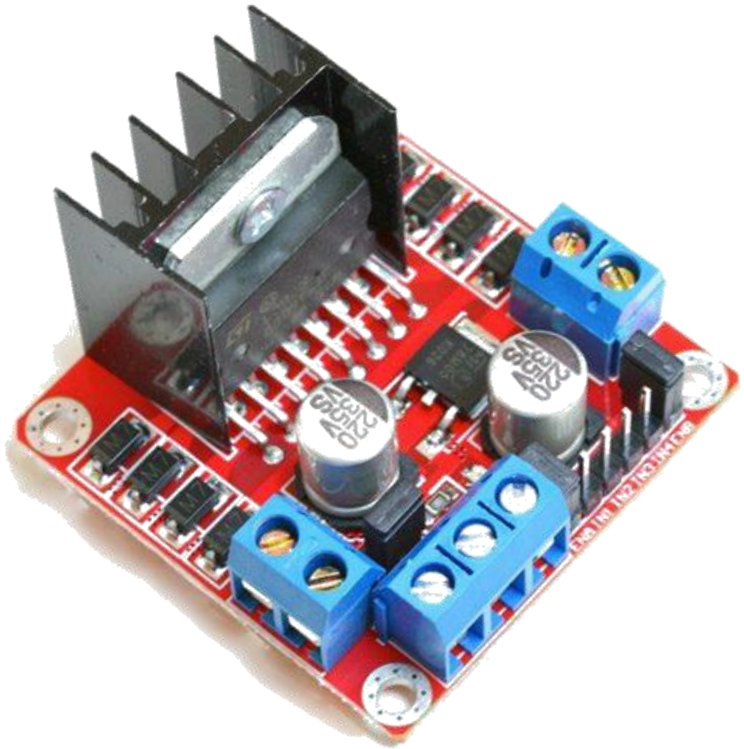

# • Motor Driver (l298N)

- **Motor driver** receives signals from the microprocessor and eventually, it transmits the converted signal to the motors.

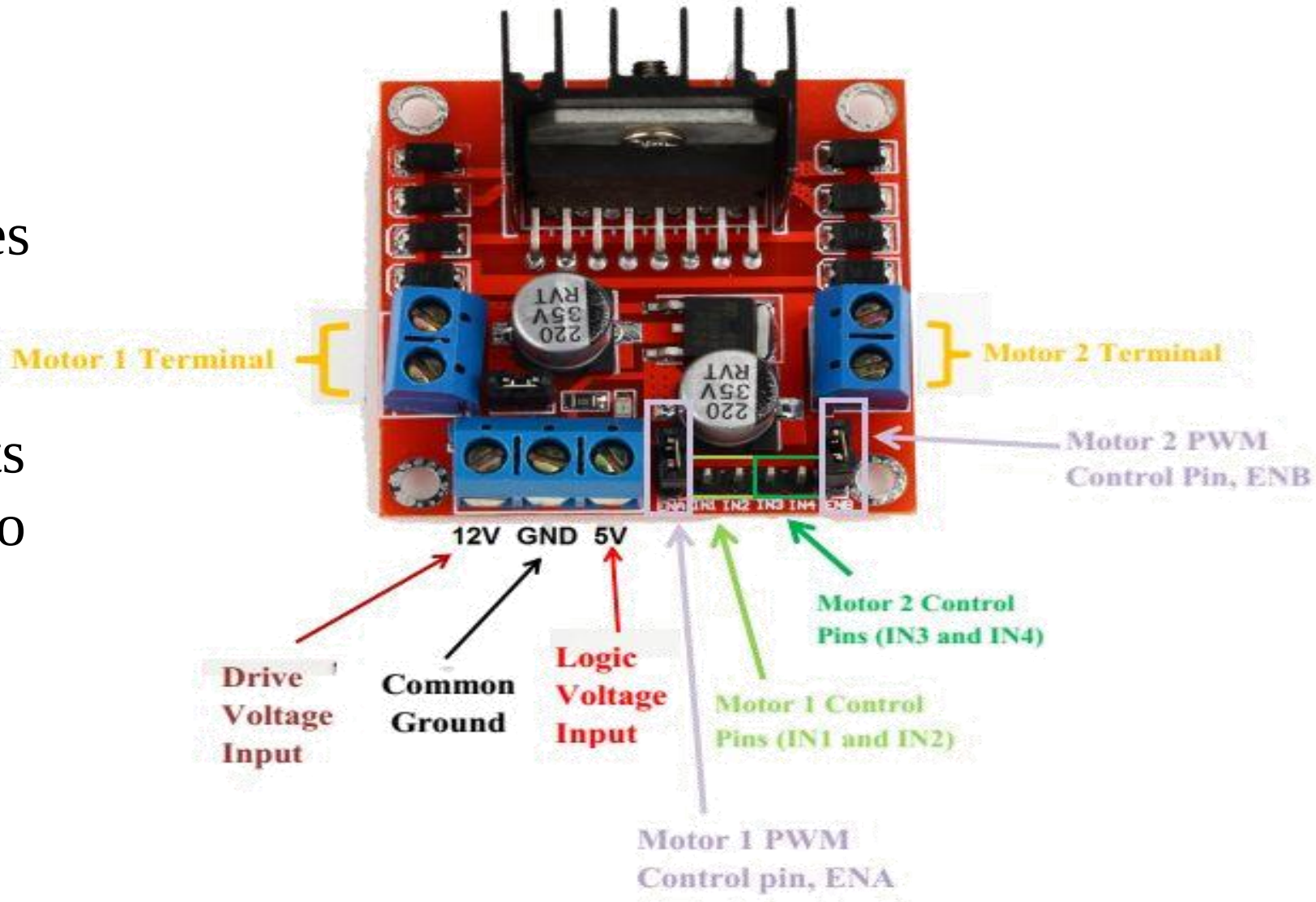

# • Direction Control

**we will agree**:

car is forword when

blue cable → HIGH signal

purpule cable→LOW signal

**left motor**

blue cable →out1

purpule cable→out2

**right motor**

blue cable→out3

purpule cable→out4

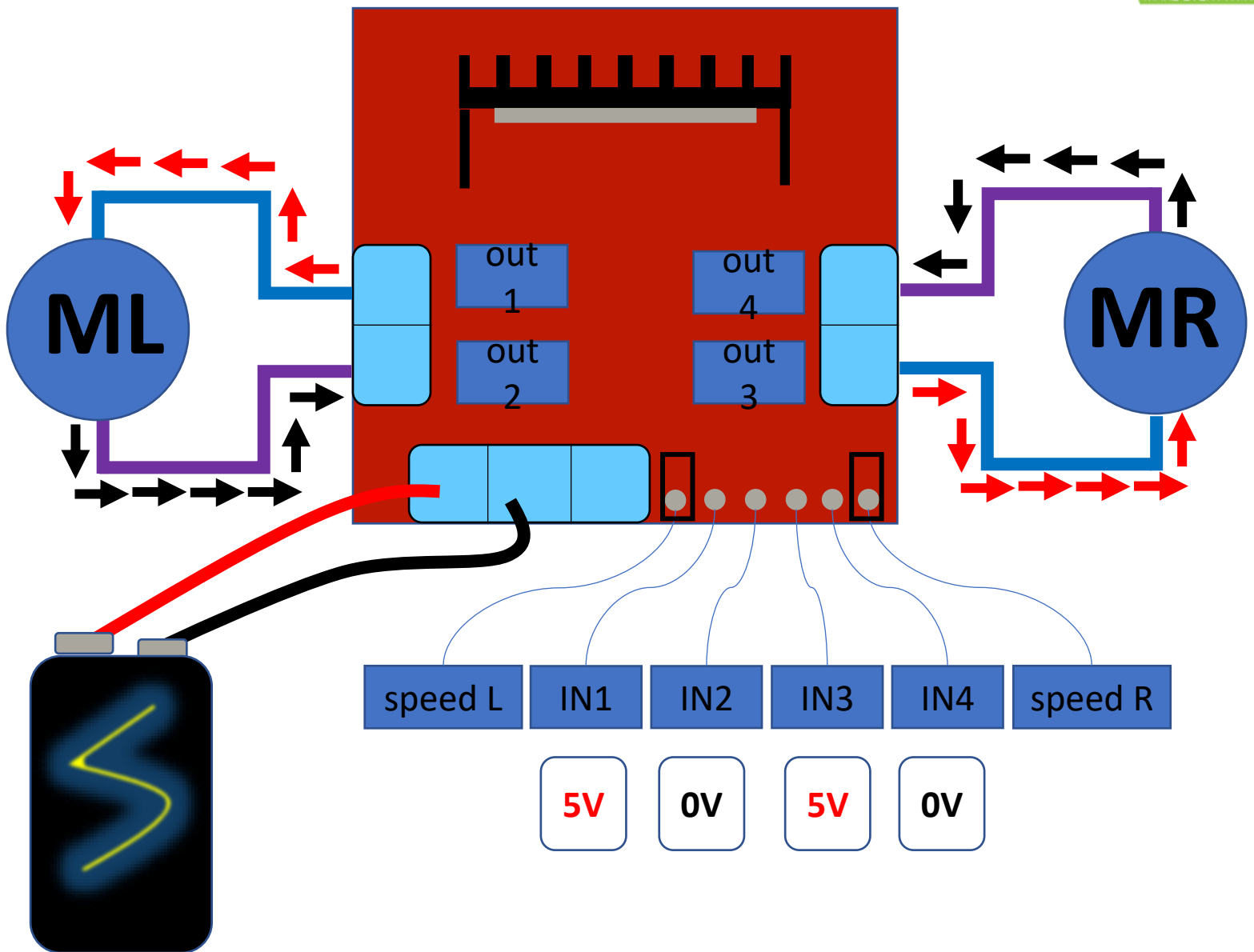

# • Direction Control

**we will agree**:

car is forword when

blue cable → HIGH signal
purpule cable→LOW signal

**left motor**

blue cable →out1
purpule cable→out2

**right motor**

blue cable→out3
purpule cable→out4

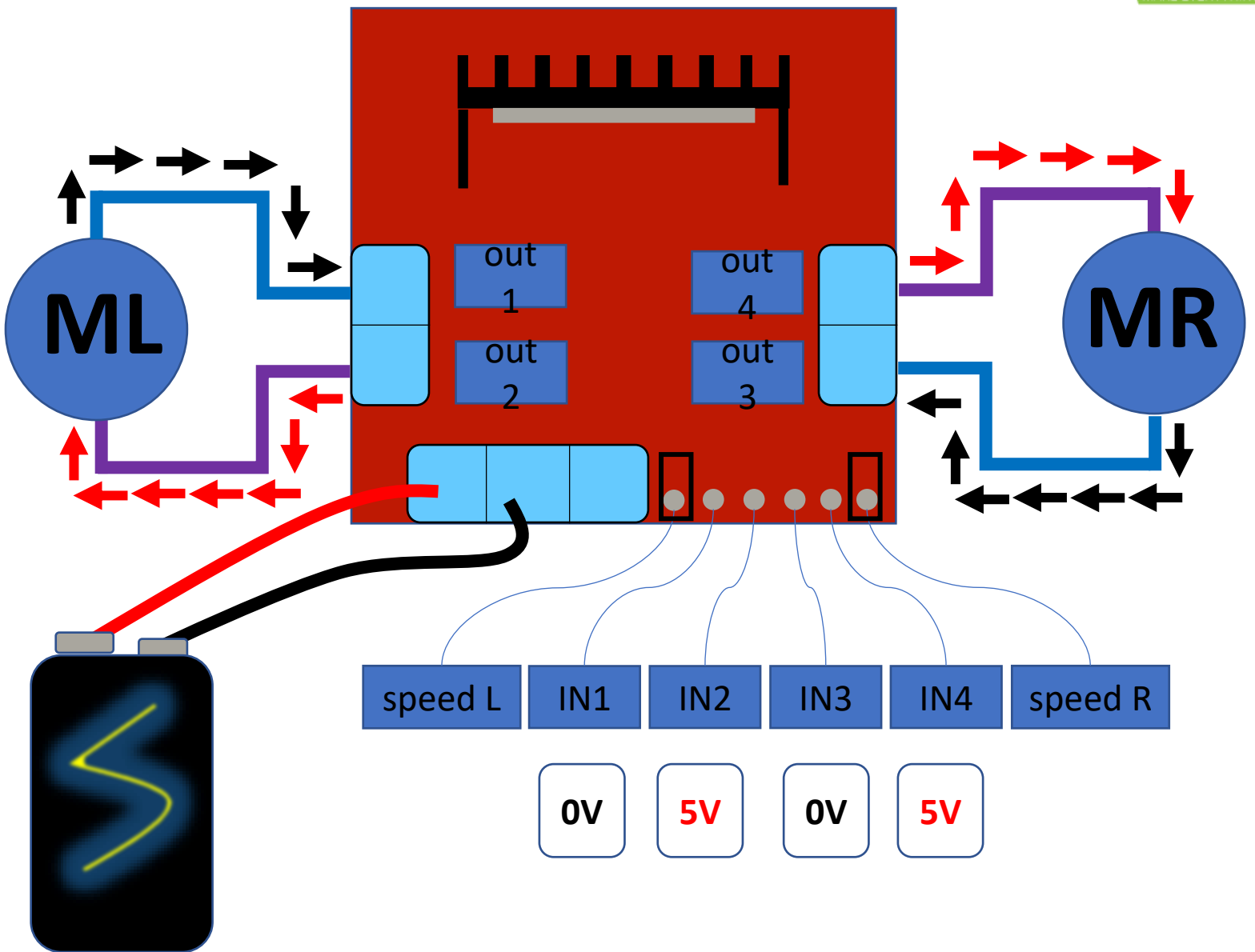

# • Car Direction Test

```
#define speedL 10
#define IN1 9
#define IN2 8
#define IN3 7
#define IN4 6
#define speedR 5
void setup()
{
  Serial.begin (9600);
  for(int i=5 ; i<=10 ; i++)
  {
    pinMode(i, OUTPUT);
  }
}
```

```
void forword()
{
digitalWrite(IN1, HIGH);
digitalWrite(IN2, LOW);
digitalWrite(IN3, HIGH);
digitalWrite(IN4, LOW);
analogWrite(speedL,150);
analogWrite(speedR,150);
}
void backword()
{
digitalWrite(IN1, LOW);
digitalWrite(IN2, HIGH);
digitalWrite(IN3, LOW);
digitalWrite(IN4, HIGH);
analogWrite(speedL,150);
analogWrite(speedR,150);
}
```

```
void left()
{
digitalWrite(IN1, LOW);
digitalWrite(IN2, LOW);
digitalWrite(IN3, HIGH);
digitalWrite(IN4, LOW);
analogWrite(speedL,0);
analogWrite(speedR,150);
}
void right()
{
digitalWrite(IN1, HIGH);
digitalWrite(IN2, LOW);
digitalWrite(IN3, LOW);
digitalWrite(IN4, LOW);
analogWrite(speedL,150);
analogWrite(speedR,0);
}
```

```
void stopp() {
digitalWrite(IN1, LOW);
digitalWrite(IN2, LOW);
digitalWrite(IN3, LOW);
digitalWrite(IN4, LOW);
analogWrite(speedL,0);
analogWrite(speedR,0);  }
void loop() {

    forword();    delay(2000);
    backword();   delay(2000);
    right();      delay(2000);
    left();       delay(2000);
    stopp();      delay(2000);

}
```

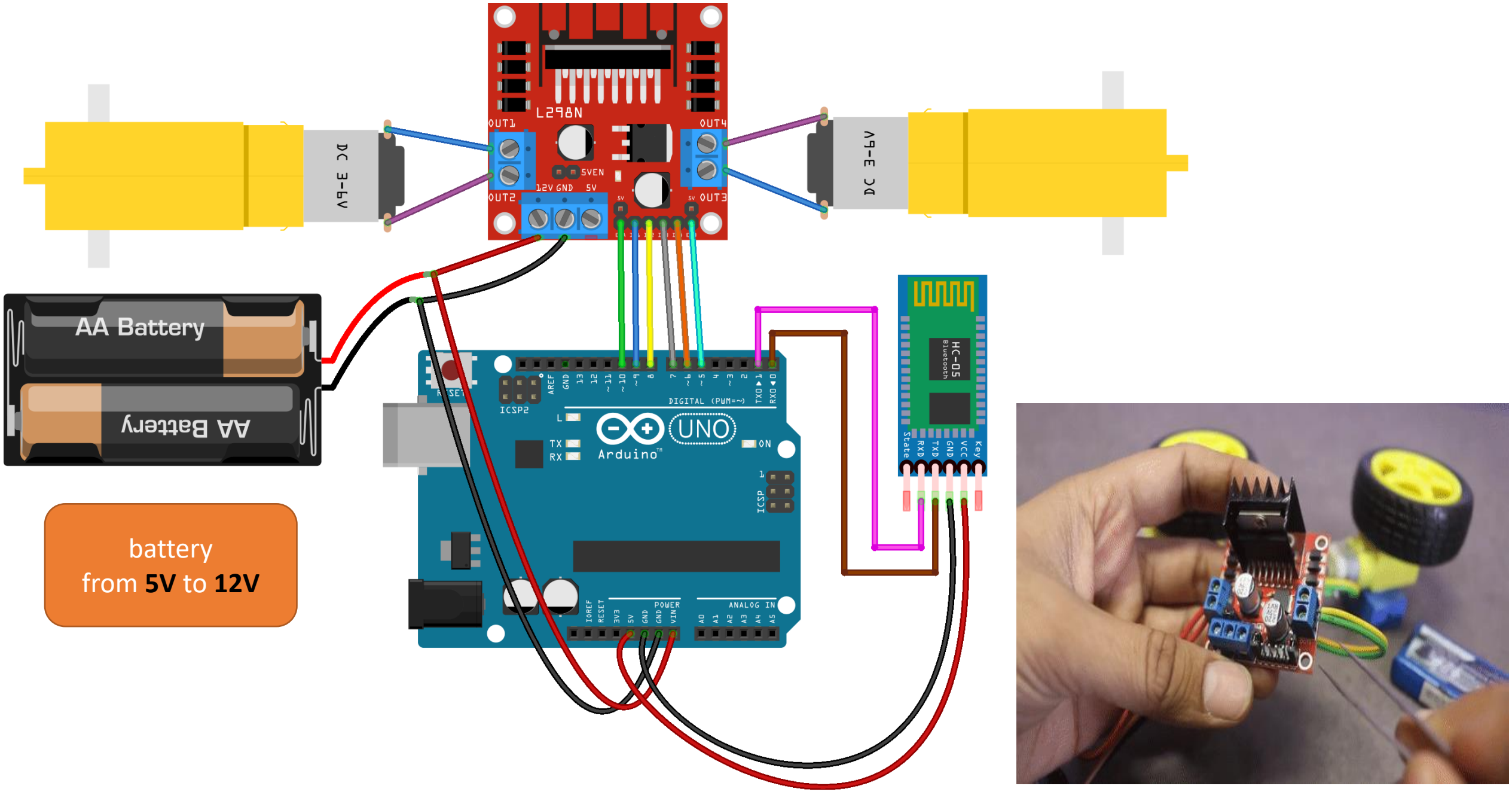
L298N
OUT1
OUT2
OUT3
OUT4
5VEN
12V GND 5V
DC 3-6V
DC 3-6V
AA Battery
AA Battery
HC-05
Bluetooth
State
RXD
TXD
GND
VCC
Key
UNO
Arduino
ICSP2
ICSP
DIGITAL (PWM=~)
POWER
ANALOG IN
battery
from 5V to 12V

# • Controlled robot by Bluetooth

```
#define speedL 10
#define IN1 9
#define IN2 8
#define IN3 7
#define IN4 6
#define speedR 5
char Reading;
void setup()
{
 Serial.begin (9600);
 for(int i=5 ; i<=10 ; i++)
 {
  pinMode(i, OUTPUT);
 }
}
```

```
void forword()
{
digitalWrite(IN1, HIGH);
digitalWrite(IN2, LOW);
digitalWrite(IN3, HIGH);
digitalWrite(IN4, LOW);
analogWrite(speedL,150);
analogWrite(speedR,150);
}
void backword()
{
digitalWrite(IN1, LOW);
digitalWrite(IN2, HIGH);
digitalWrite(IN3, LOW);
digitalWrite(IN4, HIGH);
analogWrite(speedL,150);
analogWrite(speedR,150);
}
```

```
void left()
{
digitalWrite(IN1, LOW);
digitalWrite(IN2, LOW);
digitalWrite(IN3, HIGH);
digitalWrite(IN4, LOW);
analogWrite(speedL,0);
analogWrite(speedR,150);
}
void right()
{
digitalWrite(IN1, HIGH);
digitalWrite(IN2, LOW);
digitalWrite(IN3, LOW);
digitalWrite(IN4, LOW);
analogWrite(speedL,150);
analogWrite(speedR,0);
}
```

```
void stopp() {
digitalWrite(IN1, LOW);
digitalWrite(IN2, LOW);
digitalWrite(IN3, LOW);
digitalWrite(IN4, LOW);
analogWrite(speedL,0);
analogWrite(speedR,0);  }
void loop() {
 if(Serial.available()>0){
  Reading=Serial.read();
   switch(Reading){
     case 'F': forword(); break;
     case 'B': backword(); break;
     case 'R': right(); break;
     case 'L' : left(); break;
     case 'S' :stopp(); break;
   }
  }
}
```

# • Bluetooth RC App.

not connect with any bluetooth

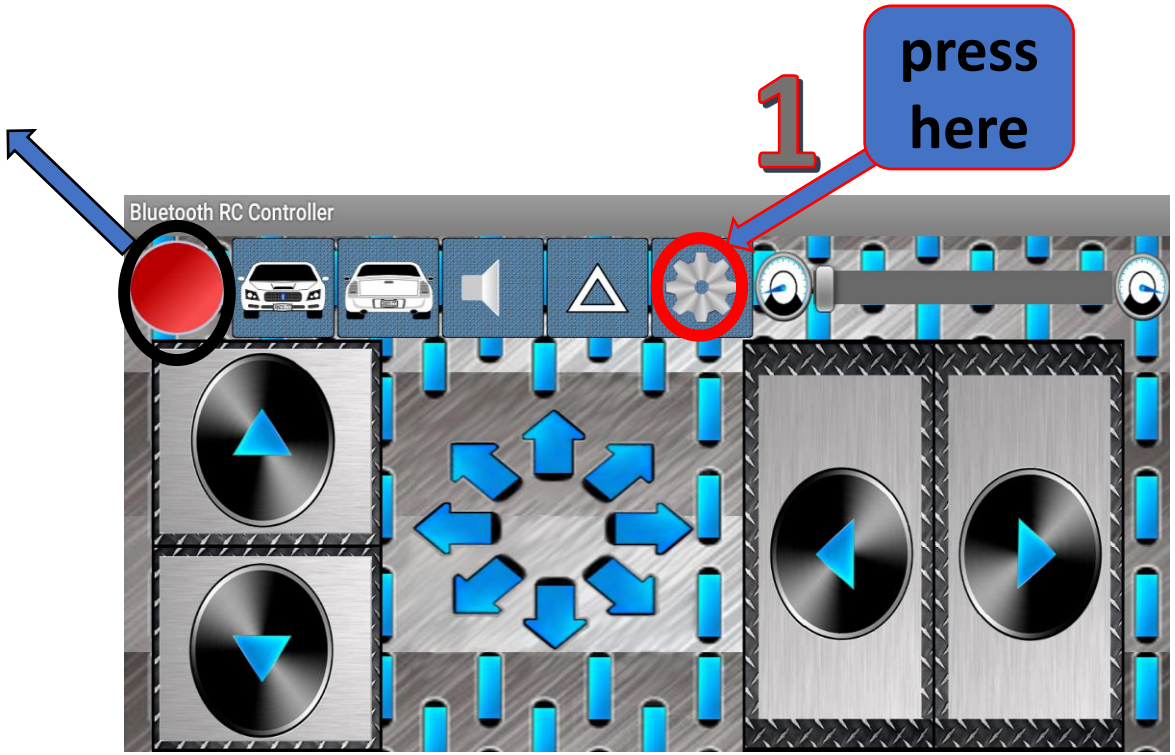


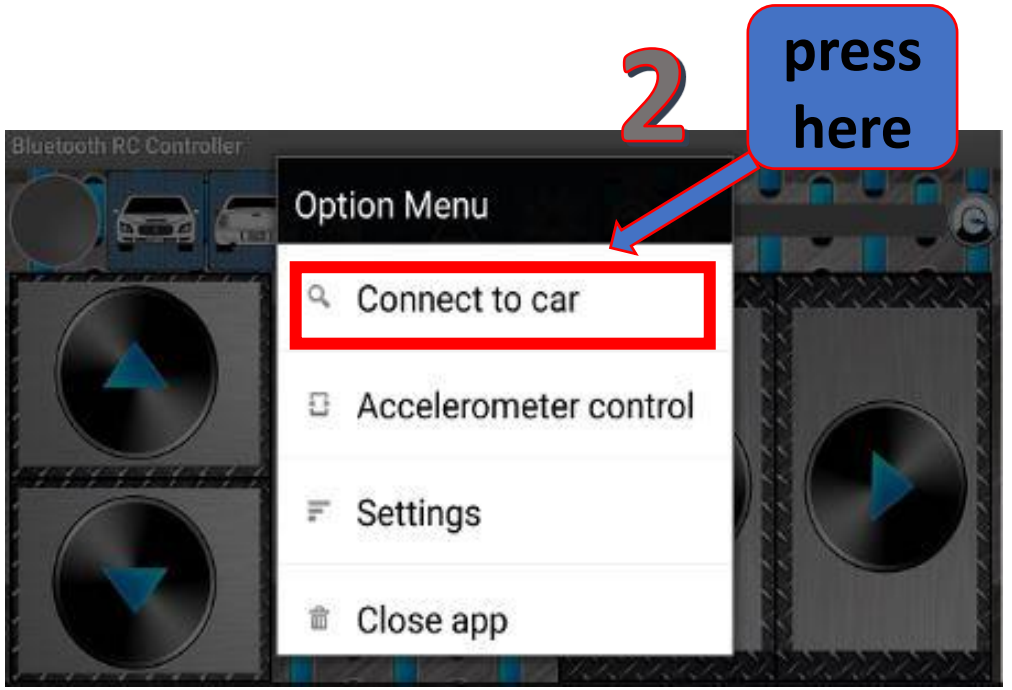

# • Bluetooth RC App.

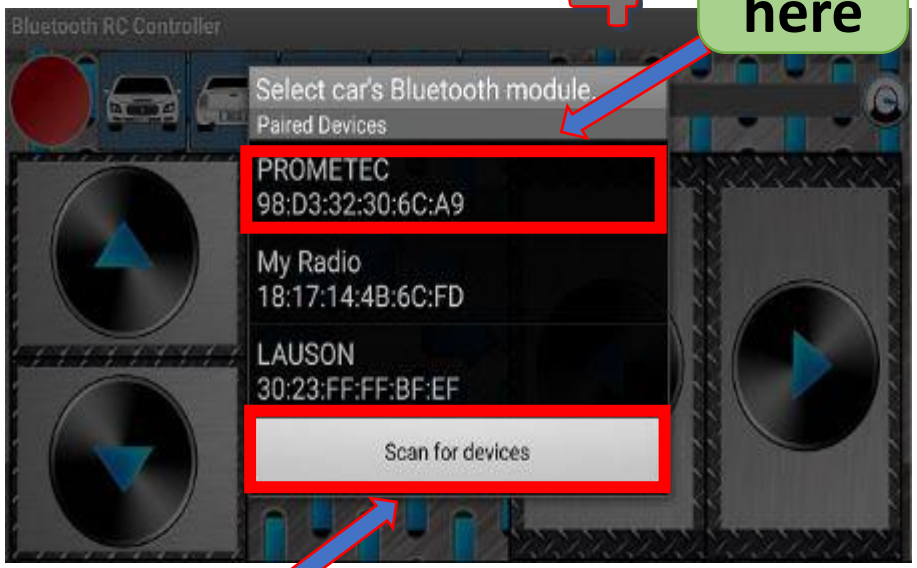


4

press here

3

press here

Bluetooth is connected

5

password
0000 -1234

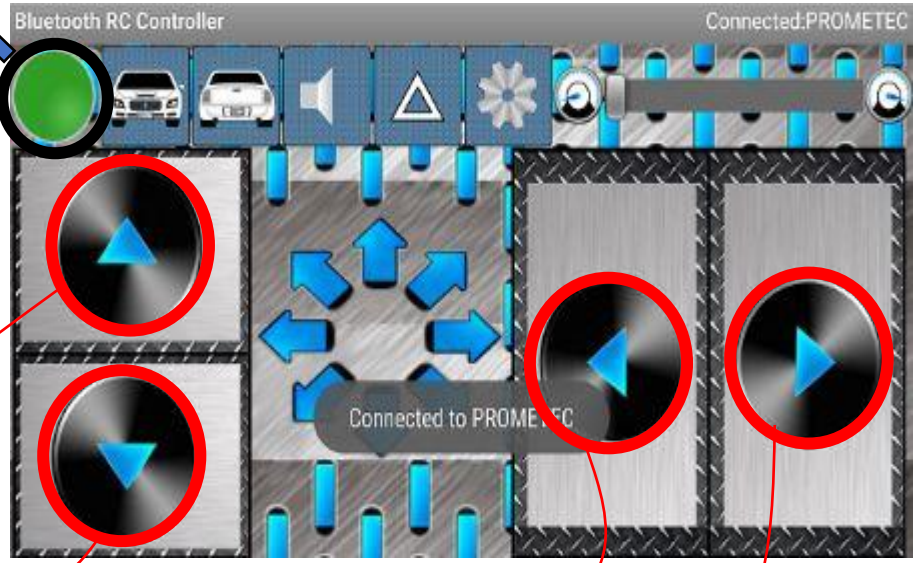


control with these buttons

# • Bluetooth RC App.

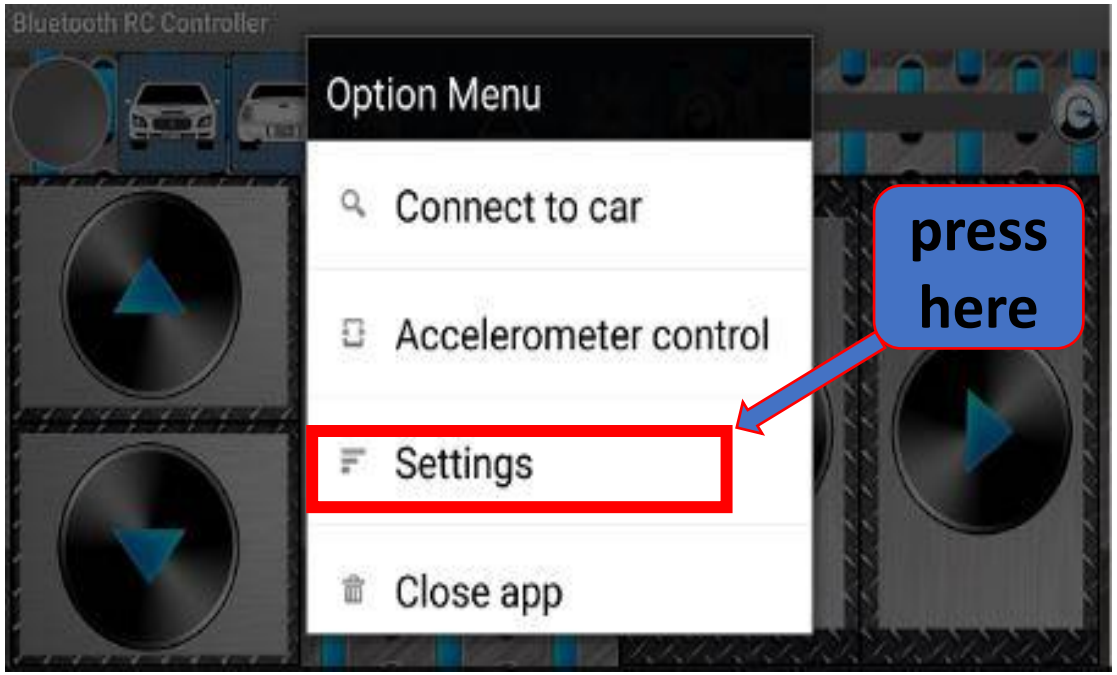


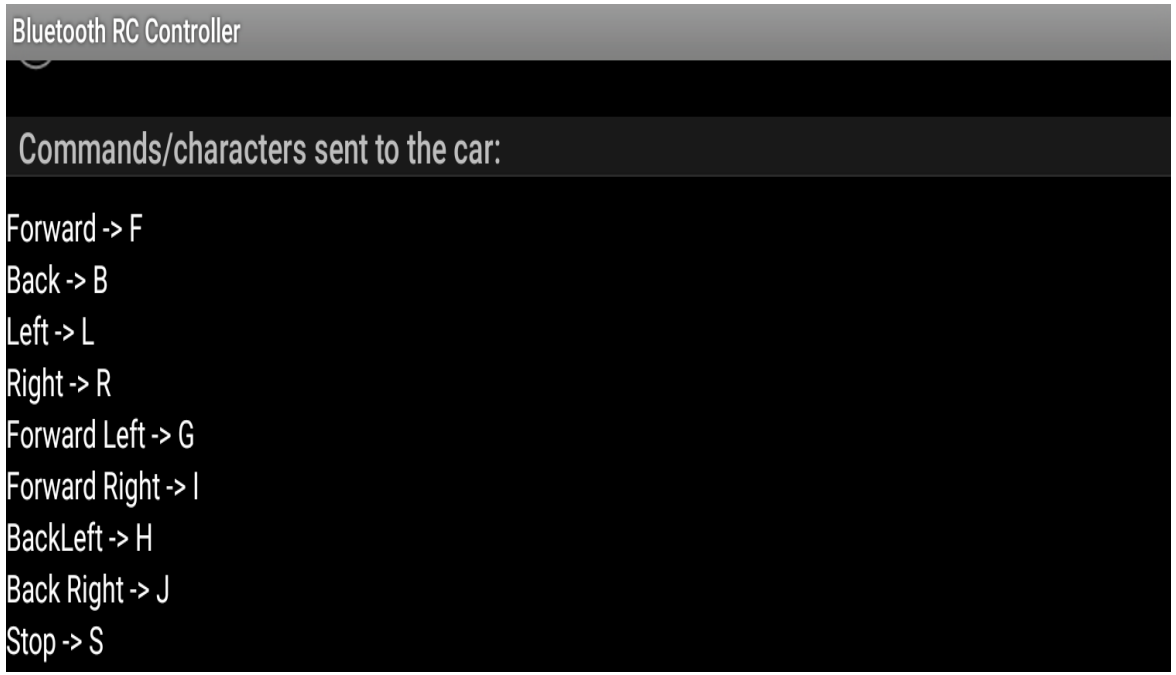

# • Line Follower Robot

| SL | SR | Direction |
|---|---|---|
| | | Forword |
| | | Right |
| | | Left |
| | | Stop |

$$2^{N} = 2^{2} = 4$$

N : number of sensor

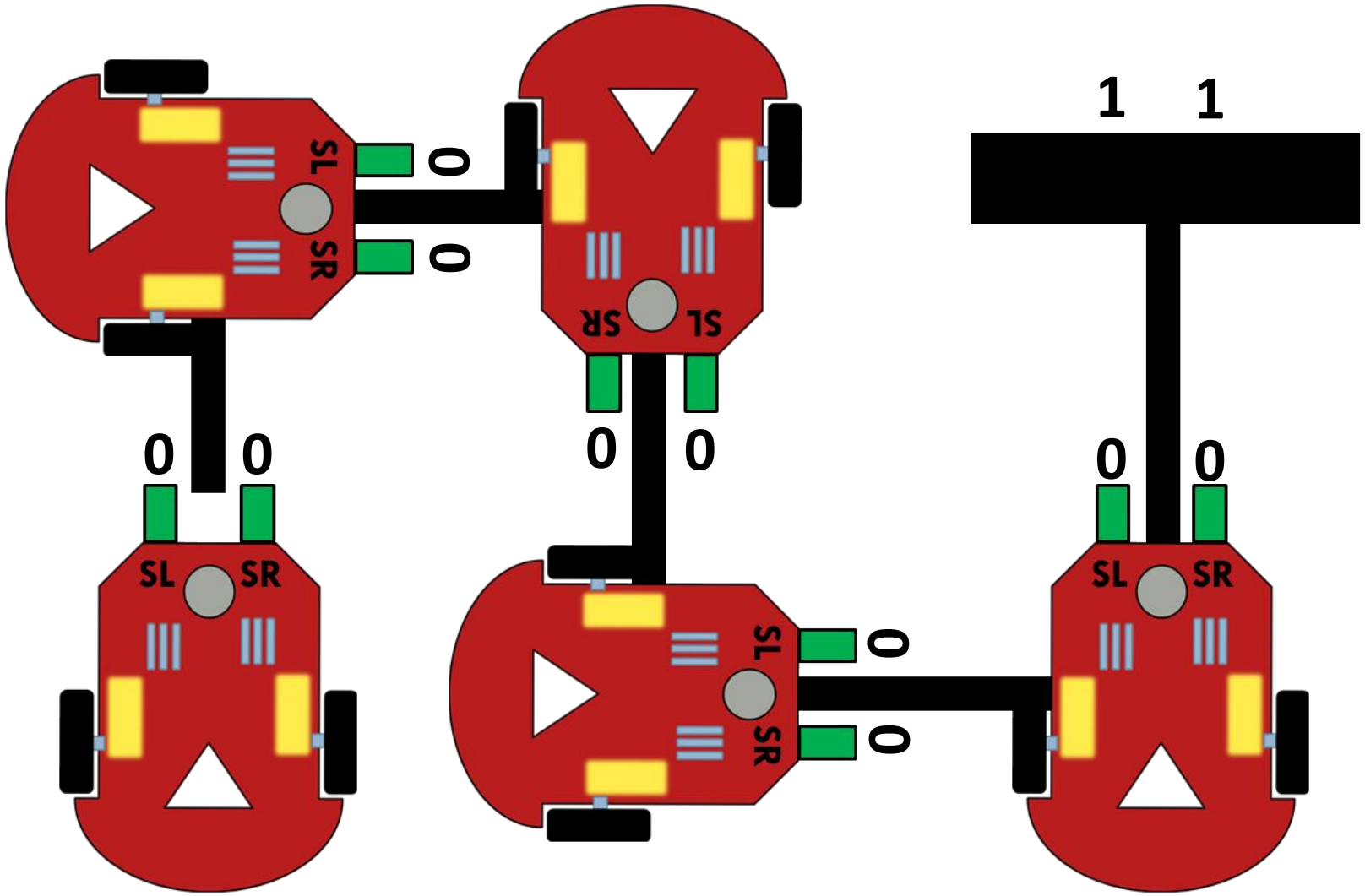

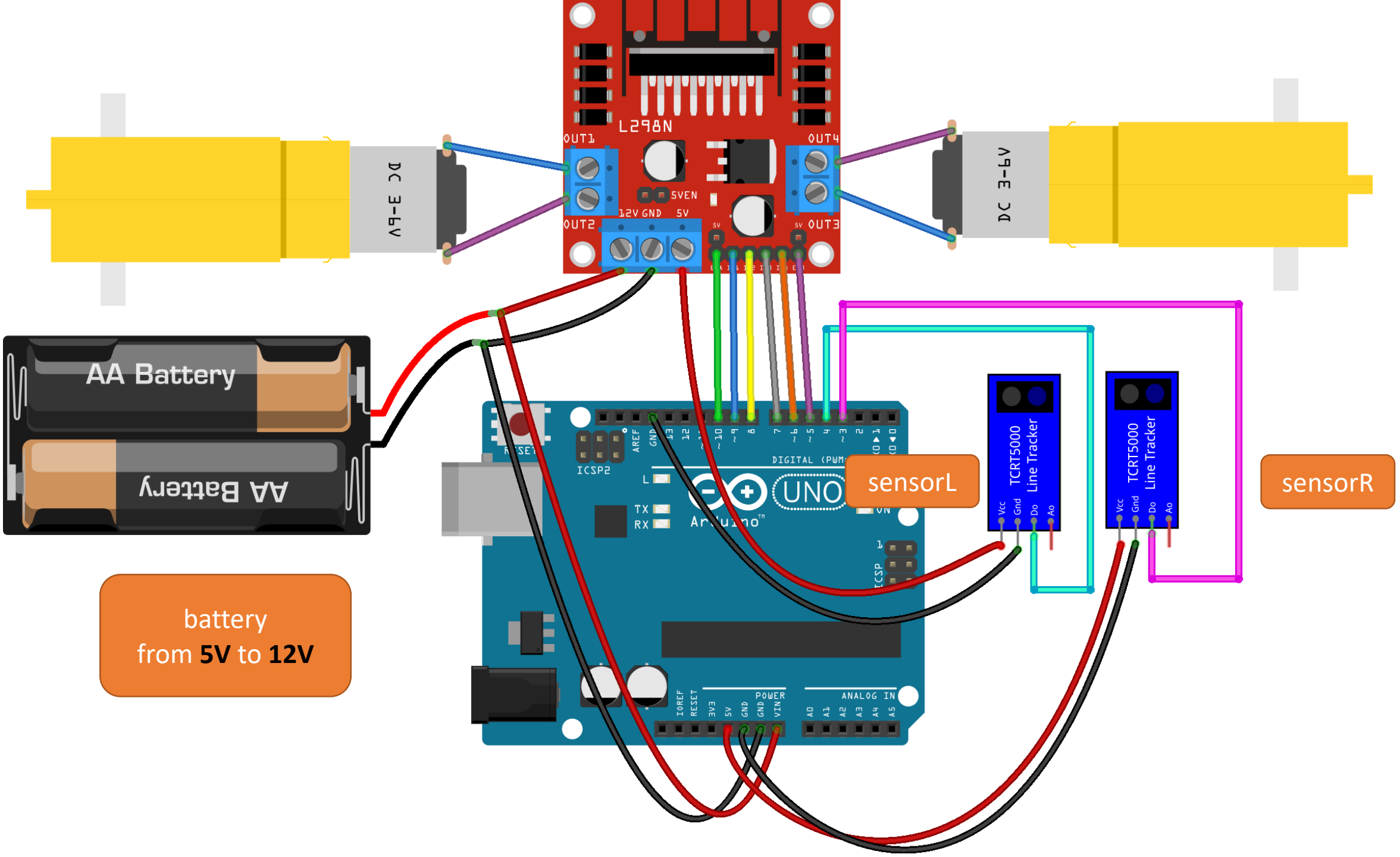

L298N
OUT1
OUT2
OUT3
OUT4
5VEN
12V GND 5V
DC 3-6V
DC 3-6V
AA Battery
AA Battery
battery
from 5V to 12V
ICSP2
DIGITAL (PWM
UNO
Arduino
TX
RX
POWER
ANALOG IN
TCRT5000
Line Tracker
Vcc
Gnd
Do
Ao
TCRT5000
Line Tracker
Vcc
Gnd
Do
Ao
sensorL
sensorR

# • Line Follower Code

```
#define speedL 10
#define IN1 9
#define IN2 8
#define IN3 7
#define IN4 6
#define speedR 5
#define sensorL 4
#define sensorR 3
int sl=0;
int sr=0;
void setup() {
for(int i=5;i<=10;i++)
 {
   pinMode(i, OUTPUT);
 }
pinMode(sensorR, INPUT);
pinMode(sensorL, INPUT);
}
```

```
void forword()
{
digitalWrite(IN1, HIGH);
digitalWrite(IN2, LOW);
digitalWrite(IN3, HIGH);
digitalWrite(IN4, LOW);
analogWrite(speedL,150);
analogWrite(speedR,150);
}
void backword()
{
digitalWrite(IN1, LOW);
digitalWrite(IN2, HIGH);
digitalWrite(IN3, LOW);
digitalWrite(IN4, HIGH);
analogWrite(speedL,150);
analogWrite(speedR,150);
}
```

```
void left()
{
digitalWrite(IN1, LOW);
digitalWrite(IN2, LOW);
digitalWrite(IN3, HIGH);
digitalWrite(IN4, LOW);
analogWrite(speedL,0);
analogWrite(speedR,150);
}
void right()
{
digitalWrite(IN1, HIGH);
digitalWrite(IN2, LOW);
digitalWrite(IN3, LOW);
digitalWrite(IN4, LOW);
analogWrite(speedL,150);
analogWrite(speedR,0);
}
```

```
void stopp(){
digitalWrite(IN1, LOW);
digitalWrite(IN2, LOW);
digitalWrite(IN3, LOW);
digitalWrite(IN4, LOW);
analogWrite(speedL,0);
analogWrite(speedR,0);
}
void loop(){
sl=digitalRead(sensorL);
sr=digitalRead(sensorR);
if (sl==0&&sr==0)
forword();
else if (sl==0&&sr==1)
right();
else if (sl==1&&sr==0)
left();
else if (sl==1&&sr==1)
stopp();  }
```

# • Obstacle avoiding robot

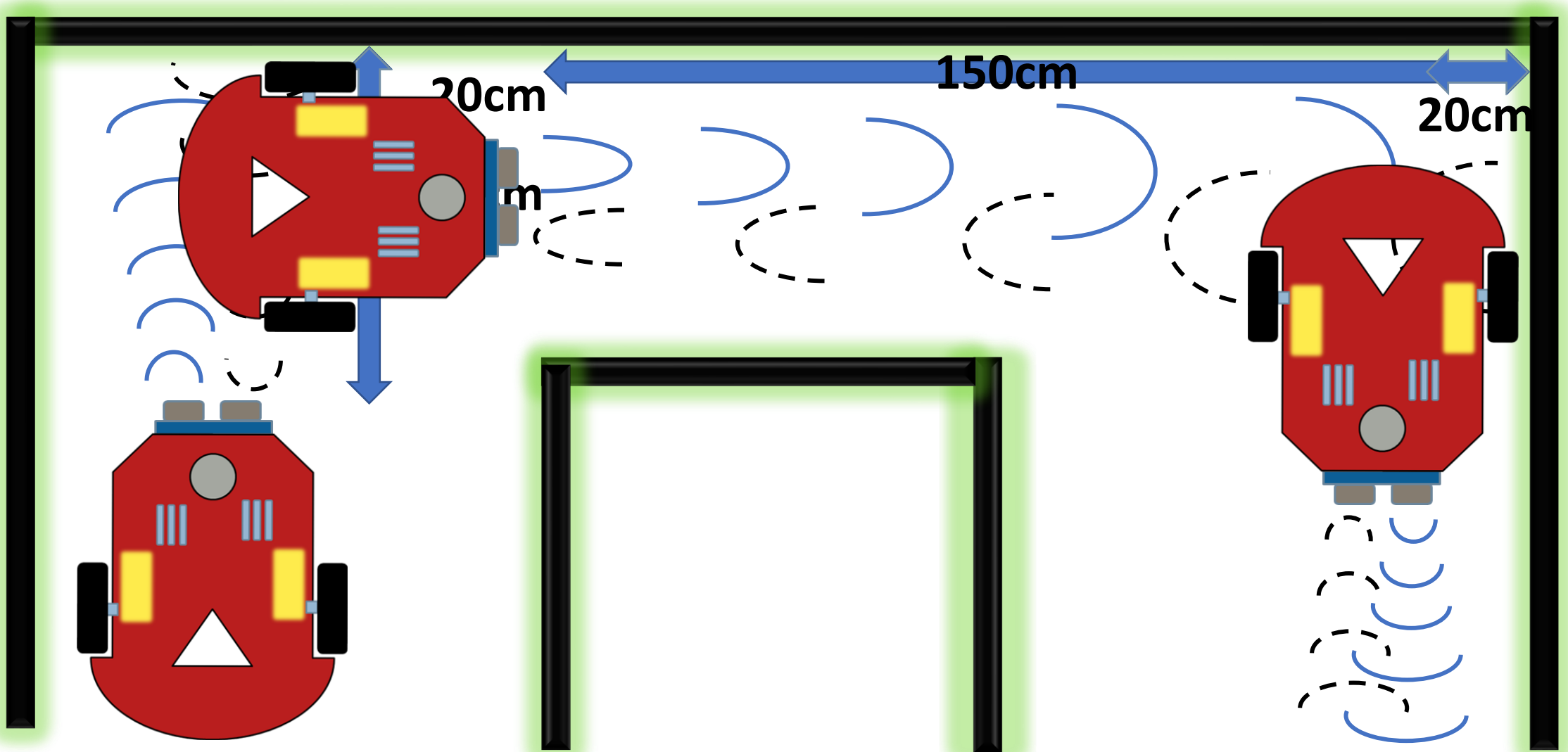

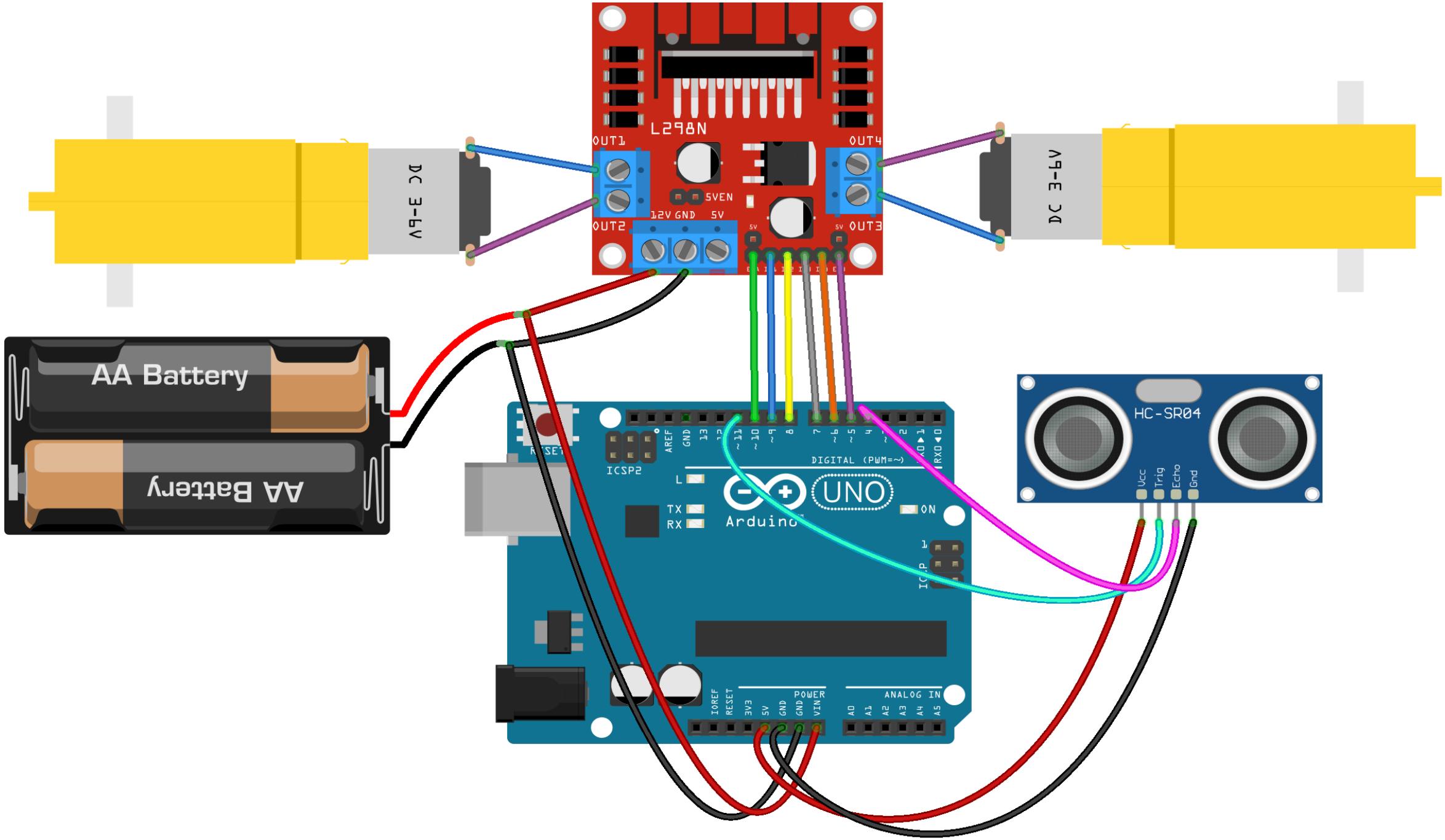
L298N
OUT1
OUT2
OUT3
OUT4
5VEN
12V GND 5V
DC 3-6V
DC 3-6V
AA Battery
AA Battery
HC-SR04
Vcc
Trig
Echo
Gnd
UNO
Arduino
DIGITAL (PWM=~)
POWER
ANALOG IN
ICSP2
ON
TX
RX

# • Obstacle Avoiding Code

```
#define speedL 10
#define IN1 9
#define IN2 8
#define IN3 7
#define IN4 6
#define speedR 5
#define trig 11
#define echo 4
long duration,distance;
void setup() {
for(int i=5 ; i<=11 ; i++)
 {
   pinMode(i, OUTPUT);
 }
pinMode(echo, INPUT);
}
```

```
void Ultrasonic(){
digitalWrite(trig, LOW);
delayMicroseconds(2);
digitalWrite(trig, HIGH);
delayMicroseconds(10);
digitalWrite(trig, LOW);
duration = pulseIn(echo, HIGH);
distance = (duration/2) * 0.0343;
delay(5);
}
void forword()
{
digitalWrite(IN1, HIGH);
digitalWrite(IN2, LOW);
digitalWrite(IN3, HIGH);
digitalWrite(IN4, LOW);
analogWrite(speedL,150);
analogWrite(speedR,150);
}
```

```
void backword()
{
digitalWrite(IN1, LOW);
digitalWrite(IN2, HIGH);
digitalWrite(IN3, LOW);
digitalWrite(IN4, HIGH);
analogWrite(speedL,150);
analogWrite(speedR,150);
}
void left()
{
digitalWrite(IN1, LOW);
digitalWrite(IN2, LOW);
digitalWrite(IN3, HIGH);
digitalWrite(IN4, LOW);
analogWrite(speedL,0);
analogWrite(speedR,150);
}
```

```
void right()
{
digitalWrite(IN1, HIGH);
digitalWrite(IN2, LOW);
digitalWrite(IN3, LOW);
digitalWrite(IN4, LOW);
analogWrite(speedL,150);
analogWrite(speedR,0);
}
void stopp(){
digitalWrite(speedL, LOW);
digitalWrite(speedR, LOW);
}
void loop(){
Ultrasonic();
if(distance<20){
   stopp(); delay(250);
   backword();delay(500);
   right(); delay(1000);
  }
else{ forword(); }
}
```

# • Task

- Prepare the codes for experimentation in the next lecture

# THANKS FOR COMING