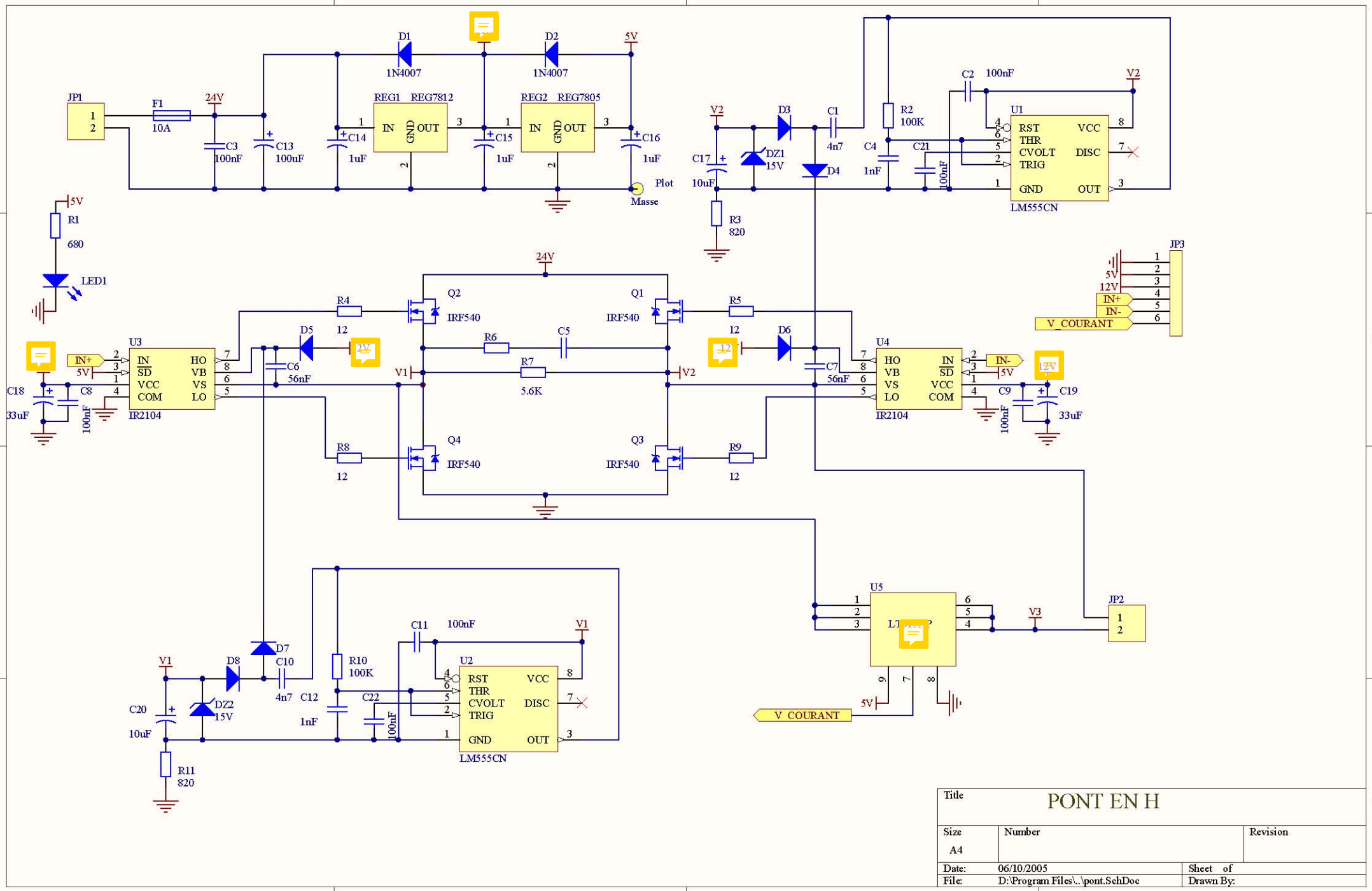

Title	PONT EN H	
Size A4	Number	Revision
Date: 06/10/2005		Sheet of
File: D:\Program Files\..\pont.SchDoc		Drawn By: