APPROVAL DRAWING	
DATE :	DATE :
( ) (	
PT. CAT	

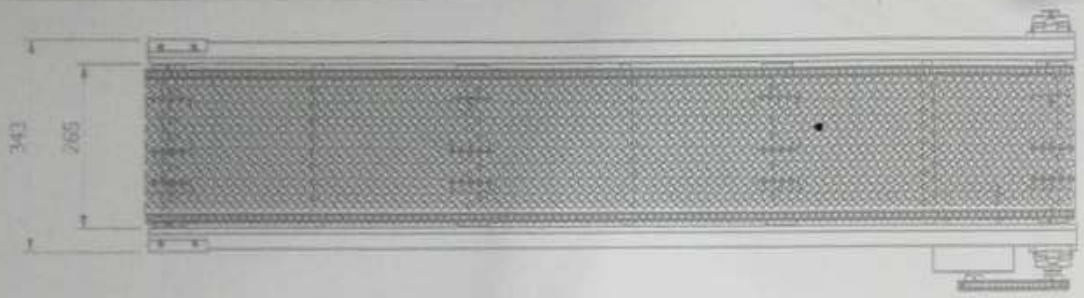

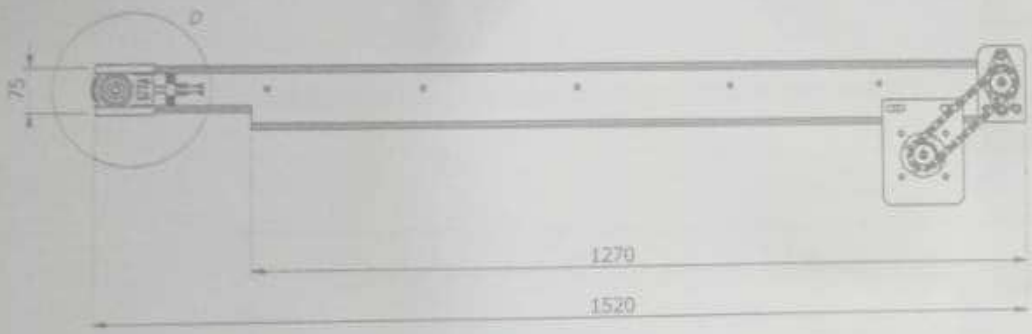

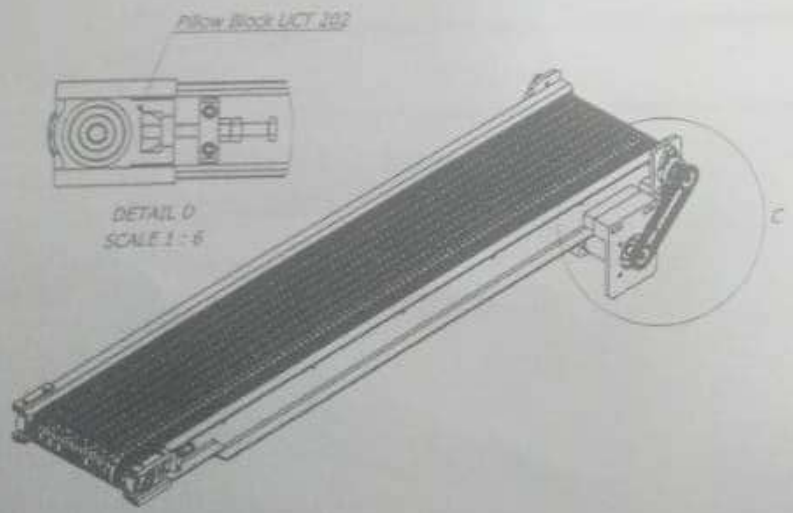

DETAIL D
SCALE 1 : 6

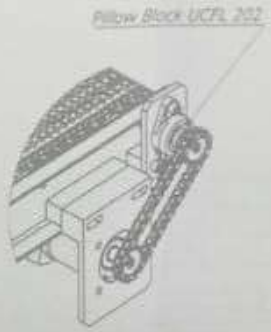

MOTOR PENGGERAK
DETAIL C
SCALE 1 : 10

NO.	SUB NO.	PART NAME	QTY	MATERIAL	FINISH DIMENSION	TREATMENT	REMARK
32		Set Screw		BAJA	M6 x 10		
31		Set Screw	24	BAJA	M6 x 12		
30		Countersunk Bolt	8	BAJA	M4 x 8		
29		Socket Head bolt	4	BAJA	M6 x 20		
28		Socket Head Bolt	4	BAJA	M10 x 30		
27		Socket Head Bolt	4	BAJA	M22 x 20		
26		Hex Bolt	2	BAJA	M10 x 100		
25		Nut	4	BAJA	M10		
24		Bolt L	30	BAJA	M8 x 20		
23		Shaping	8	STD	H06		
22		Bearing	10	SKF	6002		
21		Chain	1	STDEL	RS 40		
20		Sprocket X140 Z11	2	S540E	RS 40 Z 11		
19		Sprocket RS 40 Z14	8	S540E	RS 40 Z 14		
18		Pillow Block	2	SKF	UCFL 202		
17		Pillow Block	2	SKF	UCT 202		
16		Worpback Conveyor	1	SUS304	Dia 2		
15		Stopper Pillow Block Belakang	4	S540E	13.5 x 19 x 35		
14		Bracket Motor	1	S540E	41 x 175 x 150	PLATING	
13		Kamar 2	2	S540E	75 x 8 x 20		
12		Kamar 1	4	S540E	75 x 8 x 20		
11		Stopper Roller Belakang - HC Blue	2	HC BLUE	Dia. 20 x 70		
10		Stopper Roller Tengah - HC Blue	10	HC BLUE	Dia. 20 x 3		
9		Stopper Roller Depan - HC Blue	2	HC BLUE	Dia. 20 x 49		
8		Adjuster Roller Belakang	2	S540E	15 x 20 x 51		
7		Support Roller	12	HC BLUE	Dia. 72.5 x 20		
6		Shaft Roll Depan	1	SUS304	Dia. 20 x 450		
5		Shaft Roll Tengah	1	SUS304	Dia. 20 x 320		
4		Shaft Roll Belakang	1	SUS304	Dia. 20 x 240		
3		Bracket Pillow Block Motor	2	S540E	10 x 80 x 130	PLATING	
2	—	Frame New Conveyor Downside	1	S540E	30 x 50 x 120		
	—		1	S540E	25 x 50 x 80		
	—		1	S540E	75 x 140 x 1520		
1	—	Frame New Conveyor	1	S540E	25 x 20 x 50		
	—		1	S540E	75 x 160 x 1520		

PT. CEMERLANG ABADI TEKNIDO
MECHANICAL - AUTOMATION - ELECTRIC SYSTEM

MATERIAL	S540E	NAME	SIGN	DATE	CUSTOMER
QTY	1 UNIT	APPROVED	SP ATMOJO		PT. RYOGA
DATE	04 - 10 - 2024	CHECKED	BUDI		APPLICATION / ASSEMBLY NAME
HARDEN		DRAWN	DEDE		DEPT
		PART NAME	CONVEYOR		SCALE
					DWG. NO. CAT-101.18.1024-0401