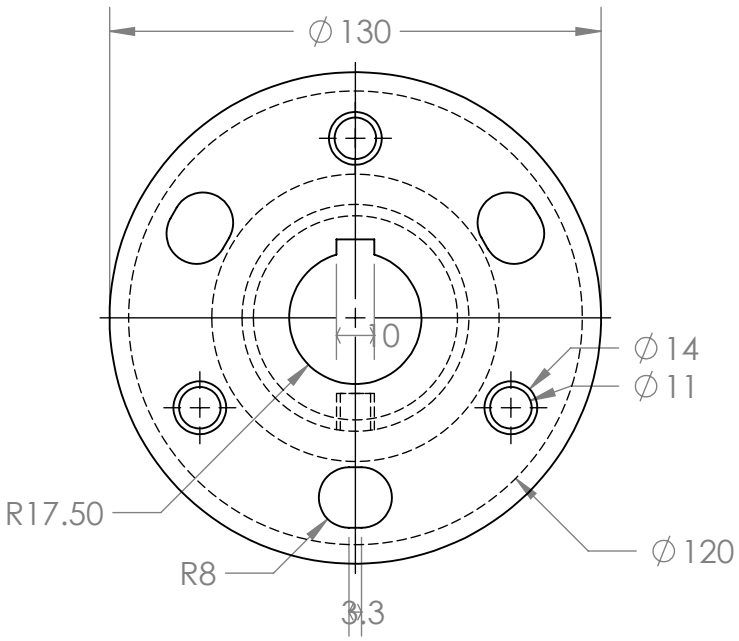

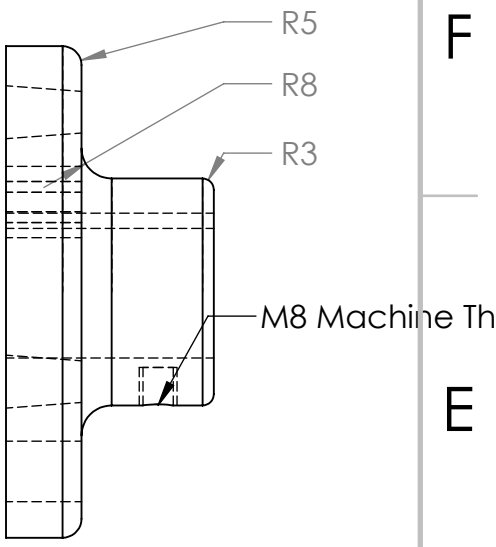

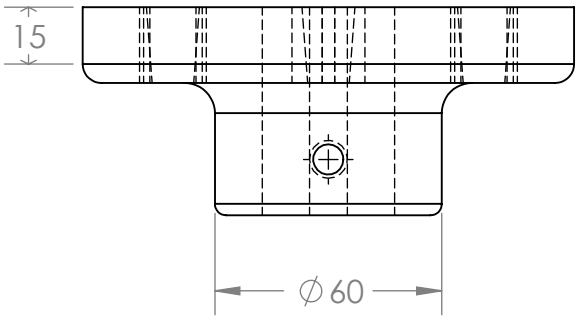

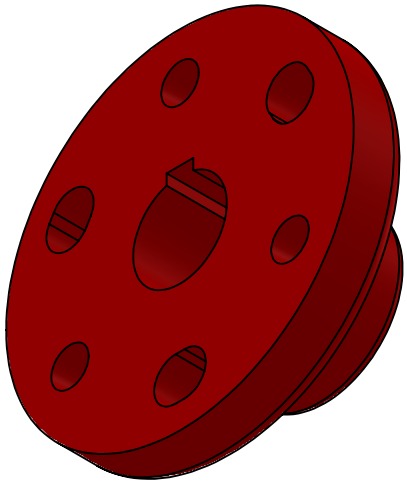

UNLESS OTHERWISE SPECIFIED: DIMENSIONS ARE IN MILLIMETERS SURFACE FINISH: TOLERANCES: LINEAR: ANGULAR:	FINISH:		DEBURR AND BREAK SHARP EDGES	DO NOT SCALE DRAWING	REVISION
	NAME	SIGNATURE	DATE	TITLE:	
DRAWN	Abd-Ulrahman Moustafa Mohamed	Abd-Ulrahman	13/5/2021	Flange	
CHK'D					
APPV'D					
MFG					
Q.A			MATERIAL:	DWG NO. Part2	A4
			WEIGHT:	SCALE:1:2	SHEET 1 OF 1