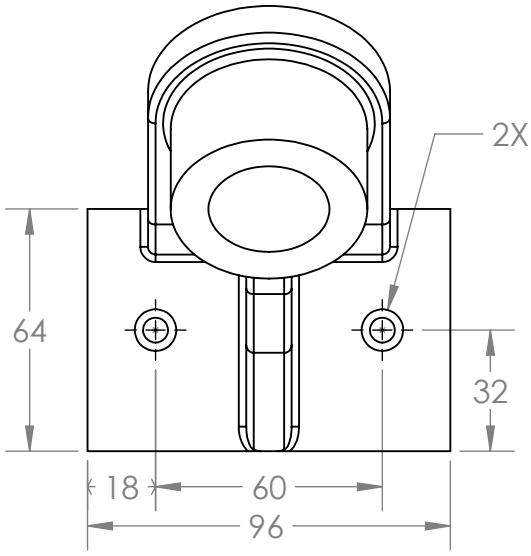

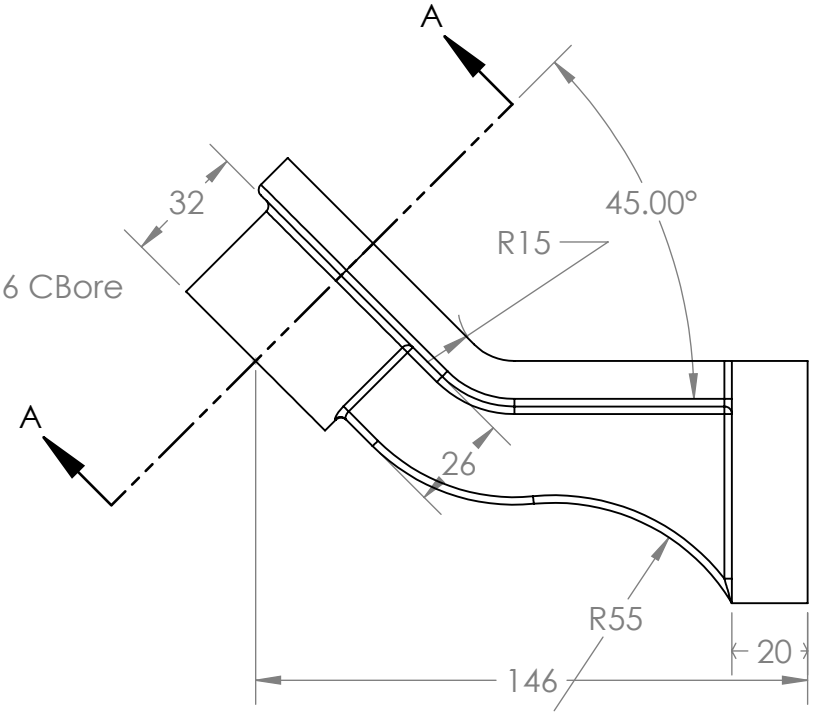

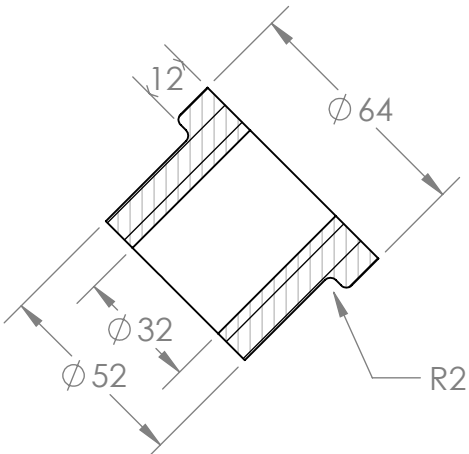

SECTION A-A

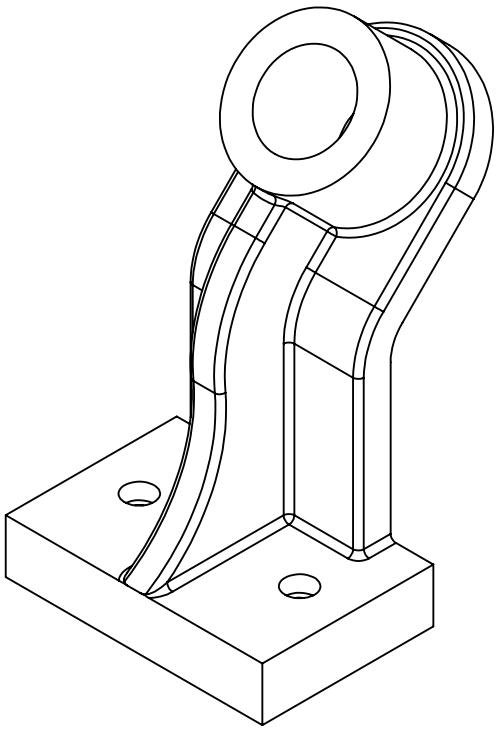

UNLESS OTHERWISE SPECIFIED: DIMENSIONS ARE IN MILLIMETERS SURFACE FINISH: TOLERANCES: LINEAR: ANGULAR:	FINISH:		DEBURR AND BREAK SHARP EDGES	DO NOT SCALE DRAWING	REVISION
	NAME	SIGNATURE	DATE	TITLE:	
DRAWN	Abd-ulrahman Moustafa Mohammed	Abdo	14/4/2021	Sec 4	
CHK'D					
APPV'D					
MFG					
Q.A			MATERIAL:	DWG NO.	A4
				Part1	
			WEIGHT:	SCALE:1:2	SHEET 1 OF 1