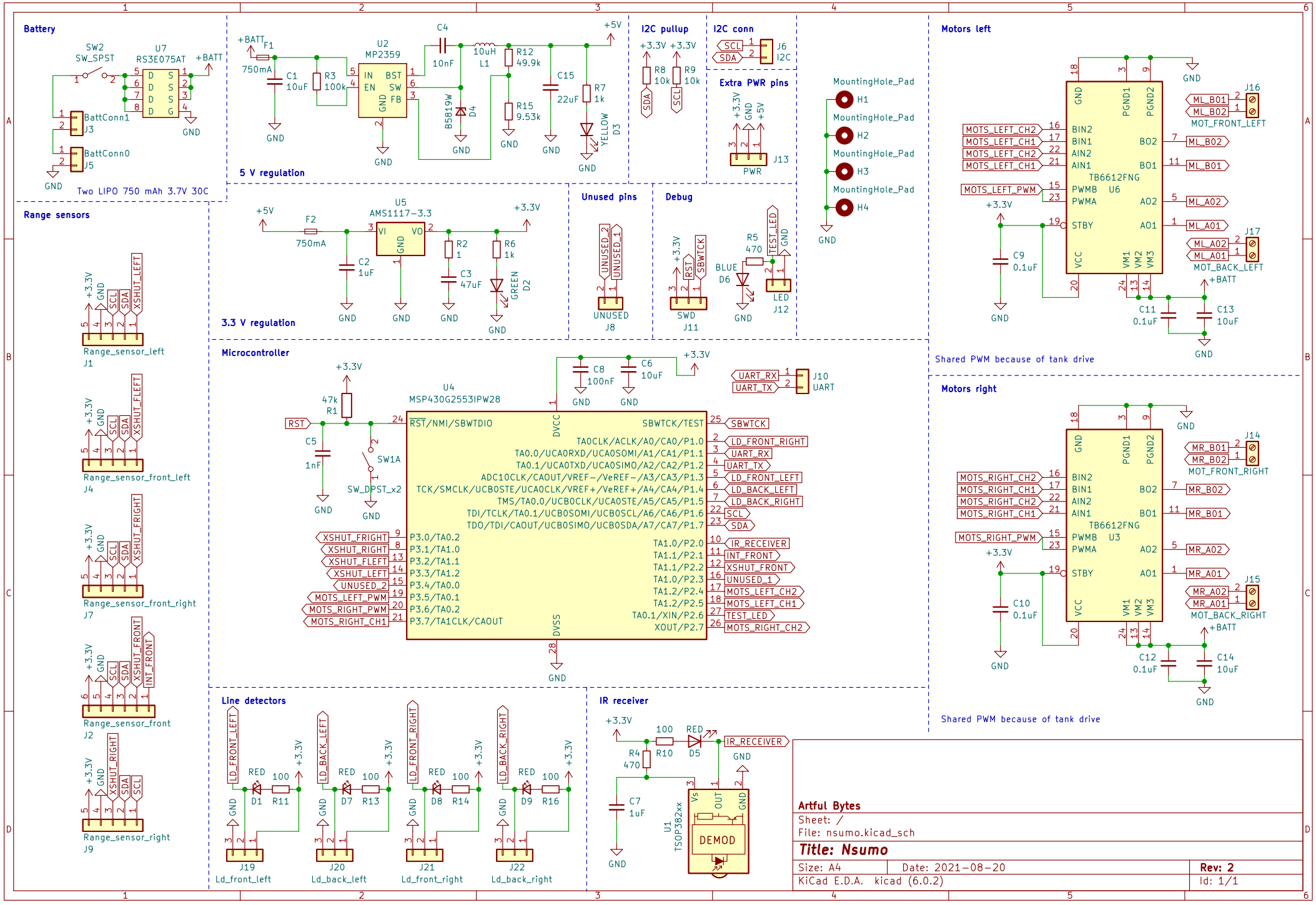
Battery
SW2
SW_SPST
U7
RS3E075AT
+BATT
BattConn1
J3
BattConn0
J5
GND
Two LIPO 750 mAh 3.7V 30C
5 V regulation
F1
750mA
C1
10uF
R3
100k
U2
MP2359
IN
EN
BST
SW
GND
FB
C4
10nF
10uH
L1
B5819W
D4
R12
49.9k
R15
9.53k
C15
22uF
R7
1k
YELLOW
D3
+5V
I2C pullup
+3.3V
R8
10k
R9
10k
SDA
SCL
I2C conn
J6
I2C
Extra PWR pins
J13
PWR
MountingHole_Pad
H1
H2
H3
H4
Motors left
MOTS_LEFT_CH2
MOTS_LEFT_CH1
MOTS_LEFT_PWM
TB6612FNG
PWMB
PWMA
STBY
VCC
GND
PGND1
PGND2
BIN2
BIN1
AIN2
AIN1
BO2
BO1
AO2
AO1
VM1
VM2
VM3
U6
C9
0.1uF
C11
0.1uF
C13
10uF
J16
MOT_FRONT_LEFT
J17
MOT_BACK_LEFT
ML_B01
ML_B02
ML_A02
ML_A01
Shared PWM because of tank drive
Range sensors
Range_sensor_left
J1
Range_sensor_front_left
J4
Range_sensor_front_right
J7
Range_sensor_front
J2
Range_sensor_right
J9
XSHUT_LEFT
XSHUT_FLEFT
XSHUT_FRIGHT
XSHUT_FRONT
INT_FRONT
XSHUT_RIGHT
3.3 V regulation
U5
AMS1117-3.3
VI
VO
F2
750mA
C2
1uF
R2
1
C3
47uF
R6
1k
GREEN
D2
Unused pins
UNUSED_2
UNUSED_1
UNUSED
J8
Debug
RST
SBWTCK
SWD
J11
R5
470
TEST_LED
BLUE
D6
LED
J12
Motors right
MOTS_RIGHT_CH2
MOTS_RIGHT_CH1
MOTS_RIGHT_PWM
U3
C10
0.1uF
C12
0.1uF
C14
10uF
J14
MOT_FRONT_RIGHT
J15
MOT_BACK_RIGHT
MR_B01
MR_B02
MR_A02
MR_A01
Microcontroller
U4
MSP430G2553IPW28
47k
R1
C5
1nF
SW1A
SW_DPST_x2
C8
100nF
C6
10uF
UART_RX
UART_TX
J10
UART
RST/NMI/SBWTDIO
DVCC
DVSS
SBWTCK/TEST
TA0CLK/ACLK/A0/CA0/P1.0
TA0.0/UCA0RXD/UCA0SOMI/A1/CA1/P1.1
TA0.1/UCA0TXD/UCA0SIMO/A2/CA2/P1.2
ADC10CLK/CAOUT/VREF-/VeREF-/A3/CA3/P1.3
TCK/SMCLK/UCB0STE/UCA0CLK/VREF+/VeREF+/A4/CA4/P1.4
TMS/TA0.0/UCB0CLK/UCA0STE/A5/CA5/P1.5
TDI/TCLK/TA0.1/UCB0SOMI/UCB0SCL/A6/CA6/P1.6
TDO/TDI/CAOUT/UCB0SIMO/UCB0SDA/A7/CA7/P1.7
P3.0/TA0.2
P3.1/TA1.0
P3.2/TA1.1
P3.3/TA1.2
P3.4/TA0.0
P3.5/TA0.1
P3.6/TA0.2
P3.7/TA1CLK/CAOUT
TA1.0/P2.0
TA1.1/P2.1
TA1.1/P2.2
TA1.0/P2.3
TA1.2/P2.4
TA1.2/P2.5
TA0.1/XIN/P2.6
XOUT/P2.7
LD_FRONT_RIGHT
LD_FRONT_LEFT
IR_RECEIVER
INT_FRONT
XSHUT_FRONT
UNUSED_1
MOTS_LEFT_CH2
MOTS_LEFT_CH1
TEST_LED
MOTS_RIGHT_CH2
Line detectors
LD_FRONT_LEFT
LD_BACK_LEFT
LD_FRONT_RIGHT
LD_BACK_RIGHT
RED
100
D1
R11
D7
R13
D8
R14
D9
R16
J19
Ld_front_left
J20
Ld_back_left
J21
Ld_front_right
J22
Ld_back_right
IR receiver
R4
470
R10
D5
C7
1uF
U1
TSOP382xx
Vs
OUT
DEMOD
Artful Bytes
Sheet: /
File: nsumo.kicad_sch
Title: Nsumo
Size: A4
Date: 2021-08-20
Rev: 2
KiCad E.D.A. kicad (6.0.2)
Id: 1/1