Bangladesh University of Engineering and Technology

Department of Electrical and Electronic Engineering

EEE 414 (January 2024)

Electrical Service Design

Final Project Report

Section: A2 Group: 05

Electrical Services Design of a 11 Storied, 3 Unit Residential Building

---

Course Instructors:
Yeasir Arafat (Associate Professor)
Saif Ahmed Sunny (PT)

Signature of Instructor: _____

_____

"In signing this statement, We hereby certify that the work on this project is our own and that we have not copied the work of any other students (past or present), and cited all relevant sources while completing this project. We understand that if we fail to honor this agreement, We will each receive a score of ZERO for this project and be subject to failure of this course."

Signature:

Full Name: Nilotpaul Kundu Dhrubo

Student ID: 1906060

Signature:

Full Name: Md. Nafis Kama

Student ID: 190606061

Signature:

Full Name: Md. Abdul Jabber Antor

Student ID: 1906062

Signature:

Full Name: Md. Enamul Atiq Enam

Student ID: 1906063

Signature :

Full Name: Ismam Nur Swapnil

Student ID: 1906064

Signature :

Full Name: Anindya Alam

Student ID: 1906065

Objectives:

- Get to know different floor-planning maps of apartments of multi-storied or, residential building
- Understand the calculations behind various fittings and fixtures for each room in a single unit of the building
- Familiarize with a design-software for architectural and electrical designs like AutoCAD 2007
- Learn to draw circuit diagrams, conduits, emergency conduit and lightning protection extensions.
- Calculate PFI plant, Transformer, Circuit Breaker rating, wire ratings etc. using reference charts.

Design Steps:

1. Ground floor and typical floor plan of a eleven-storied building
2. Fittings and fixtures for each floor
3. Conduit layout planning for each floor
4. Emergency Conduit layout planning for each floor
5. Switchboard and distribution board diagram

Considerations:

- The initial floor plan was collected
- As part of Design considerations: Some parameters like maintenance factor, reflectance Factor, activity factors, current percentage from total SDB/ESDB, Pump ratings, lift ratings etc. were taken from reference lecture slides.
- Generator Room and Electrical Room (containing PFI Plant, Energy Meter etc.) were designed according to BNBC_2020 rule book. However, for applying optimum area adjustment some limitations were acknowledged.
- In breaker and wire rating calculation we chose ECC or, Earthing wire values in some cases in a conventional manner.

Legends and Symbols for Fittings and Fixtures

Fitting Name and Description	Caption	Symbol
LED Tube Light (20 W)	TLA	
LED Bulb (12 W)	LLA	
Ceiling Light (12 W)	CLA	
Ceiling Mounted Fluoroscent Tube Light (40 W)	FL	
Ceiling Fan (100 W)	F	
Exhaust Fan (100 W)	ExFan	
2 pin Socket (100 W)	ST (Table height), TS (Skirting Level), SS (Switchboard Socket)	
3 Pin Socket	S (P-Load), QS (Q-Load)	
Switch Board	SB	
Emergency Switch Board	ESB	
Sub Distribution Board	SDB	
Emergency Sub Distribution Board	ESDB	
Main Distribution Board	MDB	
Emergency Main Distribution Board (EMDB)	EMDB	
Riser	R	

Legends for Switch Board Diagram

Switch	
Fan Regulator	
Single Pole Circuit Breaker (SP MCB, MCCB)	
Triple Pole Circuit Breaker (TP MCB, MCCB)	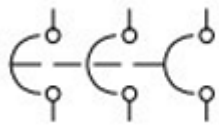
Four Pole Circuit Breaker (FP MCB, MCCB)	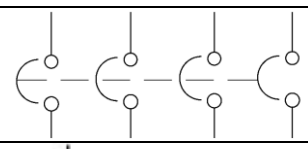
Delta to Wye Transformer	
PFI plant	
Generator	

Theory for Fittings Calculation

Lumen method of Calculating Lighting Fittings

Let,

Room Length = L (meters)
Room Width = W (meters)
N = Number of lights required
E = Luminance Level Required (Lux).
F = Average Luminous Flux from each light source (lumen)
UF = Utilization Factor (allowance for light distribution of the luminaire on the room surfaces).
LLF = Light Loss Factor
n = number of lights per luminaire.

The equation to calculate the number of fittings: $N = \frac{E \times L \times W}{n \times F \times UF \times LLF}$

We can use maintenance factor instead of LLF. $N = \frac{E \times L \times W}{n \times F \times MF \times LLF}$

We use UF x LLF = 0.7 and n = 1.

Room Index and Utilization Factor

Room Index:

Room Index= $\frac{L*W}{Mounting\ Height*(L+W)}$

Mounting height = Luminaire height – Work plane height = 9 ft – 3 ft = 6 ft = 1.828 m

Utilization Factor:

Utilization Factor: Room Surface Reflectance values,

For ceiling (C) = 0.7,

For wall (W) = 0.5

For floor(F) = 0.2

Utilization factor											
Room Reflectance			Room Index								
Ceiling	Wall	Floor	0.75	1	1.25	1.5	2	2.5	3	4	5
0.7	0.5	0.2	0.43	0.49	0.55	0.6	0.66	0.71	0.75	0.8	0.83

(i) From the tabular data shown above, we can readily determine the utilization factor for a particular room index for the given C, W and F values.

(ii) We can use interpolation method to determine UF values for corresponding calculated RI values. In some cases, extrapolation happens but the UF values found are approximately close in both cases.

(iii) In our lab, we were asked to use a common value for Light Loss Factor(LLF) x Utilization Factor(UF) for common households. We were told to use LLF x UF = 0.7

(iv) We added additional lights in rooms to account for variations in furniture placements, user comfort, user brightness requirement etc.

Fan Calculation

The equation to calculate the number of fans in a room is given by:

$$N = \frac{L\ (\text{in ft.}) \times W\ (\text{in ft.})}{100}$$

Single Unit Plan

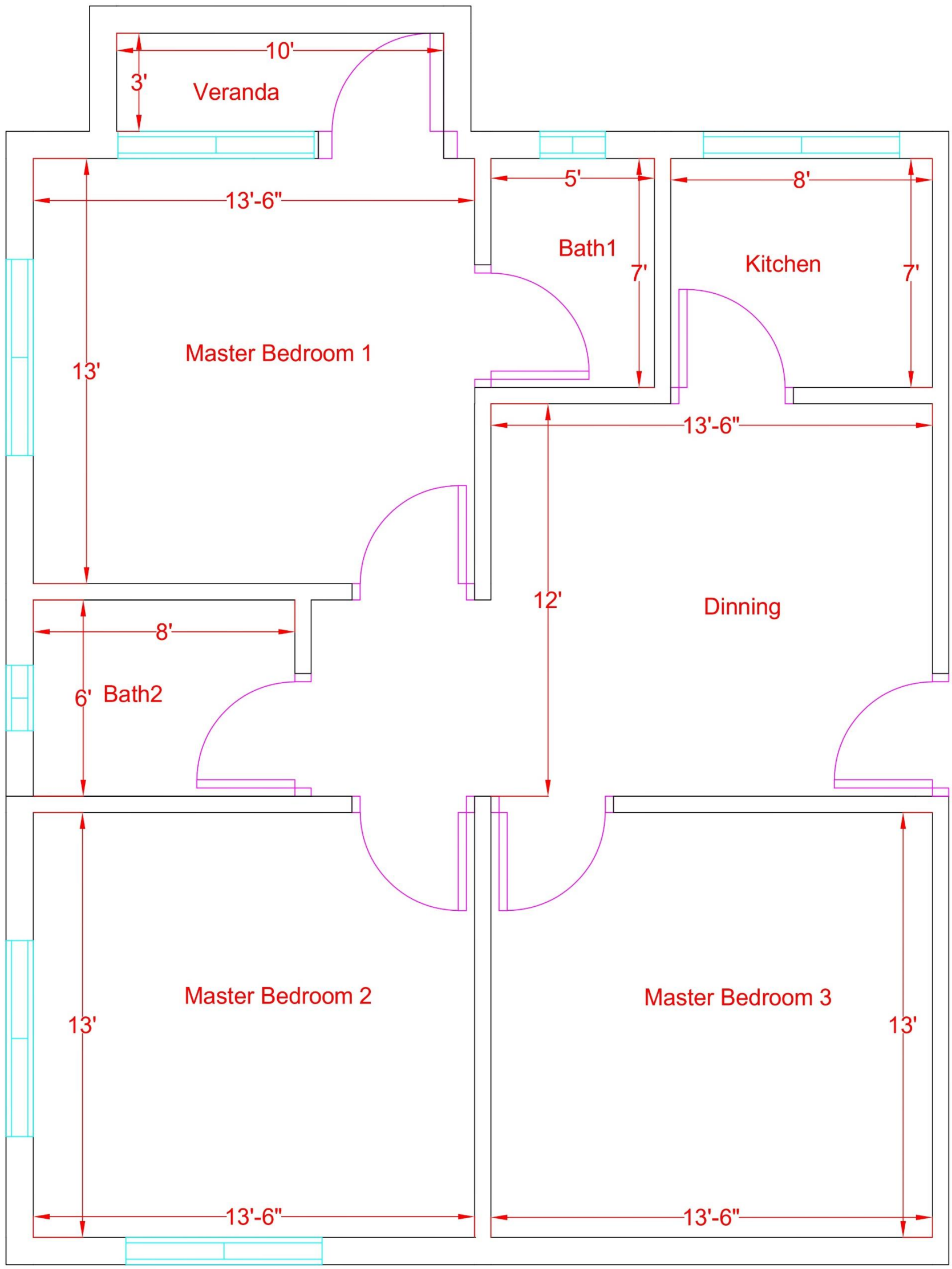

Fitting Calculation

Common Floor	Room Type	Length (ft)	Width (ft)	Area (sq.ft)	Length (m)	Width (m)	Area (sq.m)	Room Index	UF x LLF	Luminance Level (E)	Total Lumen	Assigned Lights and Types	Number of Fans/.sqft
	Master Bedroom 1	13.5	13	175.5	4.1148	3.9624	16.3044835	1.009	0.7	70	1630.448352	1TLA, 1LLA	1
	Master Bedroom 2	13.5	13	175.5	4.1148	3.9624	16.3044835	1.009	0.7	70	1630.448352	1TLA, 1LLA	1
	Master Bedroom 3	13.5	13	175.5	4.1148	3.9624	16.3044835	1.009	0.7	70	1630.448352	1TLA, 1LLA	1
	Bath (MB1)	5	7	35	1.524	2.1336	3.2516064	0.4445	0.7	100	464.5152	LLA	0
	Common Bath	8	6	48	2.4384	1.8288	4.45934592	0.5225	0.7	100	637.0494171	LLA	0
	Veranda(MB1)	10	3	30	3.048	0.9144	2.7870912	0.3516	0.7	100	398.1558857	LLA	0
	Dinning	13.5	12	162	4.1148	3.6576	15.0502925	0.9681	0.7	150	3225.062674	1 TLA, 2LLA	1
	Kitchen	8	7	56	2.4384	2.1336	5.20257024	0.5689	0.7	200	1486.44864	1TLA, 1LLA	0
Lobby	Lobby Area	22.833	12.5	285.4125	6.9594984	3.81	26.5156889	1.231	0.7	100	3787.955558	4 CLA	2
	Stairs	12.5	11	137.5	3.81	3.3528	12.774168	0.8917	0.7	100	1824.881143	2 CLA	1
Basement	Parking, Drive way			3809.59			353.9		0.7	100	50557.14286	16 FL	
	Staff Toilet	4.04	7	28.28	1.231392	2.1336	2.62729797	0.3903	0.7	100	375.3282816	1LLA	0
	Staff Room	9.96	12.33	122.8068	3.035808	3.758184	11.4091251	0.8396	0.7	70	1140.912505	1 TLA	1
	Security Room	4.04	4.833	19.52532	1.231392	1.473098	1.81396158	0.3353	0.7	70	181.3961585	1 LLA	0
	Waiting Room	10	12.33	123.3	3.048	3.758184	11.4549448	0.8415	0.7	70	1145.494483	1 TLA	1
													0
Ground Floor	Parking, Drive way			3249.33			301.95		0.7	100	43135.71429	14 FL	
	Generator Room	16.583	16	265.328	5.0544984	4.8768	24.6497778	1.2410	0.7	100	3521.396828	1 TLA, 1 LLA	2
	Transformer Room	15.167	22.04	334.28068	4.6229016	6.717792	31.0556914	1.369	0.7	100	4436.527341	2 TLA,1LLA	3
	LT Switch Gear	5.25	6	31.5	1.6002	1.8288	2.92644576	0.4267	0.7	100	418.06368	1 LLA	0
	HT Switch Gear	7.833	6	46.998	2.3874984	1.8288	4.36625707	0.5177	0.7	100	623.7510106	1 LLA	0
	HT Meter Panel	15	13.833	207.495	4.572	4.216298	19.2769163	1.0967	0.7	100	2753.845184	1 TLA, 1 LLA	2

Single Unit Fittings

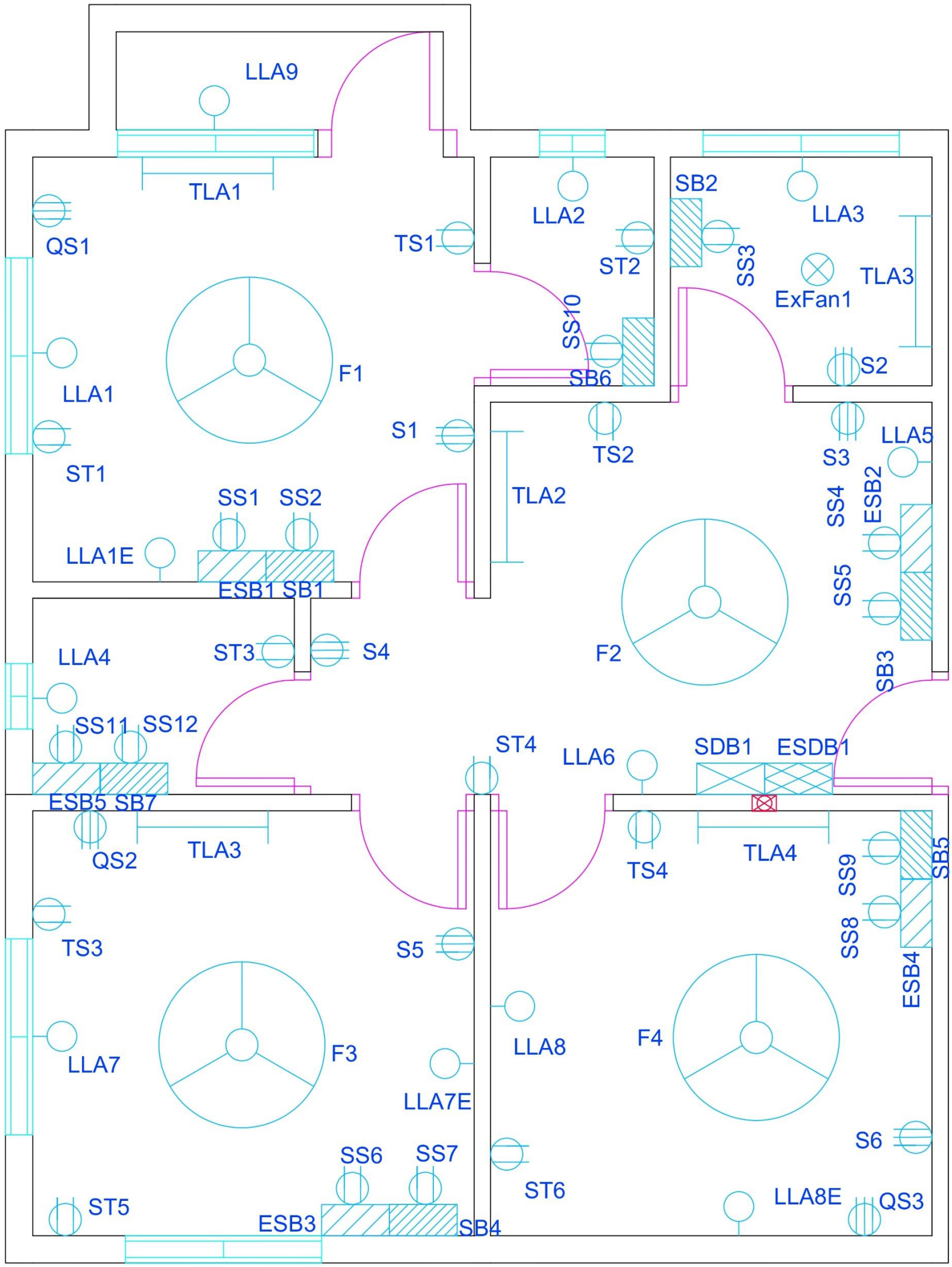

Conduit and Switch Board Calculations for One Unit

Main Conduit for a Unit:

Master Bedroom1 & Veranda	SB1				
Appliances	**Quantity**	**Power per head**	**Power**	**Current Rating**	**Conduit**
Fan(F1)	1	100	100	0.543478261	C1
TV socket (TS1)	1	100	100	0.543478261	C1
Tube Light (TLA1)	1	20	20	0.108695652	C1
LED light (LLA1,LLA9)	2	12	24	0.130434783	C1
Table Socket (ST1)	1	100	100	0.543478261	C1
SwitchBoard Socket (SS2)	1	100	100	0.543478261	C1
		Total-->	444	2.413043478	C8

Bath1	SB6				
Appliances	**Quantity**	**Power per head**	**Power**	**Current Rating**	**Conduit**
LED light (LLA2)	1	12	12	0.065217391	C1
Table Socket (ST2)	1	100	100	0.543478261	C1
SwitchBoard Socket (SS10)	1	100	100	0.543478261	C1
		Total-->	212	1.152173913	C8

Master Bedroom2	SB4				
Appliances	**Quantity**	**Power per head**	**Power**	**Current Rating**	**Conduit**
Fan(F3)	1	100	100	0.543478261	C1
TV socket (TS3)	1	100	100	0.543478261	C1
Tube Light (TLA3)	1	20	20	0.108695652	C1
LED light (LLA7E)	1	12	12	0.065217391	C1
SwitchBoard Socket (SS7)	1	100	100	0.543478261	C1
		Total-->	332	1.804347826	C8

Bath2	SB7				
Appliances	**Quantity**	**Power per head**	**Power**	**Current Rating**	**Conduit**
Table Socket (ST3)	1	100	100	0.543478261	C1
SwitchBoard Socket (SS12)	1	100	100	0.543478261	C1
		Total-->	200	1.086956522	C8

Kitchen	SB2				
Appliances	**Quantity**	**Power per head**	**Power**	**Current Rating**	**Conduit**
Fan(ExFan1)	1	40	40	0.217391304	C1
Tube Light (TLA3)	1	20	20	0.108695652	C1
LED light (LLA3)	1	12	12	0.065217391	C1
SwitchBoard Socket (SS3)	1	100	100	0.543478261	C1
		Total-->	172	0.934782609	C8

Living Room	SB3				
Appliances	**Quantity**	**Power per head**	**Power**	**Current Rating**	**Conduit**
Fan(F2)	1	100	100	0.543478	C1
Table Socket (ST4)	1	100	100	0.543478	C1
Tube Light (TLA2)	1	20	20	0.108696	C1
LED light (LLA6)	1	12	12	0.065217	C1
SwitchBoard Socket (SS5)	1	100	100	0.543478	C1
		Total-->	332	1.804348	C8

SDB Calculation for A Single Unit

Common Floor SDB per unit						
	Nos	**P Rating**	**Current Rating**	**Load**		**Conduit**
SB1	1	444	2.41304348	444	ckt1	C8
SB6	1	212	1.15217391	212	ckt1	C8
SB2	1	172	0.93478261	172	ckt1	C8
SB7	1	200	1.08695652	200	ckt1	C8
SB3	1	212	1.37662338	212	ckt4	C8
SB4	1	200	1.2987013	200	ckt2	C8
SB5	1	100	0.64935065	100	ckt3	C8
P load	6	3000	13.0434783	18000		C9
Q load	3	4000	17.3913043	12000		C11

Circuit	Switch Boards	Current Rating	Wire Rating	Breaker
ckt1	SB1,SB6,SB2,SB7	5.586956522	2x2.5 BYM + 1.5 ECC BYA	10A SP MCB
ckt2	SB4	1.804347826	2x1.5 BYM + 1.5 ECC BYA	5A SP MCB
ckt3	SB5	1.804347826	2x1.5 BYM + 1.5 ECC BYA	5A SP MCB
ckt4	SB3	1.804347826	2x1.5 BYM + 1.5 ECC BYA	5A SP MCB

Total SB Load -->	**1540**
Total P Load -->	**18000**
Total Q Load -->	**12000**
Total Load -->	**13678**
Current Rating -->	**74.33695652**

Emergency Conduit for a Unit:

Master Bedroom1&Veranda	**ESB1**			
Appliances	**Quantity**	**Power per head**	**Power**	**Current Rating**
LED light (LLA1E)	1	12	12	0.065217391
Table Socket (ST1)	1	100	100	0.543478261
SwitchBoard Socket (SS1)	1	100	100	0.543478261
		Total-->	212	1.152173913

Master Bedroom2	**ESB3**			
Appliances	**Quantity**	**Power per head**	**Power**	**Current Rating**
LED light (LLA7)	1	12	12	0.065217391
Table Socket (ST5)	1	100	100	0.543478261
SwitchBoard Socket (SS6)	1	100	100	0.543478261
		Total-->	212	1.152173913

Master Bedroom3	**ESB4**			
Appliances	**Quantity**	**Power per head**	**Power**	**Current Rating**
LED light (LLA8E)	1	12	12	0.065217391
Table Socket (ST6)	1	100	100	0.543478261
SwitchBoard Socket (SS8)	1	100	100	0.543478261
		Total-->	212	1.152173913

Living Room	**ESB2**			
Appliances	**Quantity**	**Power per head**	**Power**	**Current Rating**
LED light (LLA5)	1	12	12	0.065217391
TV Socket (TS2)	1	100	100	0.543478261
SwitchBoard Socket (SS4)	1	100	100	0.543478261
		Total-->	212	1.152173913

Bath2	ESB5			
Appliances	**Quantity**	**Power per head**	**Power**	**Current Rating**
LED light (LLA1E)	1	12	12	0.065217391
SwitchBoard Socket (SS1)	1	100	100	0.543478261
		Total-->	112	0.608695652

ESDB Calculation for A Single Unit

Common Floor SDB per unit					
	Nos	**P Rating**	**Current Rating**	**Load**	
ESB1	1	212	1.15217391	212	ckt1
ESB3	1	212	1.15217391	212	ckt1
ESB4	1	212	1.15217391	212	ckt1
ESB5	1	112	0.60869565	112	ckt1
ESB2	1	212	1.15217391	212	ckt2
P load	0	3000	13.0434783	0	

Circuit	Switch Boards	Current Rating	Wire Rating	Breaker
ckt1	ESB1, ESB3, ESB4, ESB5	4.065217391	2x1.5 BYM + 1.5 ECC BYA	5A SP MCB
ckt2	ESB2	1.152173913	2x1.5 BYM + 1.5 ECC BYA	5A SP MCB

Total SB Load -->	**960**
Total P Load -->	**0**
Total Q Load -->	**0**
Total Load -->	**672**
Current Rating -->	**3.652173913**

Main Conduit for the Roof Lobby:

Lobby	SB_L1			
Appliances	**Quantity**	**Power per head**	**Power**	**Current Rating**
Ceiling Light (CLA1,CLA2)	2	12	24	0.130434783
		Total-->	24	0.130434783

SDB for the Roof Lobby:

Switch Board	Nos	P Rating	Current Rating	Load
SB_L1	1	24	0.130434783	24
P load	0	3000	13.04347826	0
Q load	0	4000	17.39130435	0

Circuit	Switch Boards	Current Rating	Wire Rating	Breaker
ckt1	SB_L1	0.130434783	2x1.5 BYM + 1.5 ECC BYA	5A SP MCB

Total SB Load -->	**24**
Total P Load -->	**0**
Total Q Load -->	**0**
Total Load -->	**16.8**
Current Rating -->	**0.091304348**

Main Conduit for the Lobby:

Lobby	SB_L1			
Appliances	**Quantity**	**Power per head**	**Power**	**Current Rating**
Ceiling Light (CLA1,CLA5,CLA6)	3	12	36	0.195652174
		Total-->	36	0.195652174

Emergency Conduit for the Lobby:

Lobby	ESB_L1			
Appliances	**Quantity**	**Power per head**	**Power**	**Current Rating**
Ceiling Light (CLA2,CLA3,CLA4)	3	12	36	0.195652174
		Total-->	36	0.195652174

SDB for the Lobby:

Switch Board	Nos	P Rating	Current Rating	Load
SB_L1	1	36	0.195652174	36
P load	0	3000	13.04347826	0
Q load	0	4000	17.39130435	0

Total SB Load -->	**36**
Total P Load -->	**0**
Total Q Load -->	**0**
Total Load -->	**25.2**
Current Rating -->	**0.136956522**

Circuit	Switch Boards	Current Rating	Wire Rating	Breaker
ckt1	SB_L1	0.195652174	2x1.5 BYM + 1.5 ECC BYA	5A SP MCB

ESDB for the Lobby:

Switch Board	Nos	P Rating	Current Rating	Load
ESB_L1	1	36	0.195652174	36
P load	0	3000	13.04347826	0
Q load	0	4000	17.39130435	0

Circuit	Switch Boards	Current Rating	Wire Rating	Breaker
ckt1	ESB_L1	0.195652174	2x1.5 BYM + 1.5 ECC BYA	5A SP MCB

Total SB Load -->	**36**
Total P Load -->	**0**
Total Q Load -->	**0**
Total Load -->	**25.2**
Current Rating -->	**0.136956522**

Single Unit with Main Conduit

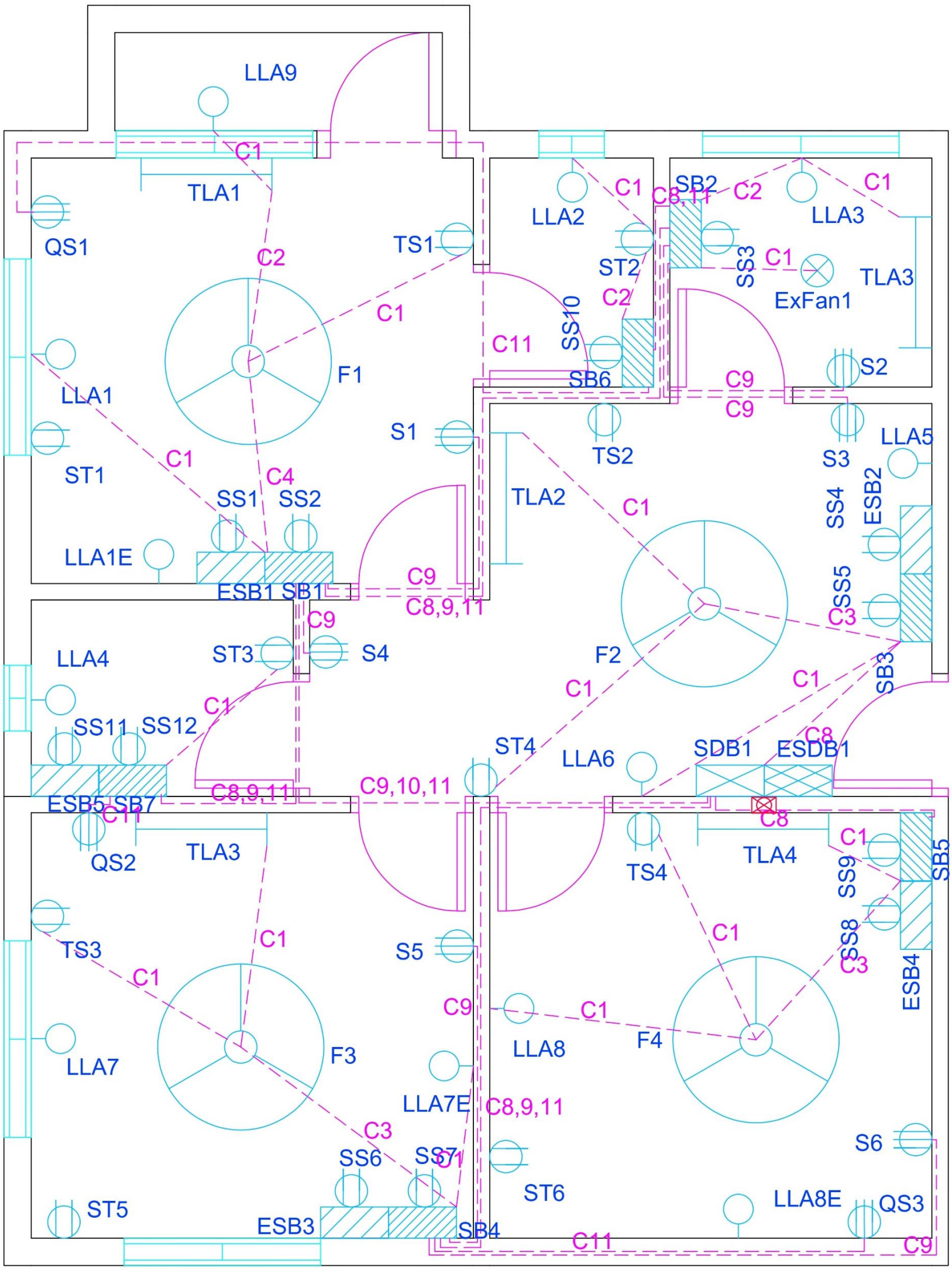

Single Unit with Emergency Conduit

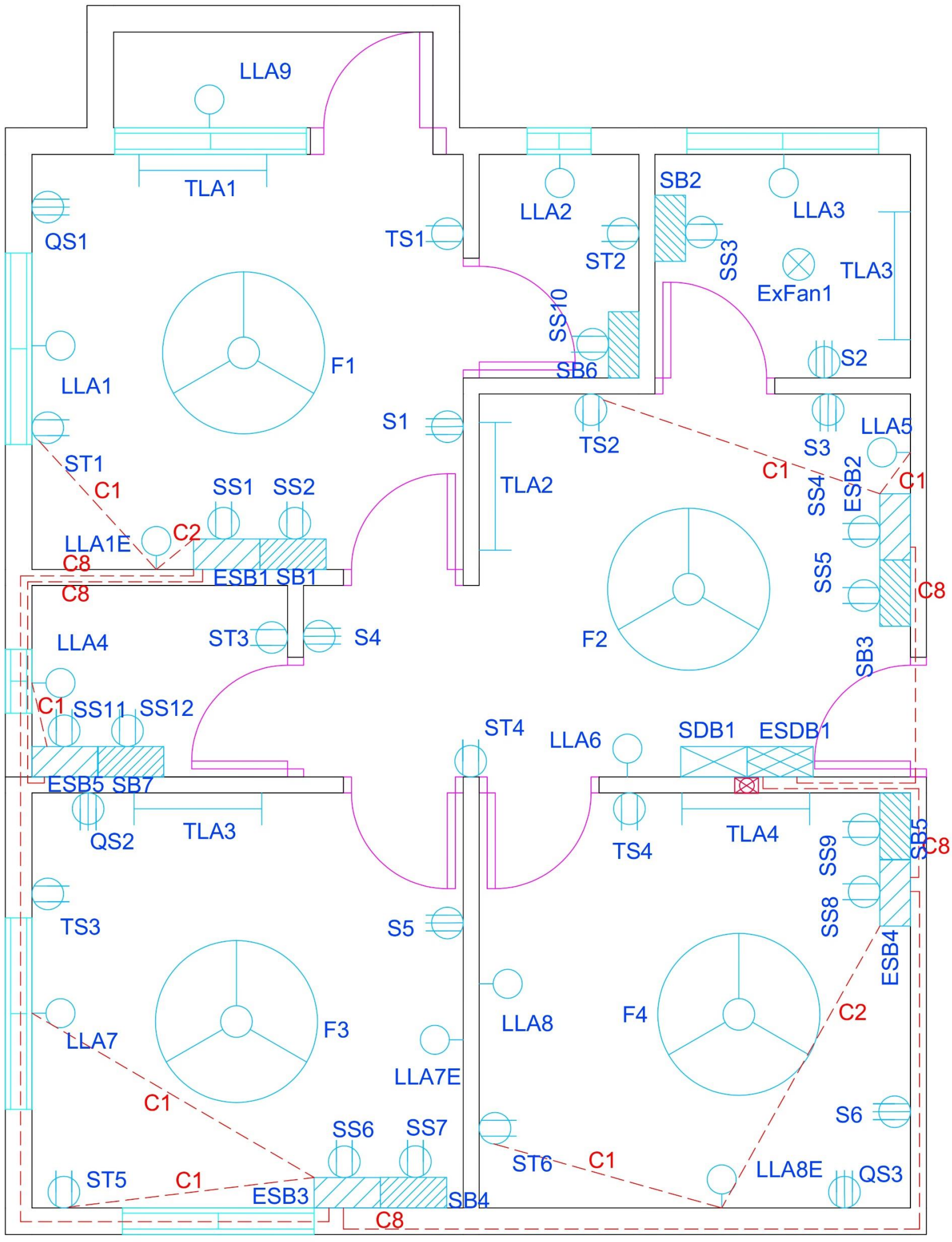

Complete Floor Plan

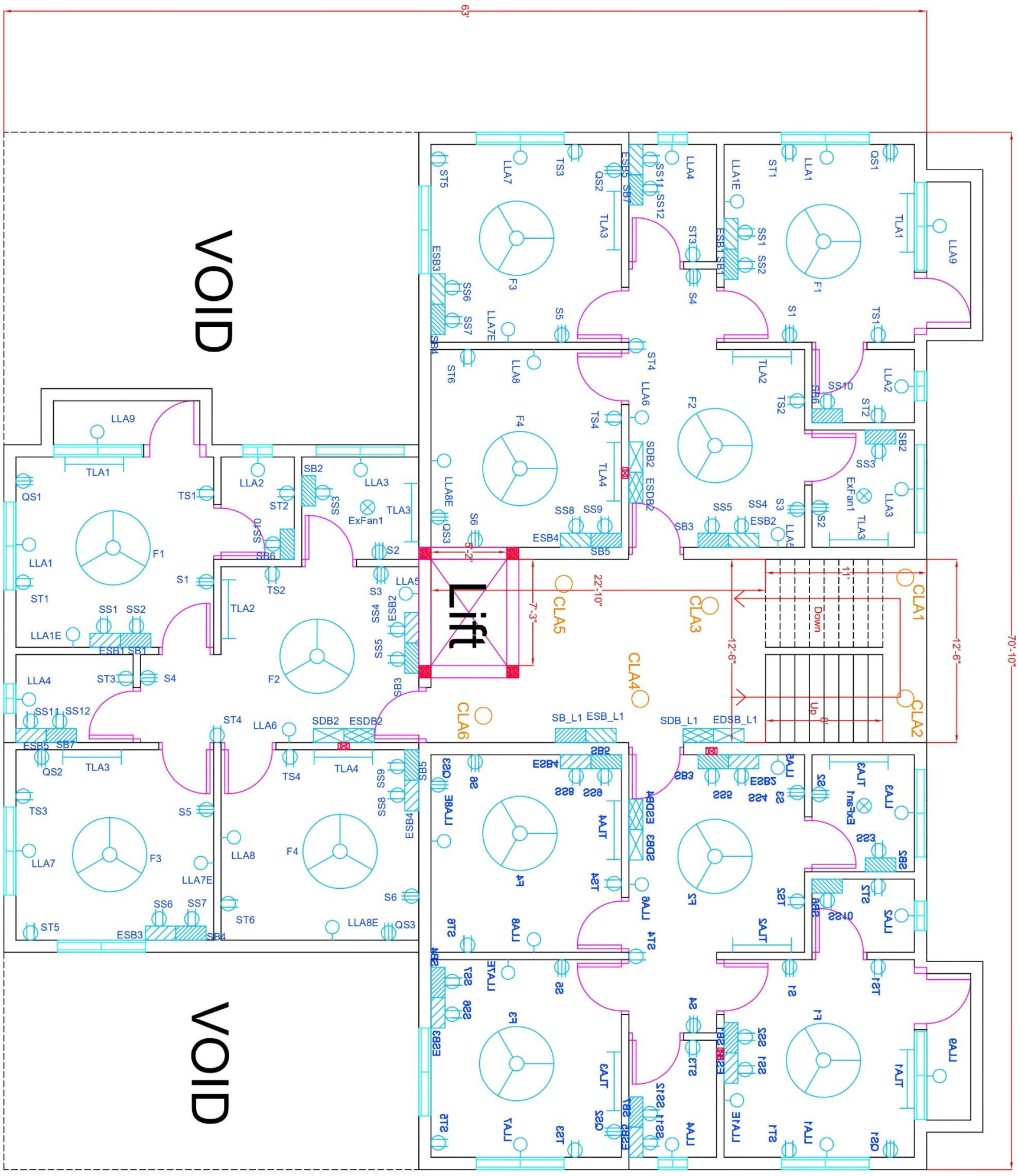

Complete Floor Plan with Conduit and Fittings

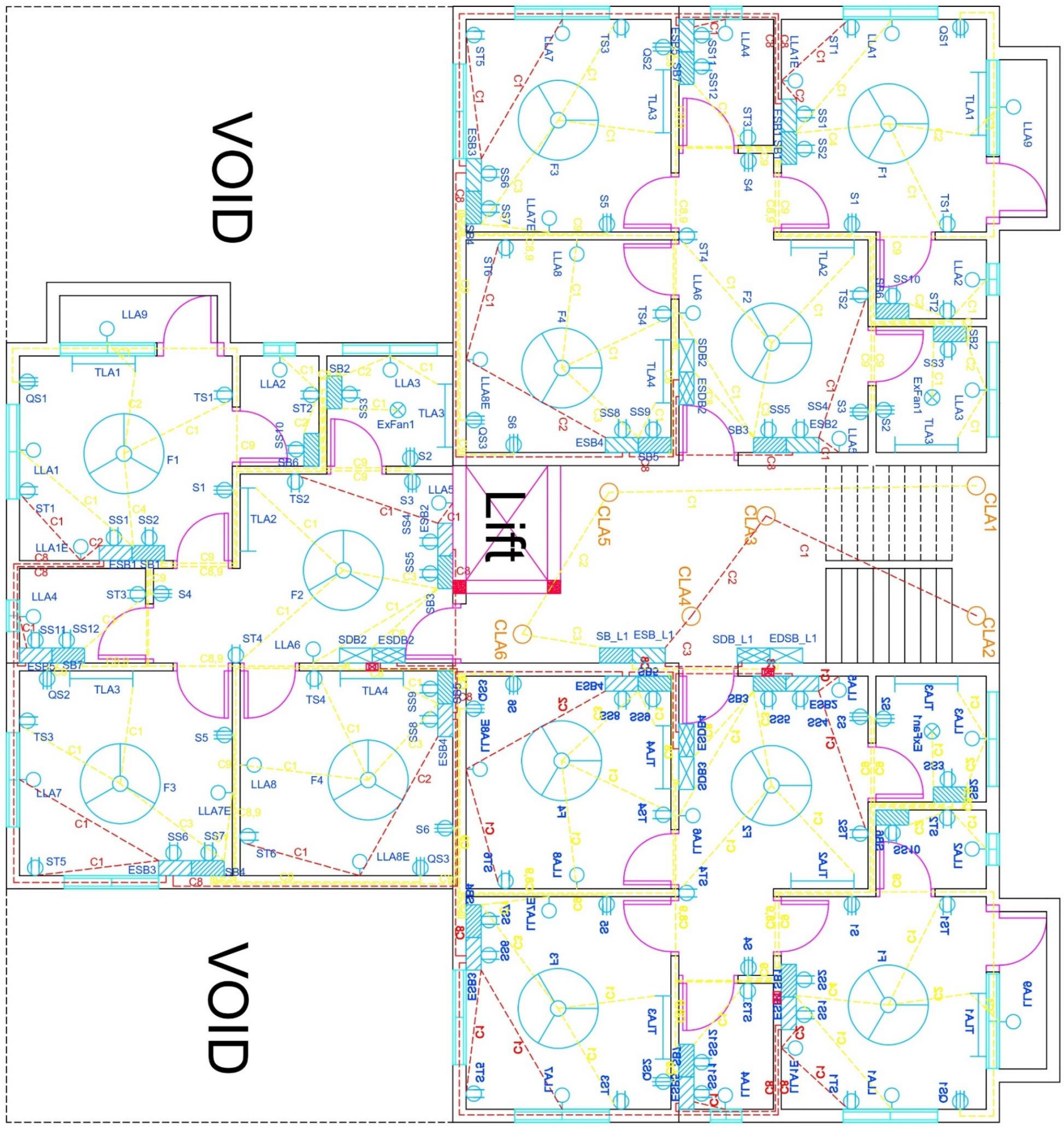

Ground Floor Design

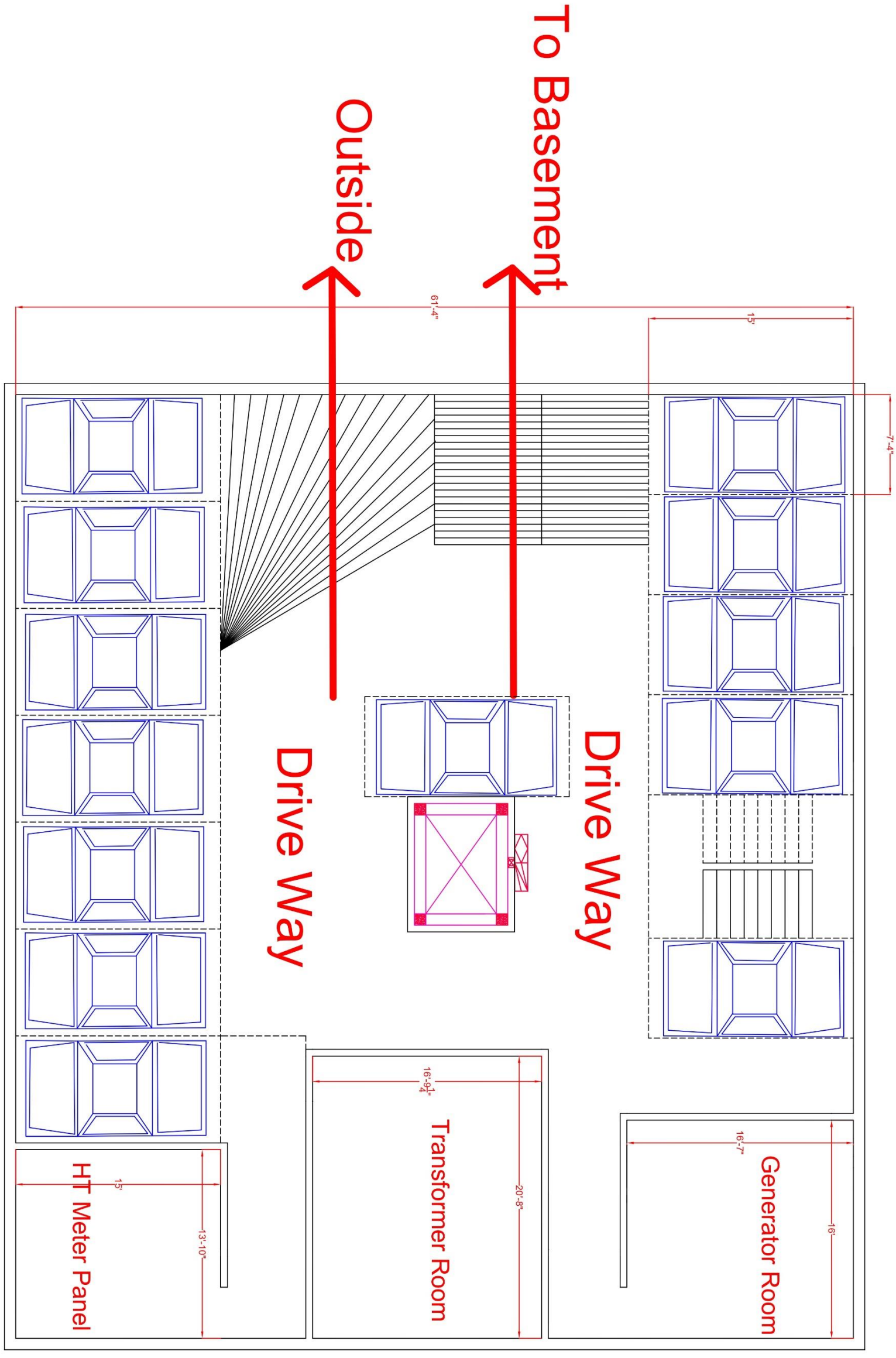

Conduit and Switch Board Calculations for Ground Floor

Ground Floor Main Conduit Calculation:

Basement Drive Way	SB_G1			
Appliances	**Quantity**	**Power per head**	**Power**	**Current Rating**
Filament Light (FL1-5)	5	40	200	1.086956522
		Total-->	200	1.086956522

Basement Driver & Tx room	SB_G2			
Appliances	**Quantity**	**Power per head**	**Power**	**Current Rating**
Filament Light (FL9-11)	3	40	120	0.652173913
Fan (F_G1,3)	2	100	200	1.086956522
Tube Light (TLA_G1)	1	20	20	0.108695652
LED light (LLA_G2,3)	2	12	24	0.130434783
		Total-->	364	1.97826087

Drive-Way & Generator Room	SB_B3			
Appliances	**Quantity**	**Power per head**	**Power**	**Current Rating**
Fan (F_G4)	1	100	100	0.543478261
Tube Light (TLA_G3)	1	20	20	0.108695652
		Total-->	120	0.652173913

HT Meter Panel	SB_B4			
Appliances	**Quantity**	**Power per head**	**Power**	**Current Rating**
Fan (F_G6)	1	100	100	0.543478261
Tube Light (TLA_G5)	1	20	20	0.108695652
		Total-->	120	0.652173913

Ground Floor Emergency Conduit Calculation:

Basement Drive Way	ESB_G1			
Appliances	**Quantity**	**Power per head**	**Power**	**Current Rating**
Filament Light (FL6-8)	3	40	120	0.652173913
CLA (CLA_G1,G2)	2	12	24	0.130434783
		Total-->	144	0.782608696

Basement Drive Way & Tx Room	ESB_G2			
Appliances	**Quantity**	**Power per head**	**Power**	**Current Rating**
Filament Light (FL12)	1	40	40	0.217391304
LED light (LLA_G1)	1	12	12	0.065217391
Tube Light (TLA_G2)	1	20	20	0.108695652
Fan (F_G2)	1	100	100	0.543478261
		Total-->	172	0.934782609

Basement Drive Way & Gen Room	ESB_G3			
Appliances	**Quantity**	**Power per head**	**Power**	**Current Rating**
Filament Light (FL13)	1	40	40	0.217391304
Tube Light (TLA_G4)	1	20	20	0.108695652
Fan (F_G5)	1	100	100	0.543478261
		Total-->	160	0.869565217

HT Meter Room	ESB_G4			
Appliances	**Quantity**	**Power per head**	**Power**	**Current Rating**
LED light (LLA_G5)	1	12	12	0.065217391
Fan (F_G7)	1	100	100	0.543478261
		Total-->	112	0.608695652

SDB calculation for the Ground Floor:

Switch Board	Nos	P Rating	Current Rating	Load
SB_G1	1	200	1.08695652	200
SB_G2	1	364	1.97826087	364
SB_G3	1	120	0.65217391	120
SB_G4	1	120	0.65217391	120
P load	0	3000	13.0434783	0
Q load	0	4000	17.3913043	0

Circuit	Switch Boards	Current Rating	Wire Rating	Breaker
ckt1	SB_G1	1.086956522	2x1.5 BYM + 1.5 BYA ECC	5A SP MCB
ckt2	SB_G2, SB_G3, SB_G4	3.282608696	2x1.5 BYM + 1.5 BYA ECC	5A SP MCB

Total SB Load -->	**804**
Total P Load -->	**0**
Total Q Load -->	**0**
Total Load -->	**562.8**
Current Rating -->	**3.058695652**

ESDB calculation for the Ground Floor:

Switch Board	Nos	P Rating	Current Rating	Load
ESB_G1	1	144	0.7826087	144
ESB_G2	1	172	0.93478261	172
ESB_G3	1	160	0.86956522	160
ESB_G4	1	112	0.93478261	112
P load	0	3000	17.0454545	0

Circuit	Switch Boards	Current Rating	Wire Rating	Breaker
ckt1	ESB_G1, ESB_G2, ESB_G3, ESB_G4	3.195652174	2x1.5 BYM + 1.5 BYA ECC	5A SP MCB

Total SB Load -->	**588**
Total P Load -->	**0**
Total Q Load -->	**0**
Total Load -->	**411.6**
Current Rating -->	**2.236956522**

Ground Floor Main Conduit

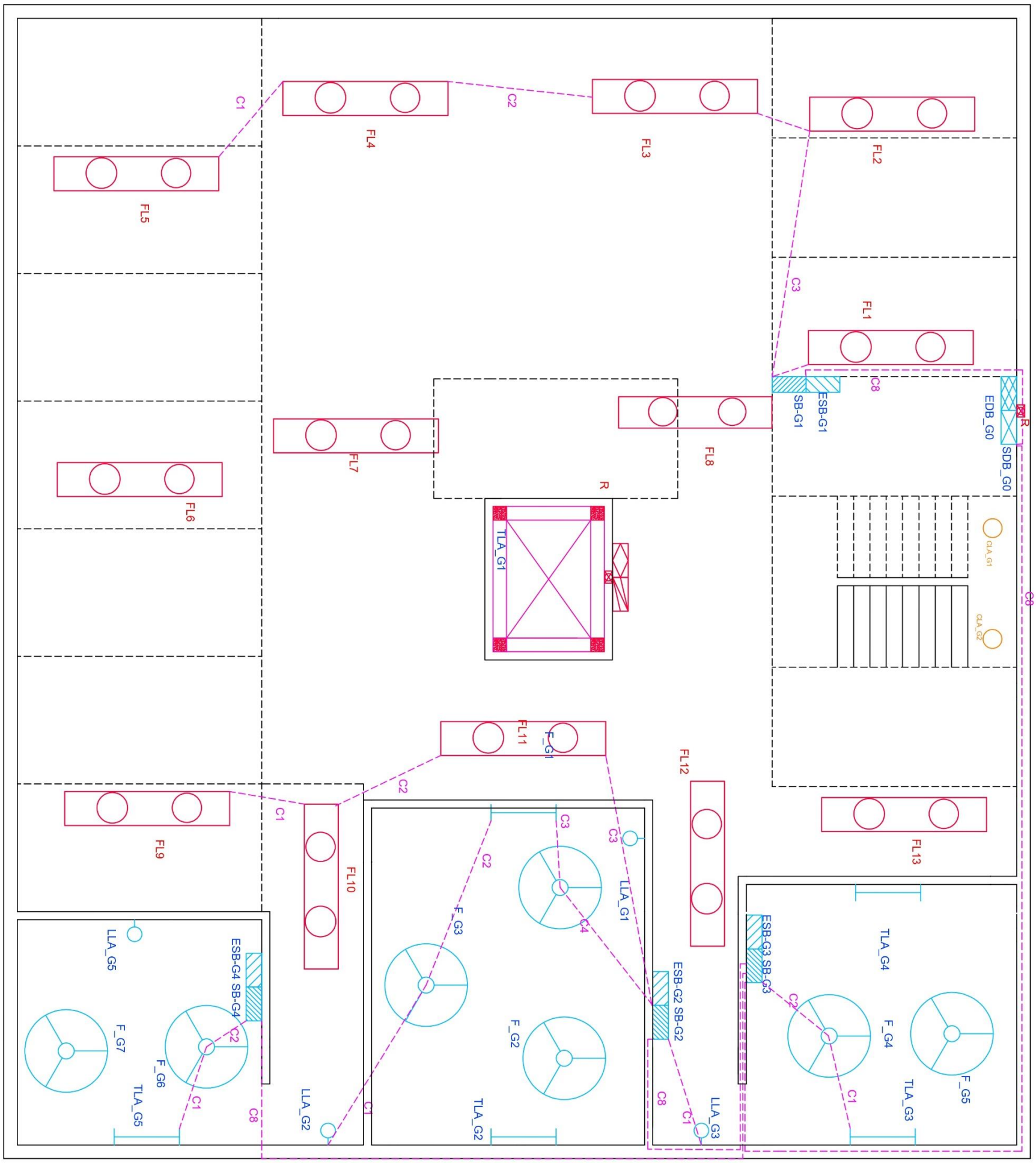

Ground Floor Emergency Conduit

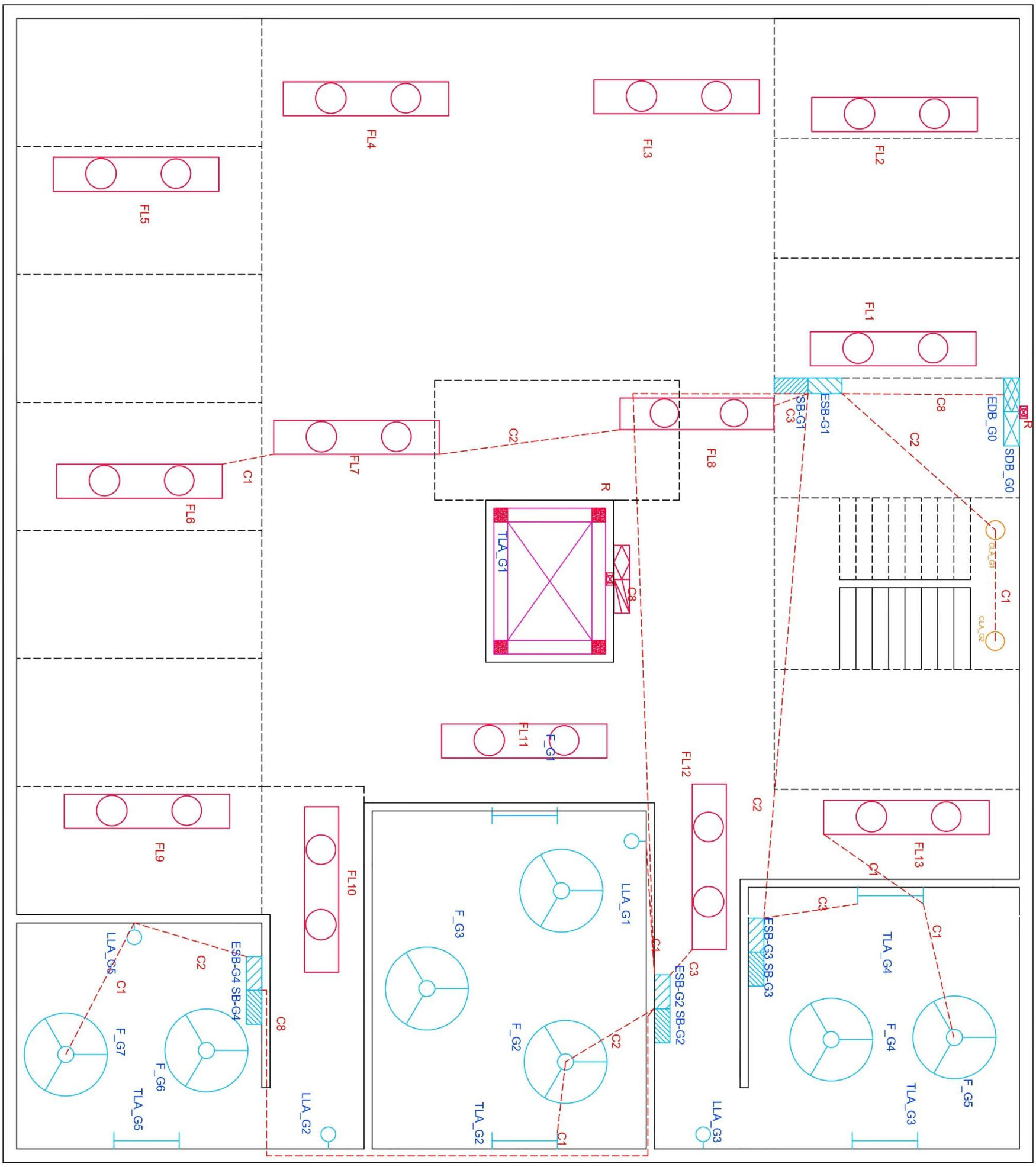

Basement Design

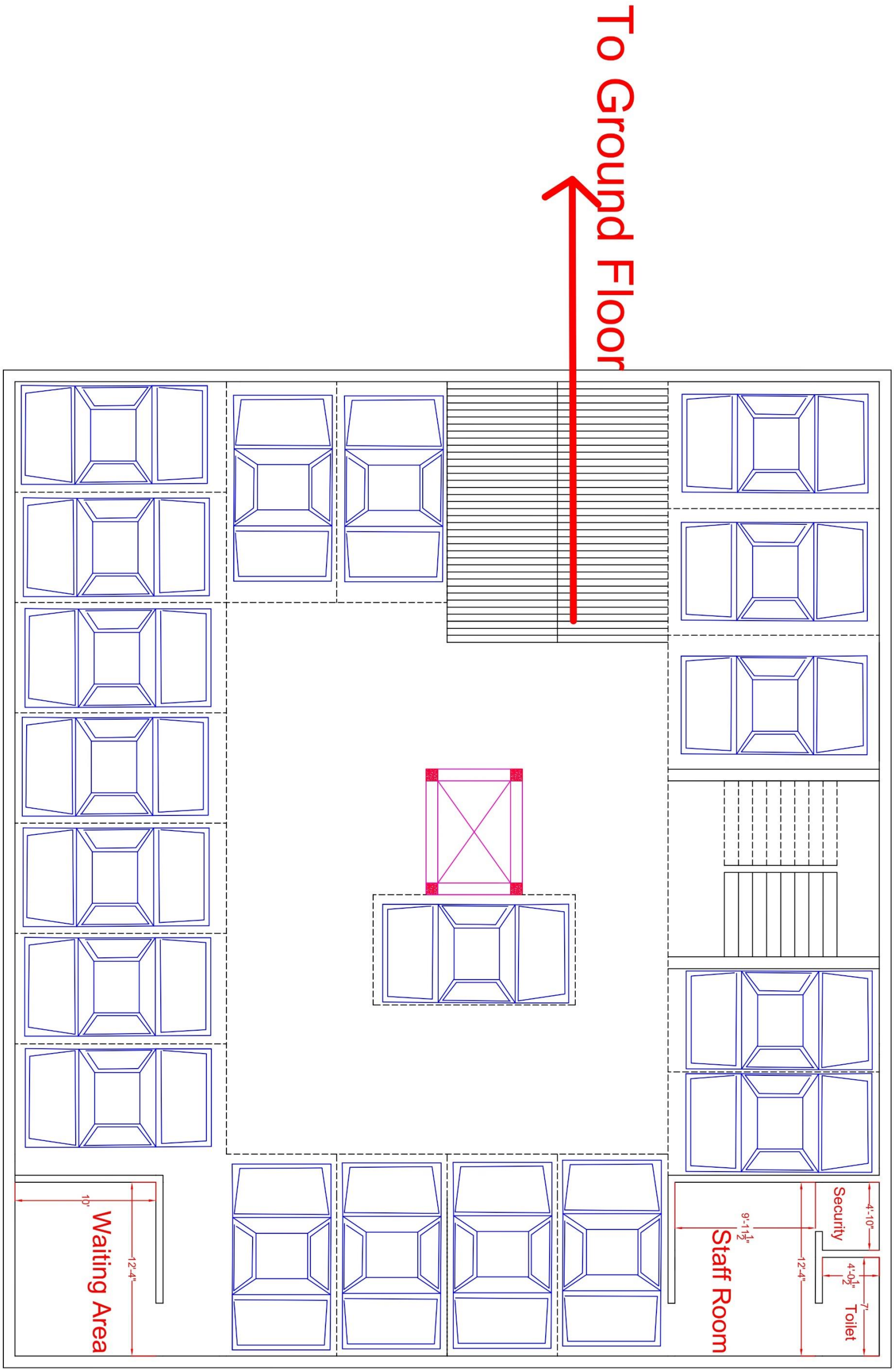

Conduit and Switch Board Calculations for Basement

Basement Main Conduit Calculation:

Basement Drive Way	SB_B1			
Appliances	**Quantity**	**Power per head**	**Power**	**Current Rating**
Fillament Light (FL1-9)	9	40	360	1.956521739
CLA (CLA1,2)	2	12	24	0.130434783
		Total-->	384	2.086956522

Staff Room and Toilet	SB_B2			
Appliances	**Quantity**	**Power per head**	**Power**	**Current Rating**
Fan (F_B1)	1	100	100	0.543478261
LED light (LLA_B1)	1	12	12	0.065217391
Tube Light (TLA_B1)	1	20	20	0.108695652
		Total-->	20	0.108695652

Waiting Room	SB_B3			
Appliances	**Quantity**	**Power per head**	**Power**	**Current Rating**
Fan (F_B3)	1	100	100	0.543478261
Tube Light (TLA_B2)	1	20	20	0.108695652
		Total-->	100	0.543478261

Basement Emergency Conduit Calculation:

Basement Drive Way	ESB_B1			
Appliances	**Quantity**	**Power per head**	**Power**	**Current Rating**
Fillament Light (FL10-16)	7	40	280	1.52173913
		Total-->	280	1.52173913

Security Room	ESB_B2			
Appliances	**Quantity**	**Power per head**	**Power**	**Current Rating**
LED light (LLA_B2)	1	12	12	0.065217391
		Total-->	12	0.065217391

SDB calculation for Basement:

Switch Board	Nos	P Rating	Current Rating	Load
SB_B1	1	384	2.08695652	384
SB_B2	1	20	0.10869565	20
SB_B3	1	100	0.54347826	100
P load	0	3000	13.0434783	0
Q load	0	4000	17.3913043	0

Circuit	Switch Boards	Current Rating	Wire Rating	Breaker
ckt1	SB_B1	1.52173913	2x1.5 BYM + 1.5 BYA ECC	5A SP MCB
ckt2	SB_B2, SB_B3	0.652173913	2x1.5 BYM + 1.5 BYA ECC	5A SP MCB

Total SB Load -->	**504**
Total P Load -->	**0**
Total Q Load -->	**0**
Total Load -->	**352.8**
Current Rating -->	**1.917391304**

ESDB calculation for Basement:

Switch Board	Nos	P Rating	Current Rating	Load
ESB1	1	280	1.52173913	280
ESB3	1	12	0.06521739	12
P load	0	3000	13.0434783	0

Circuit	Switch Boards	Current Rating	Wire Rating	Breaker
ckt1	ESB_B1	1.52173913	2x1.5 BYM + 1.5 ECC BYA	5A SP MCB
ckt2	ESB_B2	0.065217391	2x1.5 BYM + 1.5 ECC BYA	5A SP MCB

Total SB Load -->	**292**
Total P Load -->	**0**
Total Q Load -->	**0**
Total Load -->	**204.4**
Current Rating -->	**1.110869565**

Basement Main Conduit

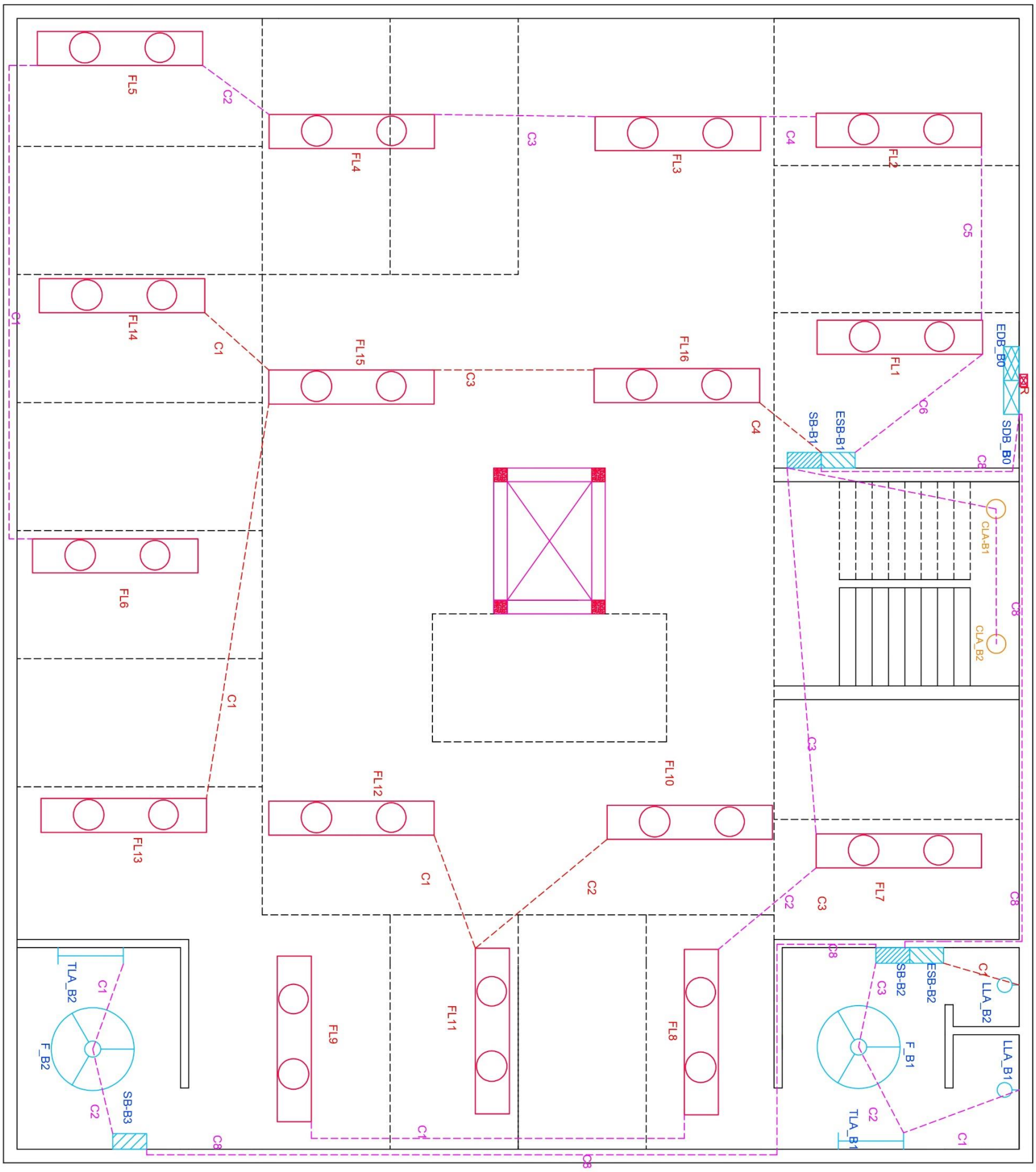

Basement Emergency Conduit

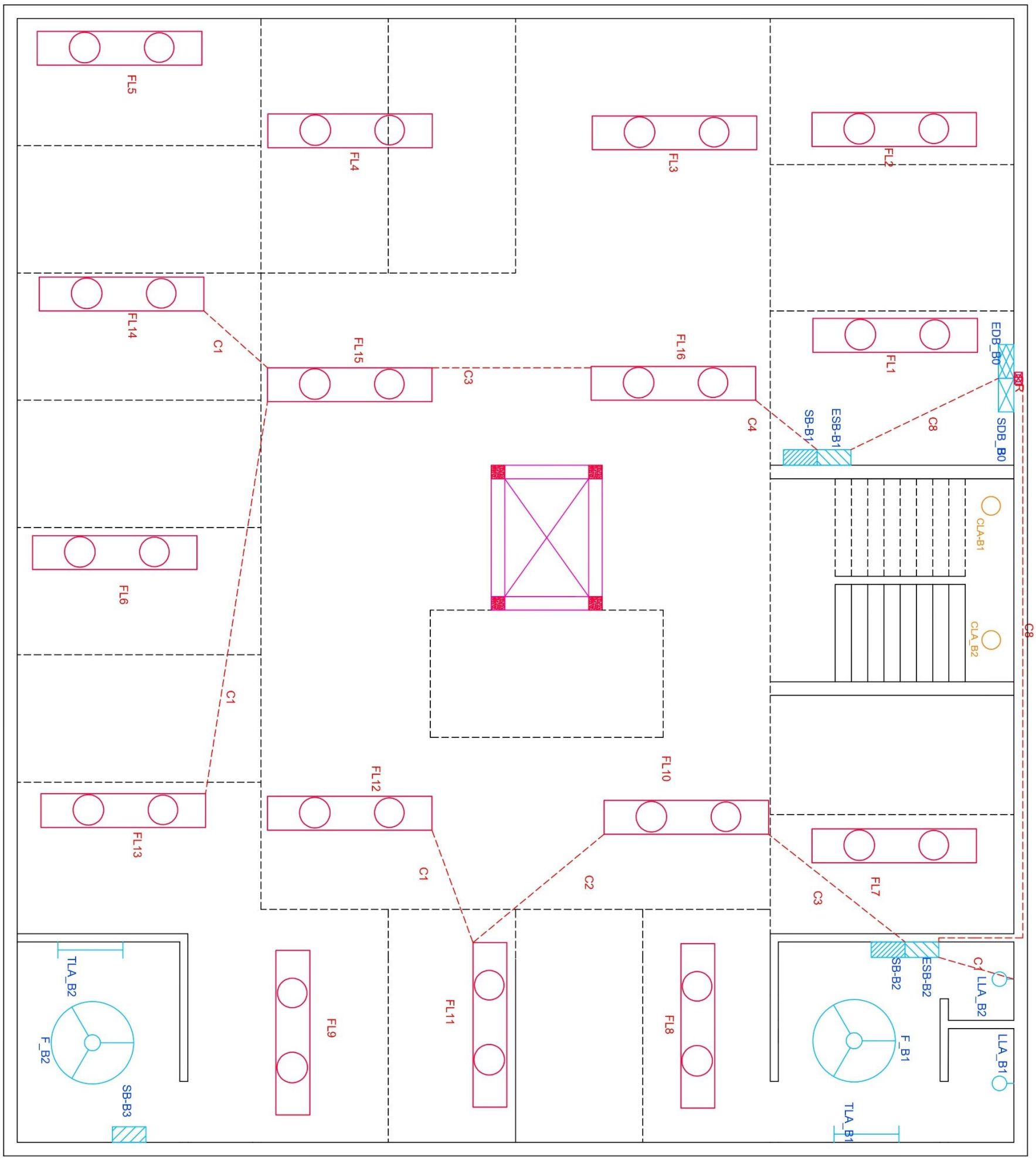

Main Floor Switch Board

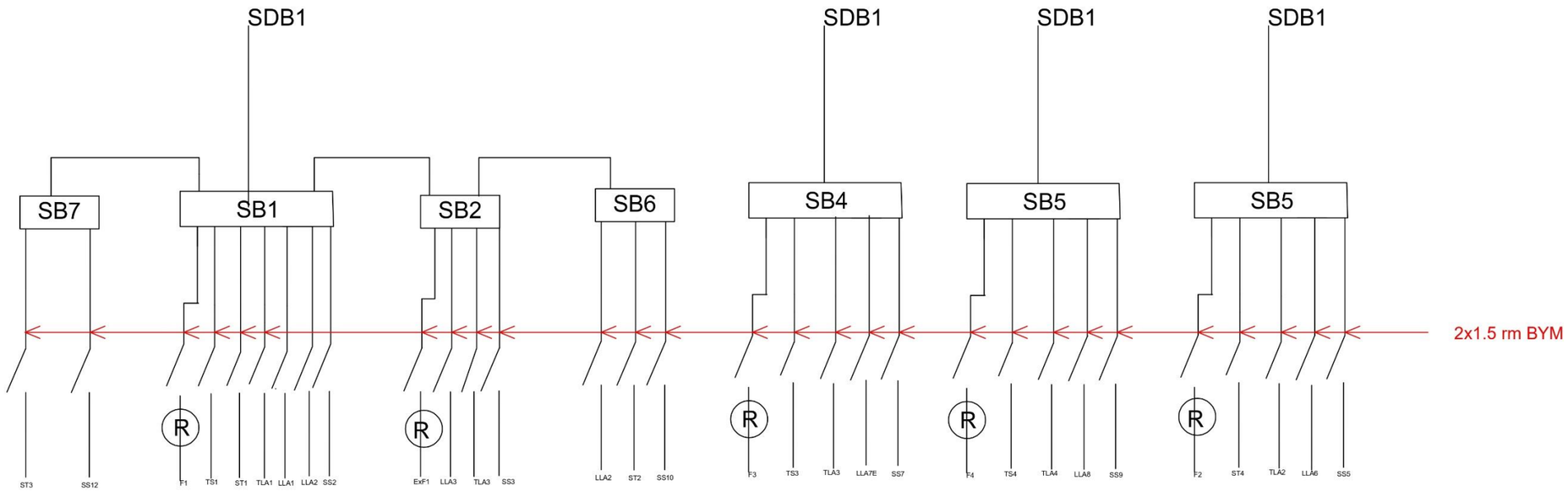

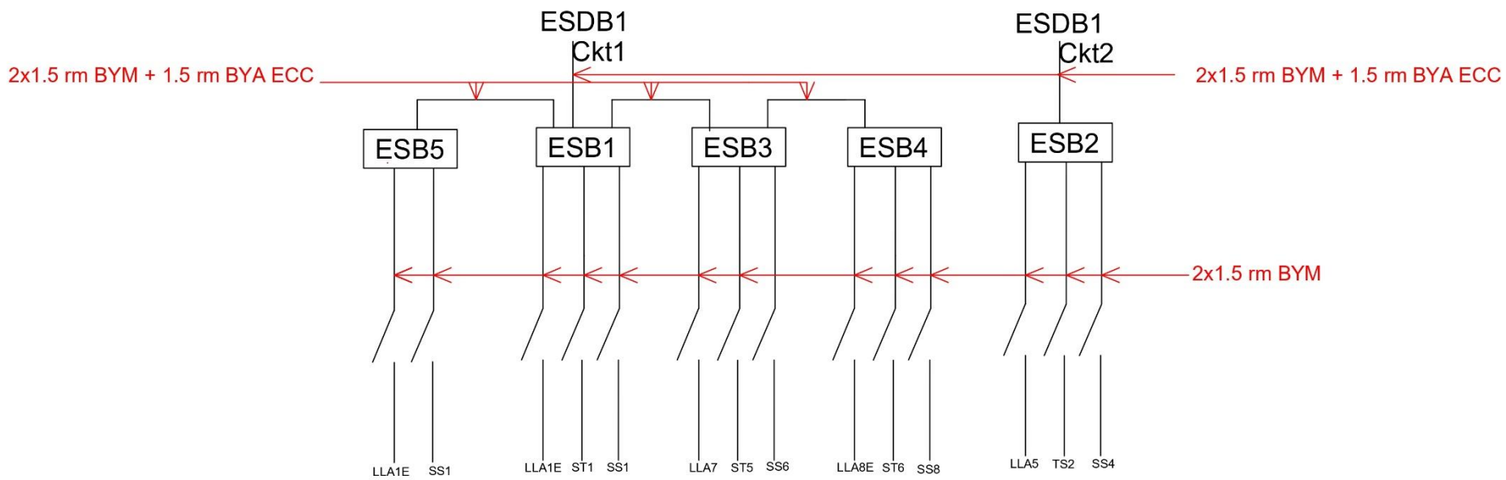

Ground Floor Switch Board

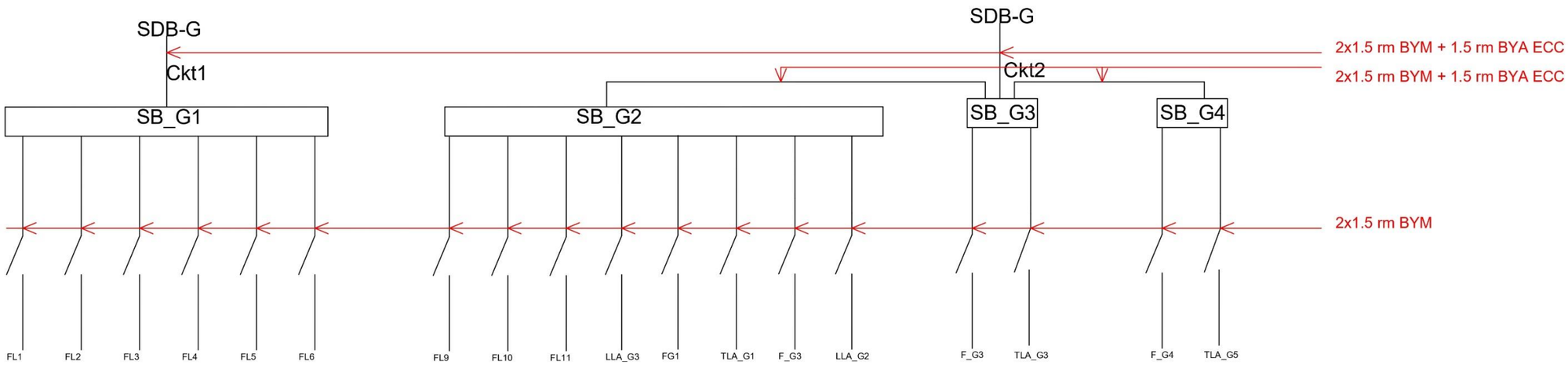

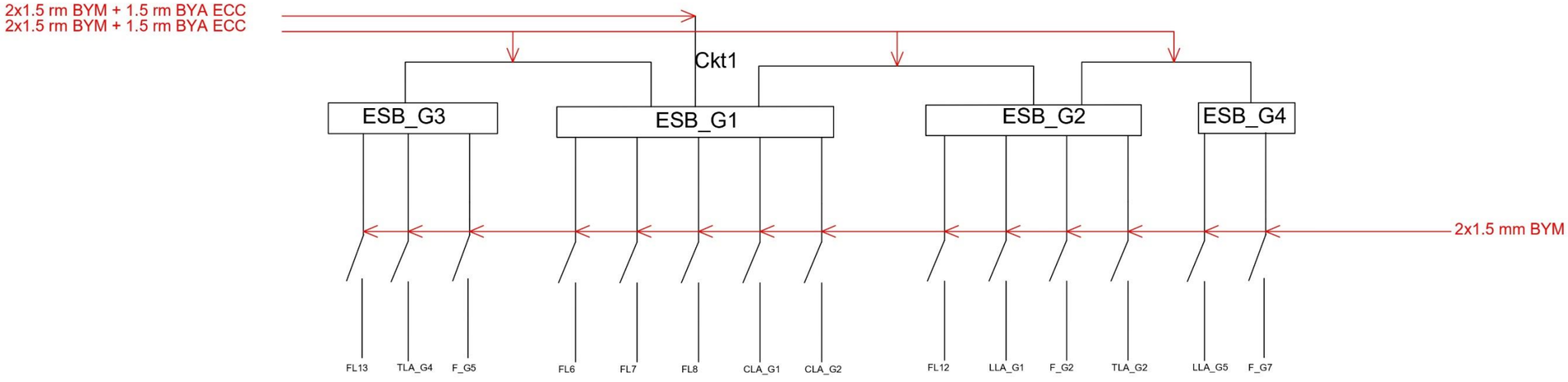

Main Floor SDB Diagram

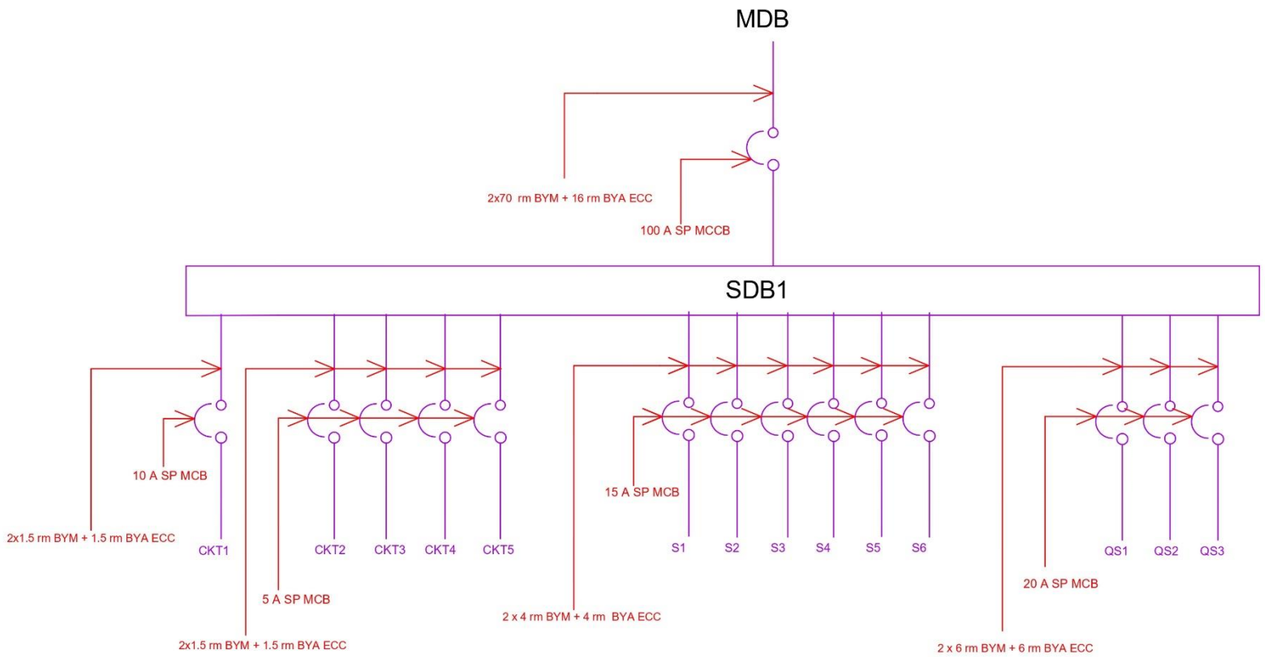

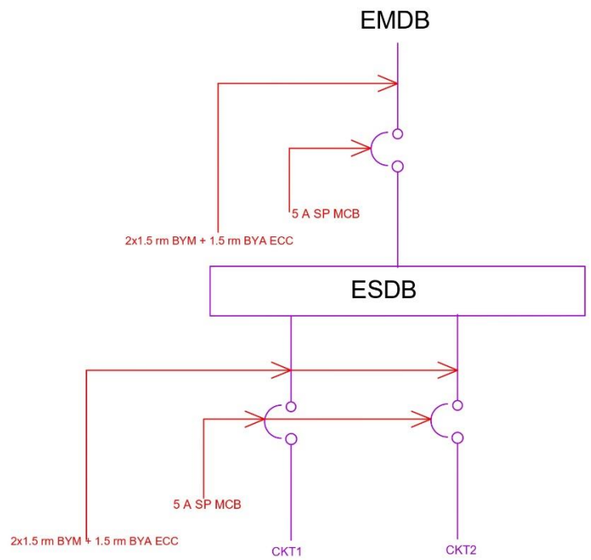

Ground Floor and Basement SDB Diagram

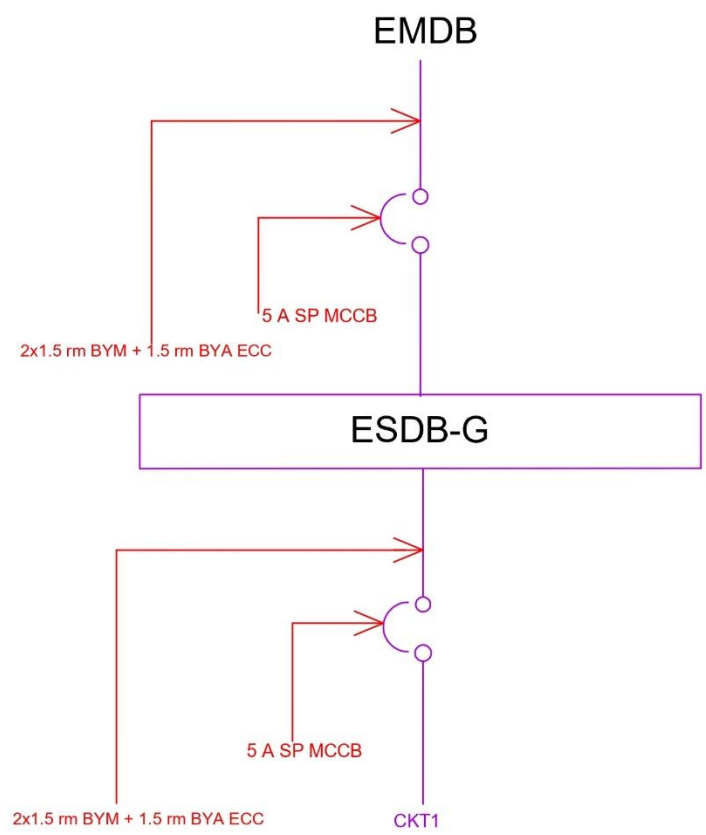

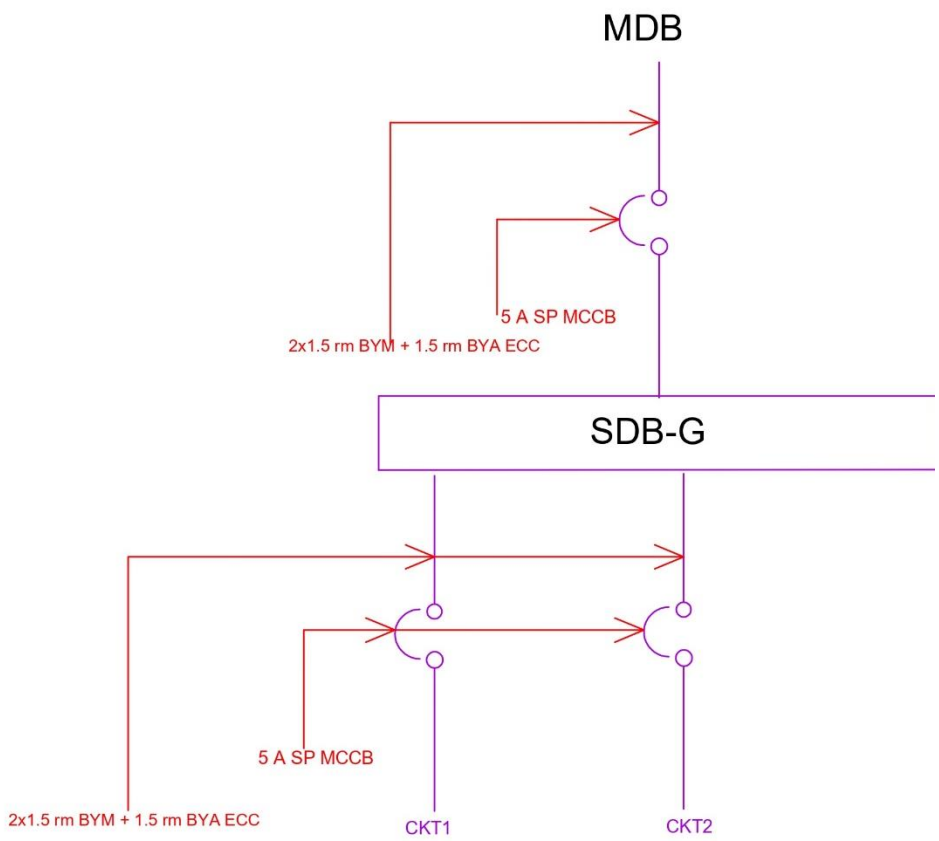

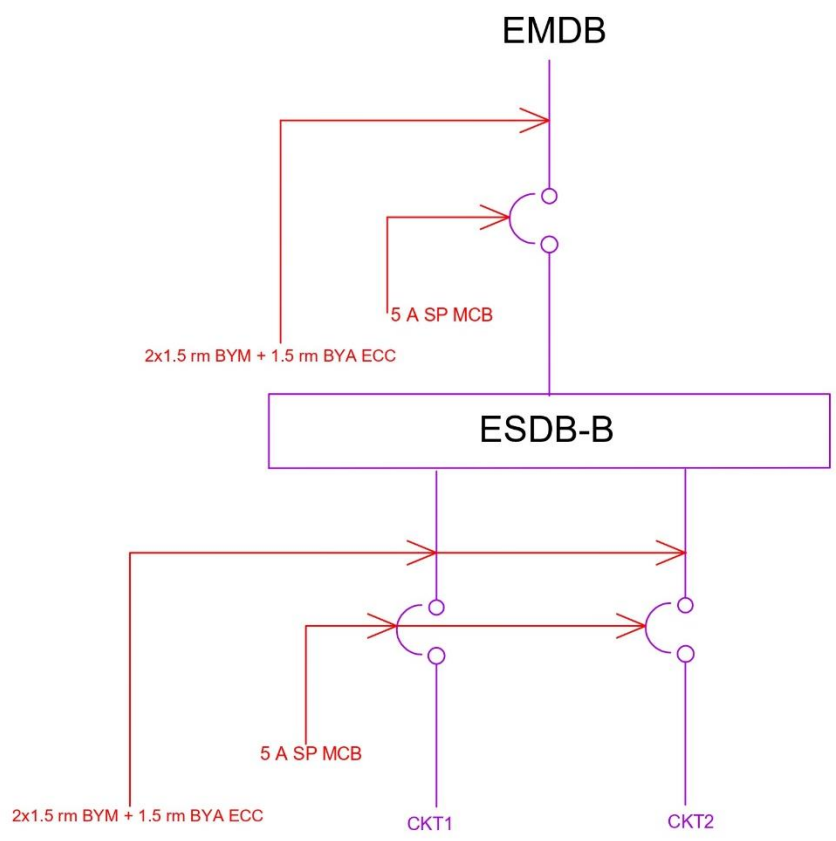

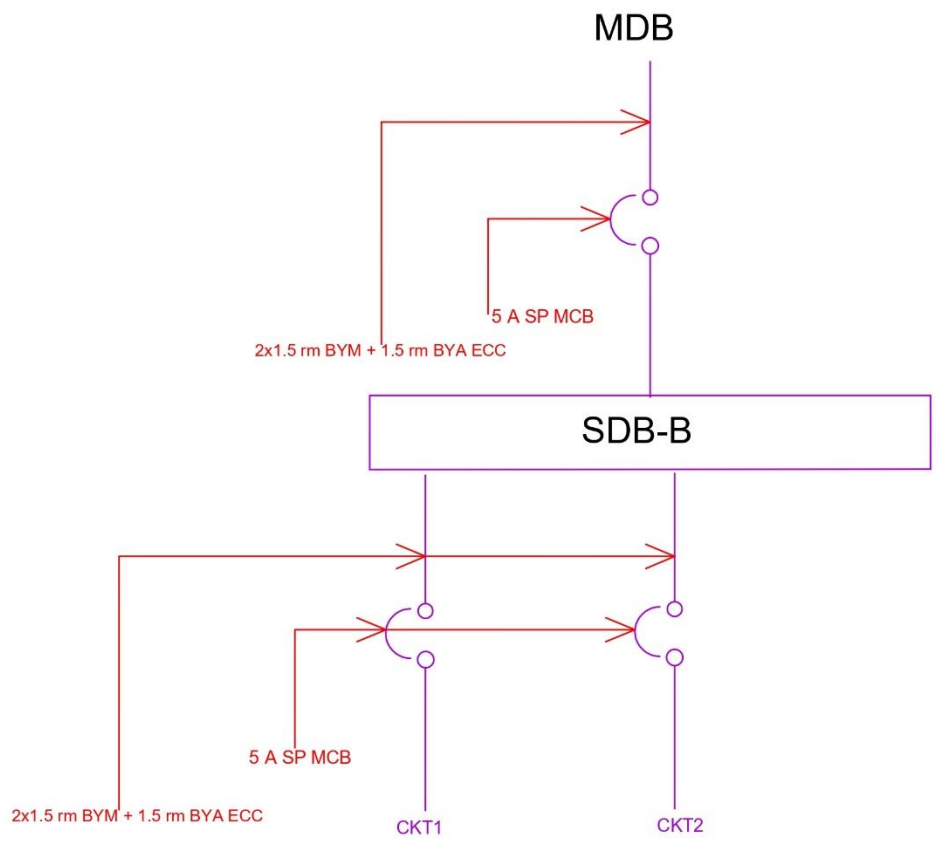

Lobby and Rooftop SDB Diagram

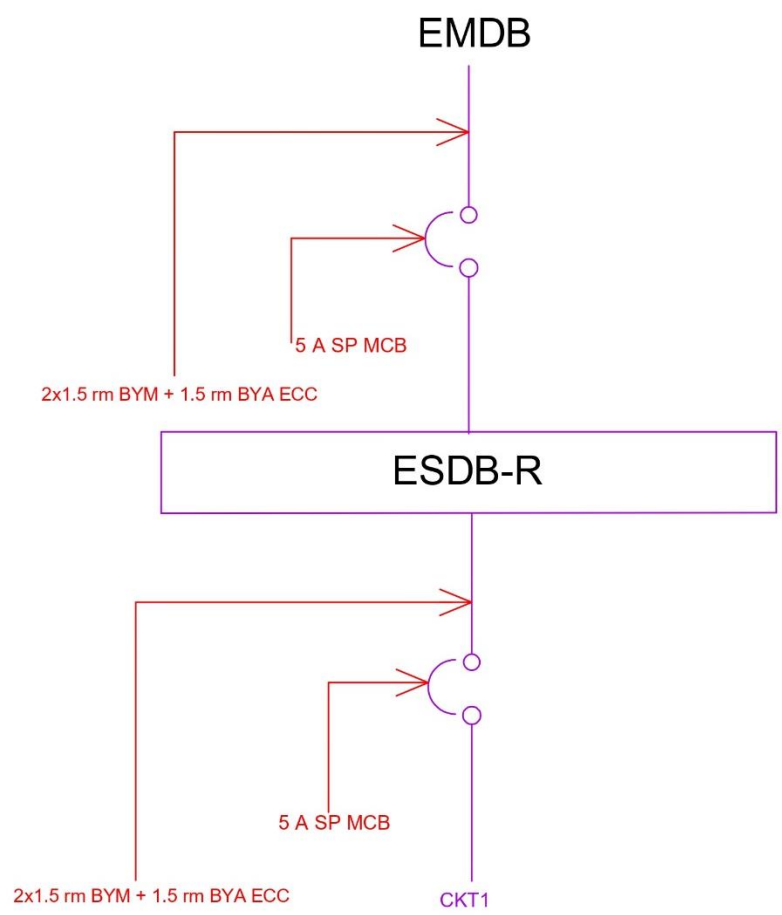

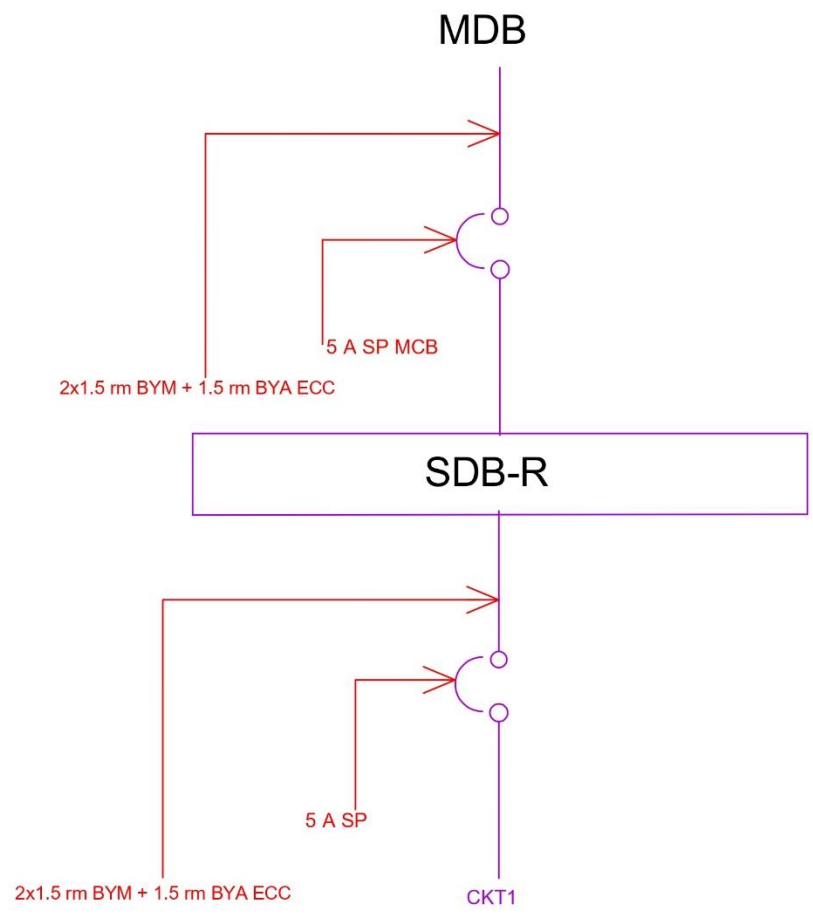

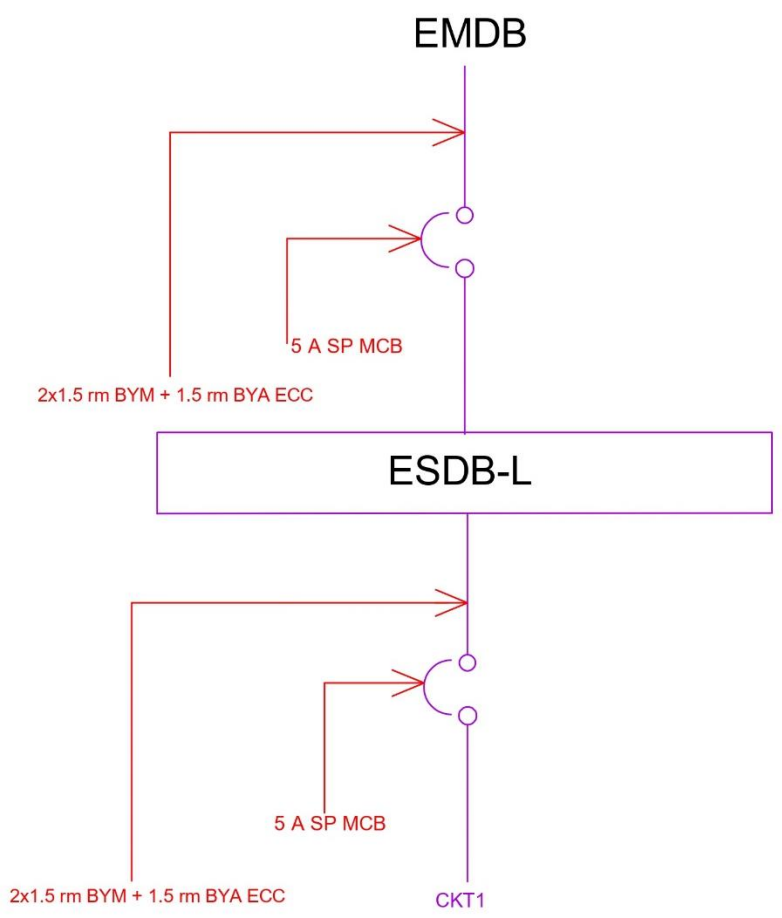

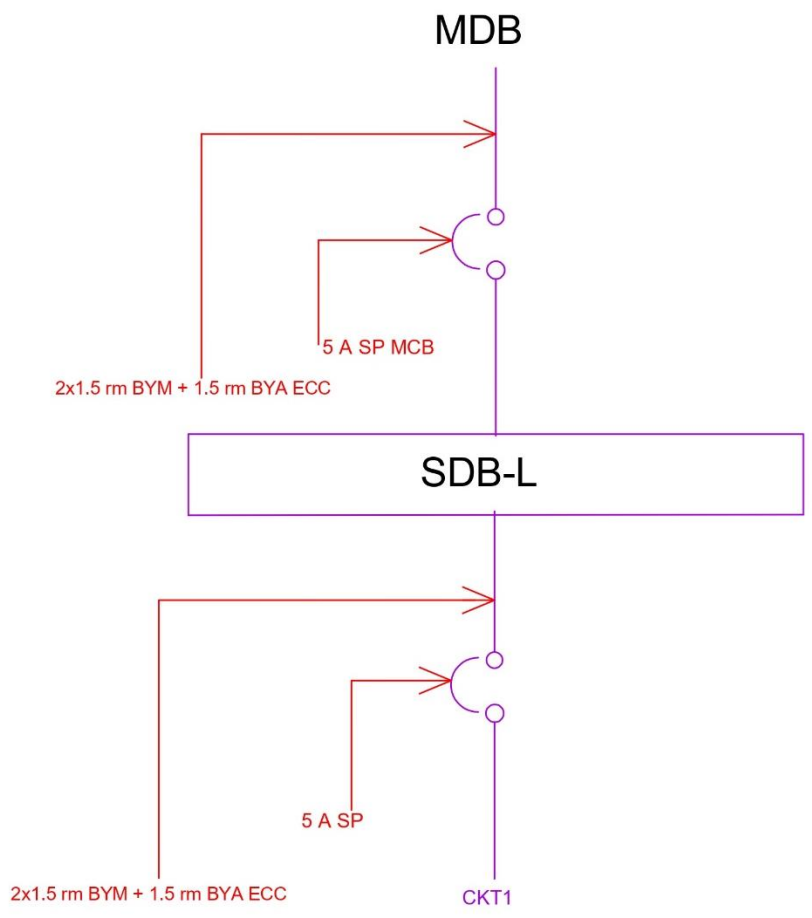

Pump Calculation

We choose a 5 kW pump for our purpose.

Current rated, I $= \frac{\mathrm{P}}{3*V*pf} = \frac{5000}{3*230*0.8} = 9.47\ A$

Wire Rating: 4 x 4 rm NYY + 4 rm BYA ECC

Breaker Rating: 15 A TP MCB

As per suggestions in class we chose a thicker wire since a 10 A rated wire might work however the likelihood of accident is significantly higher since rated current of generator and wire is very close and those who stay in the apartment might draw significantly higher current.

Lift Calculation

Table 8.4.9: Car Speed for Lift in Different Kinds of Usage

Building Type	Rise (m)	Minimum Car Speed (m/s)	Building Type	Rise (m)	Minimum Car Speed (m/s)
Office Building	0 to 40	2.0	Hospital (contd.)	31 to 40	1.6
	41 to 70	2.5		41 to 55	2.0
	71 to 85	3.6		56 to 75	2.5
	86 to 115	4.0		Above 75	3.6
	Above 115	5.0	Apartments	0 to 25	0.63
Hotels	0 to 40	2.0		26 to 40	1.0
	41 to 70	2.5		41 to 60	1.6
	71 to 85	3.6		Above 60	2.0
	86 to 115	4.0	Stores	0 to 30	1.0
	Above 115	5.0		31 to 45	1.6
Hospital	0 to 20	0.63		46 to 60	2.0
	21 to 30	1.0		Above 60	2.5

Annexure-8

Table 8.1

Hoistway & Power Configurations for Passenger Lift According to Various Speed and Capacity

Persons	Rated Capacity (Kg) & maxm area(m2) as per EN 81	Rated Speed (m/s)	Net size of Car (Width x Depth) (mm)	Net size of Door (Width x Height) (mm)	Hoistway Size (Width x Depth) (mm)	Hoistway Size Overhead Height (mm)	Hoistway Size Pit Head (mm)	Motor Capacity (KW)	Machine Room Dimension (mm)	Maximum Current & |Running current| (Amp)
8	630 (1.66)	1.0	1200x1400	800x2100	1800x1900	4500	1500	4.0	1900x3700	14.8/9.2
		1.5/1.6				4600	1600	6.4		23.7/13.8
		2.0				4850	1800	8.3		30.9/17.1
		2.5				5100	1900	12.3		48.2/28.4
		3.0				5250	2100	14.1		57.3/32.8
		3.5				5400	2200	18.3		71/39
		4.0				5500	2300	24.0		96/52
10	800 (2.00)	1.0	1350x1450	900x2100	2000x2000	4500	1500	5.0	2100x3800	15.7/10.4
		1.5/1.6				4600	1600	8.1		25.8/16.2
		2.0				4850	1800	10.5		34.3/20.5
		2.5				5100	1900	15.0		55.7/34.4
		3.0				5250	2100	17.1		65.8/39.5
		3.5				5400	2200	22.7		86.4/46.3
		4.0				5500	2300	29.5		115.2/63

Standard 11 floor buildings have a height around 45 m. For our apartment, our car speed should be 1.6 m/s

Our lift area is 3.47 sq.m. Individual lift has 1.74 sq.m area.

Lift choice: 8.1 kW motor capacity, 10 person (800 kg) lift.
Unit: 2

Current rated, I $= \frac{\mathrm{P}}{3*V*pf} = \frac{8100}{3*230*0.8} = 14.67\ A$

Wire Rating: 4 x 6 rm NYY + 6 rm BYA ECC

Breaker Rating: 20 A TP MCB

As per suggestions in class we chose a thicker wire since a 15 A rated wire might work however the likelihood of accident is significantly higher since rated current of generator and wire is very close and those who stay in the apartment might draw significantly higher current.

AVR Calculation

We choose a 8.1 kW lift for our purpose.

Rated kVA $= \frac{P}{pf} = \frac{8.1}{0.8} = 10.125$ kVA

AVR choice: 15 kVA AVR

8.6 AVR

Supply, installation, testing & commissioning of following 415V, 3-phase, 50Hz electronically controlled, automatic voltage stabilizer/regulator locally assembled in metallic painted cabinet suitable for input voltage range 300 - 460V, output stepless continuous voltage 400V ± 3%, correction speed 20V/sec. (minimum) complete with phase failure and spike & surge-fluctuation voltage protection, auto shut off at high & low voltage with auto reset system, overload & instantaneous short circuit protection by MCCB & relay, transient suppression circuit, ON-OFF-TRIP indicators, voltmeter & ammeter, bypass circuit etc.

Assembled by AEG/ MICRO/ NAVANA/ RAHIMAFROOZ / GREEN POWER/ GIGA POWER/ JUST POWER or equivalent accepted/approved by the Engineer.

8.6.1	10 KVA AVR	Each	Tk.	84,850.00	Tk.	84,850.00	Tk.	84,850.00	Tk.	84,850.00
8.6.2	15 KVA AVR	Each	Tk.	93,103.00	Tk.	93,103.00	Tk.	93,103.00	Tk.	93,103.00

EMDB Calculation

The following equations used to calculate EMDB:

Power Rating for an EMDB = 0.7*Total ESDB Rating + 0.7*Total Lift Load

Current Rating for an EMDB = Power Rating of an EMDB / 3*V*pf

ESDB	Load (W)	Unit	Total Load (W)
Floor Unit	672	33	22176
Basement	204.4	1	204.4
Ground Floor	411.6	1	411.6
Lobby	25.2	11	277.2

EMDB Component	Load (W)	Unit	Total Load (W)
Total ESDB Load			23069.2
Lift Load	8100	2	16200
Total EMDB Load			27488.44

EMDB Current: 49.79789855 A

Wire Rating: 4 x 35 rm NYY + 16 rm BYA ECC

Breaker Rating: 60 A TP MCCB

Generator Calculation

Power Rating = Total EMDB Load = 27.488 kW

We use a 48 kW rated generator as table 8.1.24.

Table 8.1.24: Recommended Area for Standby Generator Room

Capacity (kW)	Area (m^2)
1 × 25	20
1 × 48	24
1 × 100	30
1 × 150	36
1 × 300	48
1 × 500	56

Rated kVA $= \frac{P}{pf} = \frac{48}{0.8} = 60$ kVA

As per **PWD Soll For E/M Works 2.2.2.1.5**, 60 kVA rated supply of 400V-415V, 3-phase, 4-wire, 50 Hz. air / water cooled, floor mounted, indoor type following continuous capacity (prime power) electric generating set with ATS without canopy suitable for tropicalized country.

MDB Calculation

The following equations used to calculate EMDB:

Power Rating for an MDB = 0.7*Total SDB Rating + 0.7*(Pump Load + Total EMDB Rating)

Current Rating for an MDB = Power Rating of an MDB / 3*V*pf

ESDB	Load`(W)	Unit	Total Load (W)
Floor Unit	13678	33	451374
Basement	352.8	1	352.8
Ground Floor	526.8	1	526.8
Lobby	25.2	11	277.2
Roof	16.8	1	16.8

EMDB Component	Total Load (W)
Total SDB Load	452547.6
EMDB Load	27488.44
Pump Load	5000
Total MDB Load	339525.228

MDB Current: 615.0819348 A

Wire Rating: 4 x 500 rm NYY + 250 rm BYA ECC

Breaker Rating: 685 A TP MCCB

Transformer Calculation

Total MDB Current, $I = 615$ A

MDB kVA $= 3 \times V \times I = 3 \times 220 \times 615 = 405.954$ kVA

Transformer overload/safety factor: 0.9

Transformer kVA $= \frac{\textbf{MDB kVA}}{\textbf{overload factor}} = 451$ kVA

The transformer of choice is a 500 kVA Transformer, oil-immersed, natural air cooled' 3-phase, 50-Hz, 11 KV/0.415 KV transformer

2.1.4 OIL TYPE TRANSFORMER

Supply of following oil-immersed, natural air cooled, 3-phase, 50-Hz, 11KV/0.415 KV & 0.24 KV indoor/outdoor type distribution transformer of DYN11 vector group complete with two windings of high conductivity copper having basic impulse insulation level 75 KV, dielectric strength 28 KV (for 1 min), HT & LV porcelain bushings, manual 5 position (0, ±2.5%, ±5%) standard tap changer, conservator, thermometer, oil inlet & outlet valves, oil level indicator, dehydrating breather, lifting lugs, earthing terminals, wheel, rating and diagram nameplate etc. including painting, suitable for operation at 40°C ambient temperature with maximum temperature rise 60°C, locally manufactured and tested as per NEMA / VDE / IEC / BS standards along with BDS IEC 60076,PART 1 : 2016 as per accepted/approved by the Engineer-in-charge.

2.1.4.8 (a) Capacity : **500 KVA**
(b) No load loss : 1000 watts (maximum)
(c) Full load loss : 5800 watts (maximum)
(d) Percentage impedance : 4% @ ±10% at 75°C

PFI Plant Calculation

We chose a 50 kVA capacity transformer. A PFI plant should have the capacity to supply at least 60% of the transformer capacity for any form of power factor correction

PFI plant Rated kVA $= 0.6 \times 50 = 30$ kVA

Rated Current: 434.78 A

Wire Rating: 4 x 400 rm NYY + 185 rm BYA ECC

Breaker Rating: 585 A TP MCCB

As current rating is very high, it is very difficult to exceed this. So, we can choose a 200 A rated wire without any issue.

Earth Conductor selection

The earth electrode will penetrate into moist soil (which will remain moist even during the dry season) preferably below ground water table. The resistance of an earthing system after measured after the installation of earth electrodes shall be around 1 ohm.

3 types of earth conductor is used:

- Copper Rod Electrode
- Copper Plate Electrode
- Galvanized Iron pipe

The earth electrode of choice is copper plate electrode. The reasons is as follows:

- Cheap
- Good for saline soil (best for countries like Bangladesh)
- Current is spread out easily (for a 11 storied building, current is very high)

Size: 600 mm x 600 mm x 6 mm minimum

The copper plate shall be buried at least 2 m below the ground level. Multiple Copper plate earth electrodes may have to be installed to achieve an acceptable value of earthing resistance of around 1 ohm. For installing a 600 mm x 600 mm x 6 mm Copper plate 2 m below the ground level earth excavation will have to be done. The earth lead wire shall come via an earthing pit.

Ground Floor Substation Layout

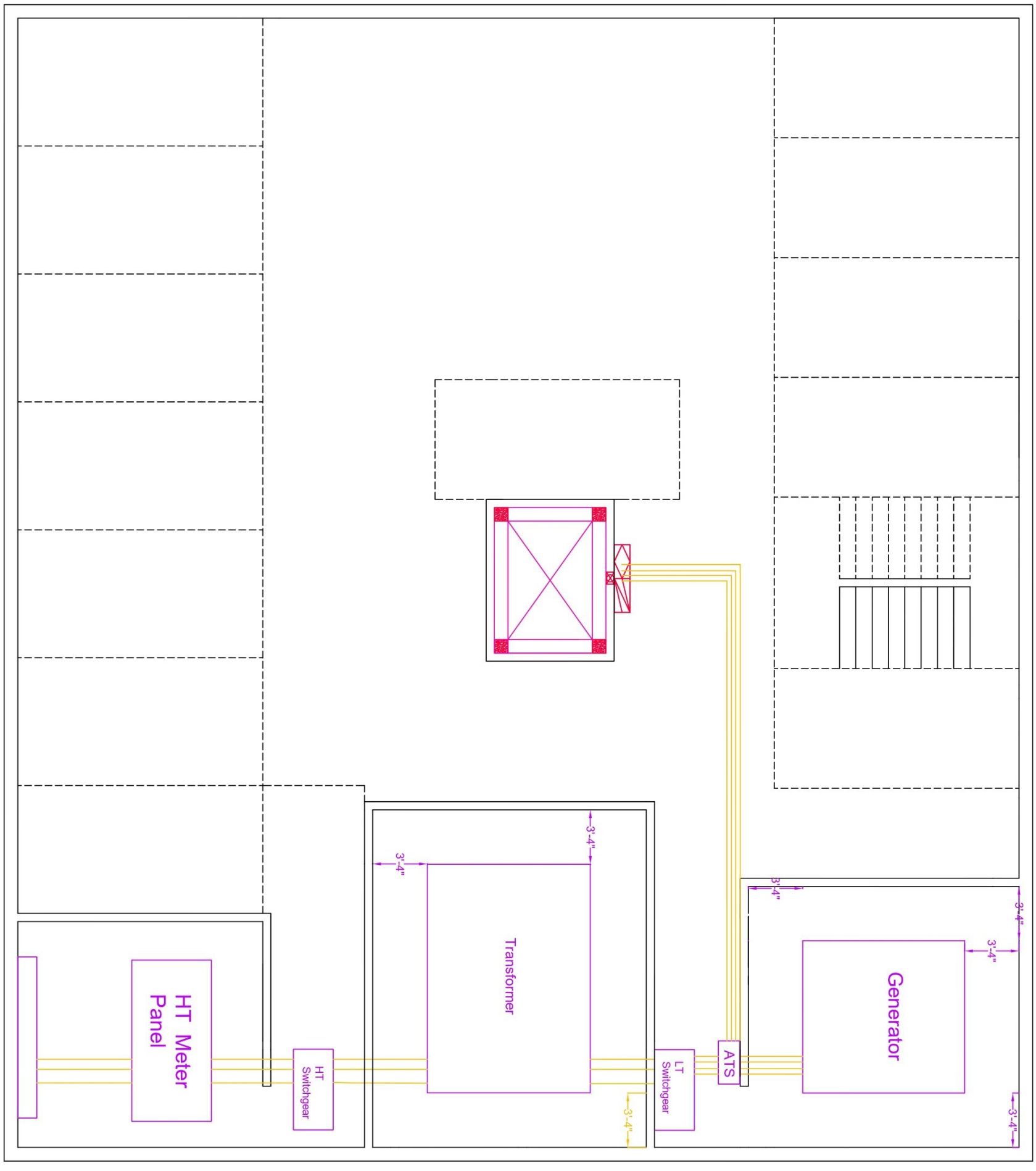

Earth Conductor Design

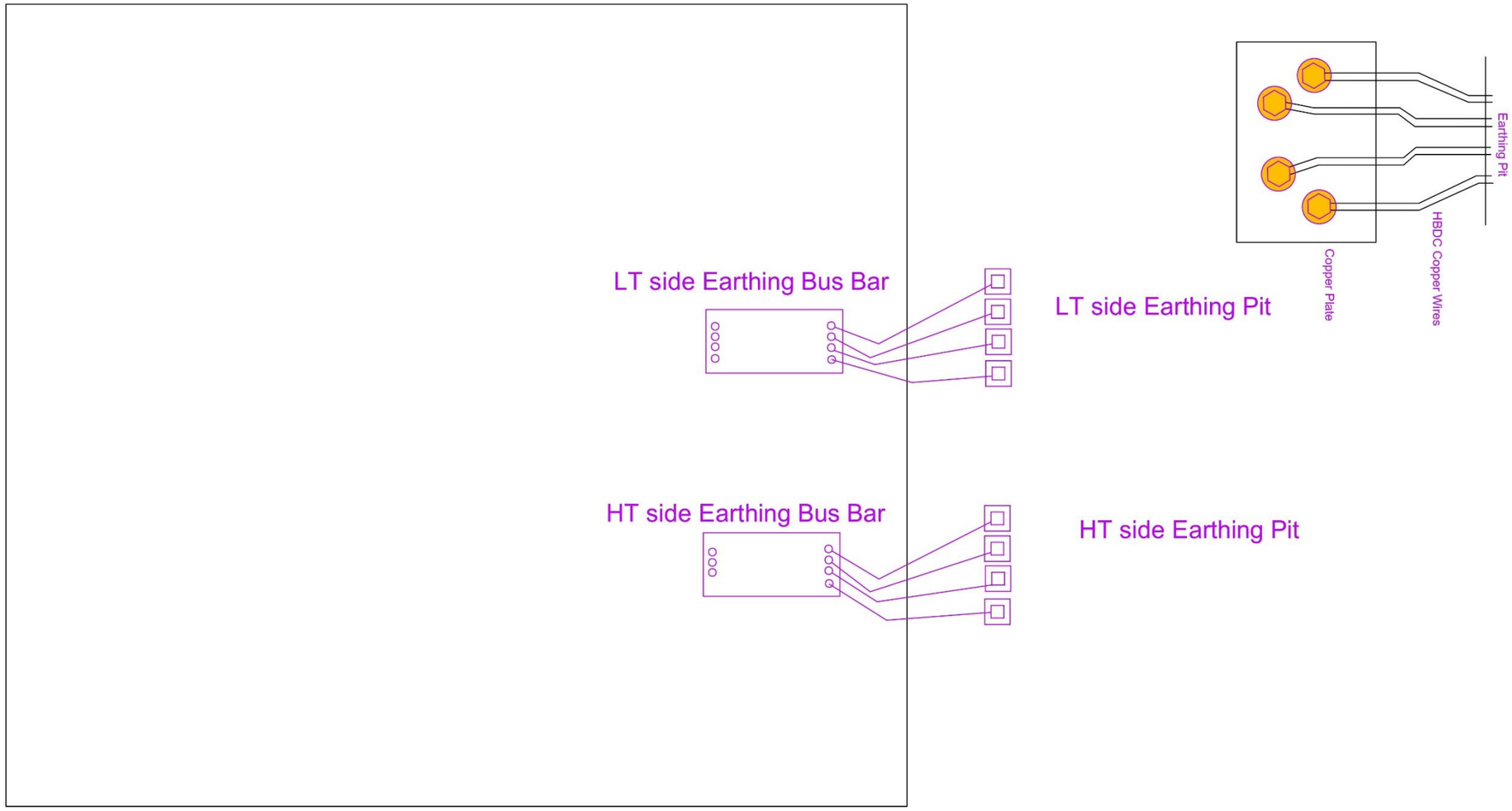

Riser Diagram

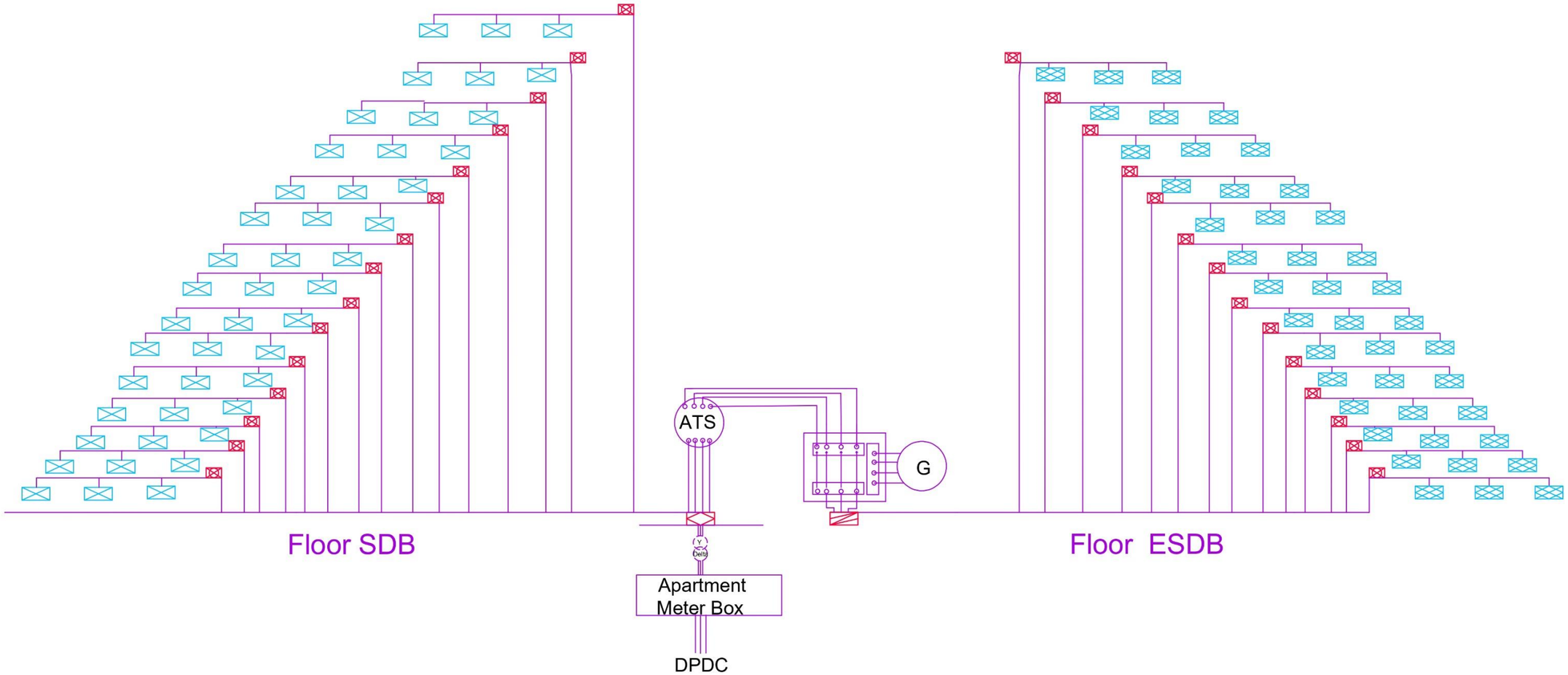

EMDB Diagram

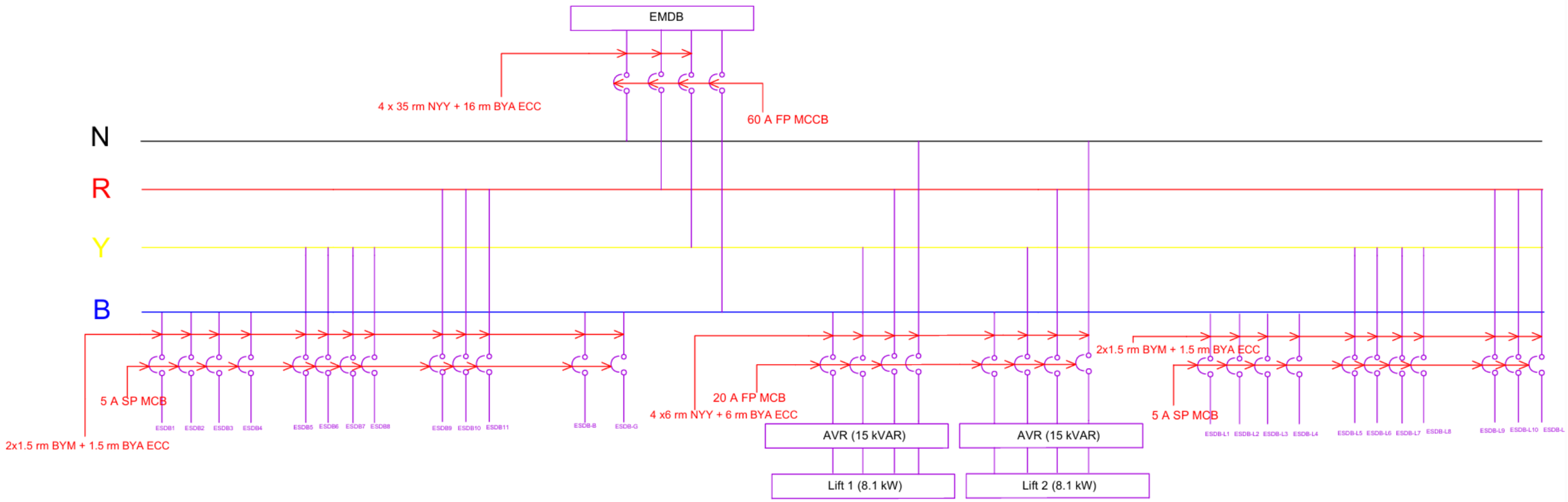

MDB Diagram

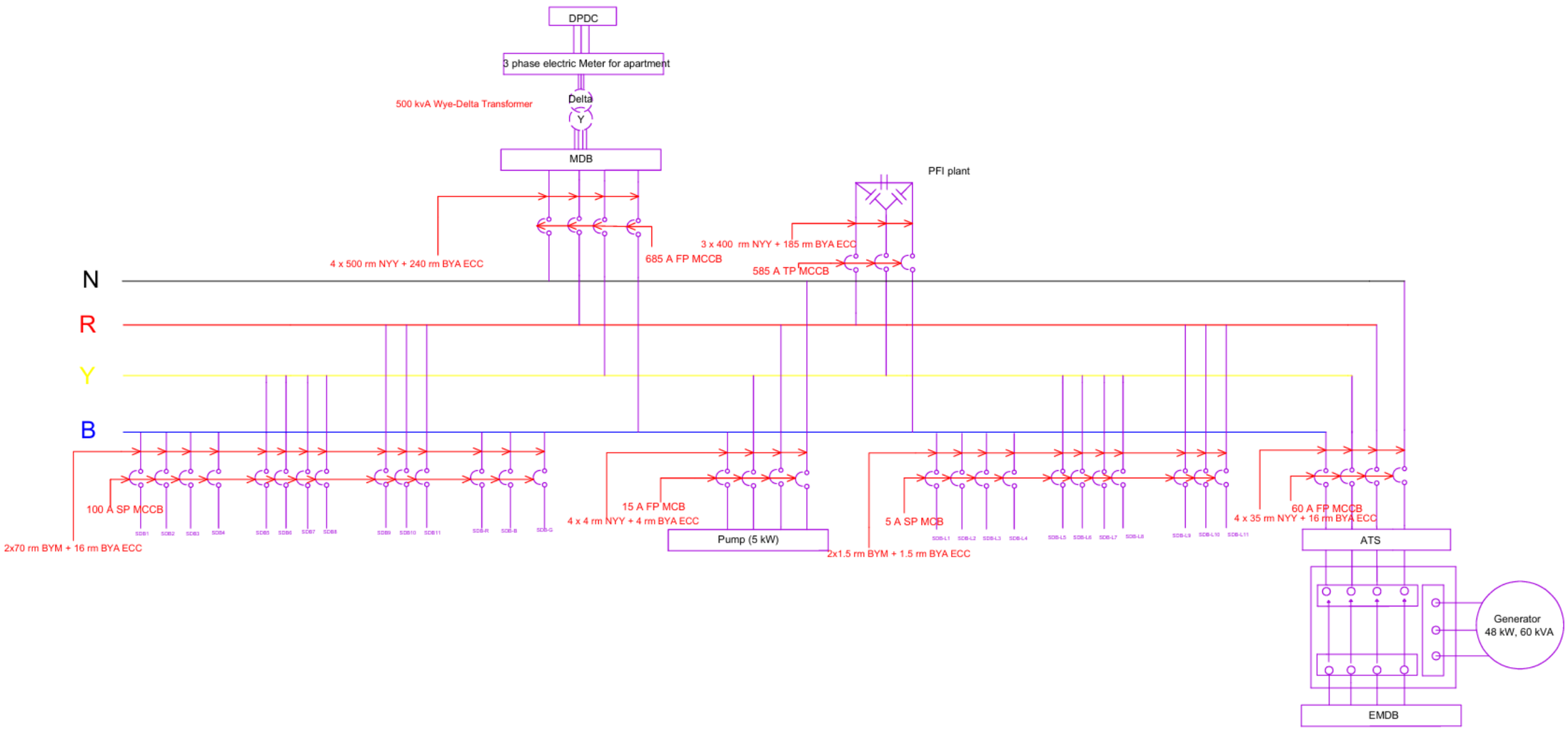
DPDC
3 phase electric Meter for apartment
500 kvA Wye-Delta Transformer
Delta
Y
MDB
PFI plant
4 x 500 rm NYY + 240 rm BYA ECC
685 A FP MCCB
3 x 400 rm NYY + 185 rm BYA ECC
585 A TP MCCB
N
R
Y
B
100 A SP MCCB
2x70 rm BYM + 16 rm BYA ECC
15 A FP MCB
4 x 4 rm NYY + 4 rm BYA ECC
Pump (5 kW)
5 A SP MCB
2x1.5 rm BYM + 1.5 rm BYA ECC
60 A FP MCCB
4 x 35 rm NYY + 16 rm BYA ECC
ATS
Generator
48 kW, 60 kVA
EMDB

Lightning Protection Design and Relevant Calculations

Index Figure	Description	Index
Use Of Structure	Houses and Similar Buildings with outside aerial	4
Type of Construction	Reinforced concrete with nonmetal roof	2
Contents	Ordinary domestic or office buildings	2
Degree of Isolation	Structure located in large area having structure or trees of similar height (large town)	2
Height of Structure	30-38m	16
Lightning Prevalence	Over 21	21
Total Index		47

"Risk Index" is the sum of the indices for all the factors, as given in Table 8.1.27. A few examples of calculation of Risk Index are given in Table 8.1.28, based on a marginal Risk Index of 40. **As risk index is greater than 40, Lightning Protect is necessary.**

Down Conductor Calculation

A Down Conductor shall be made with copper strip or Stranded PVC insulated annealed copper cable.

As per BNBC article 1.3.33.7, there will be one for the first 80 sq.m and then down conductors will be placed every 100 sq.m

Tota Roof Area = $331.8446937\ m^2$

Number of down conductors = $1 + \frac{331.8446937-80}{100} \approx 4$

Air Terminal Calculation

An air spike or air terminal shall be made with copper rod of minimum 12 mm diameter with tin coating on top. The terminal shall have a copper/brass base plate for mounting on top of roof, column, parapet wall using rowel bolts. The minimum dimension of such a base plate shall be 152 mm x 152 mm x 13 mm. The length and width may need to be increased depending on the number of connections of the down conductors and the roof conductors. Such connections are to be made using hexagonal head brass bolts and nuts of 10mm diameter with brass washers. Minimum height of the air terminal shall be 300 mm above the highest point of the building fulfilling all the conditions of NFPA 780.

As per BNBC article 1.3.33.8, Lightning arrester (including number and height) can also be designed and installed by using rolling sphere method following NFPA 780. Minimum height of the air terminal shall be in accordance with Sec 1.3.33.6

The rolling sphere equation is given by $d = 2\sqrt{2Rh - h^2}$

where r is the rolling sphere radius and h is the terminal height. d is the max distance between terminals.

Lightning Protection Level (LPL)	Rolling Sphere Radius (m)	Protection Level
Level I	20	Highest Protection
Level II	30	High Protection
Level III	45	Moderate Protection
Level IV	60	Basic Protection

Since our building is 11 floors, we prefer **high protection** as lightning strike probability is very high.

We choose R = 30m for moderate protection and h = 24 inch or 0.6096 m. **The minimum height as per BNBC 1.3.33.6 is 0.3 m.**

Using the rolling sphere equation, d = 12.04m.

Perimeter of the building is 87.64 m.

Number of air terminals = $\frac{87.64}{12} \approx 12$

Roof Conductor

A Roof Conductor shall be made with copper strip or Stranded PVC insulated annealed copper cable. This shall run along the periphery of the roof to link all air spikes and all down conductors installed on top of a building. The joints shall be made using clamps made of copper strips (of 1/8 inch minimum thickness) and appropriate brass bolts and washers of 3/8 inch minimum diameter.

As per BNBC article 1.3.33.6, this shall run along the periphery of the roof to link all air spikes and all down conductors installed on top of a building.

Lighting Protection System (LPS)

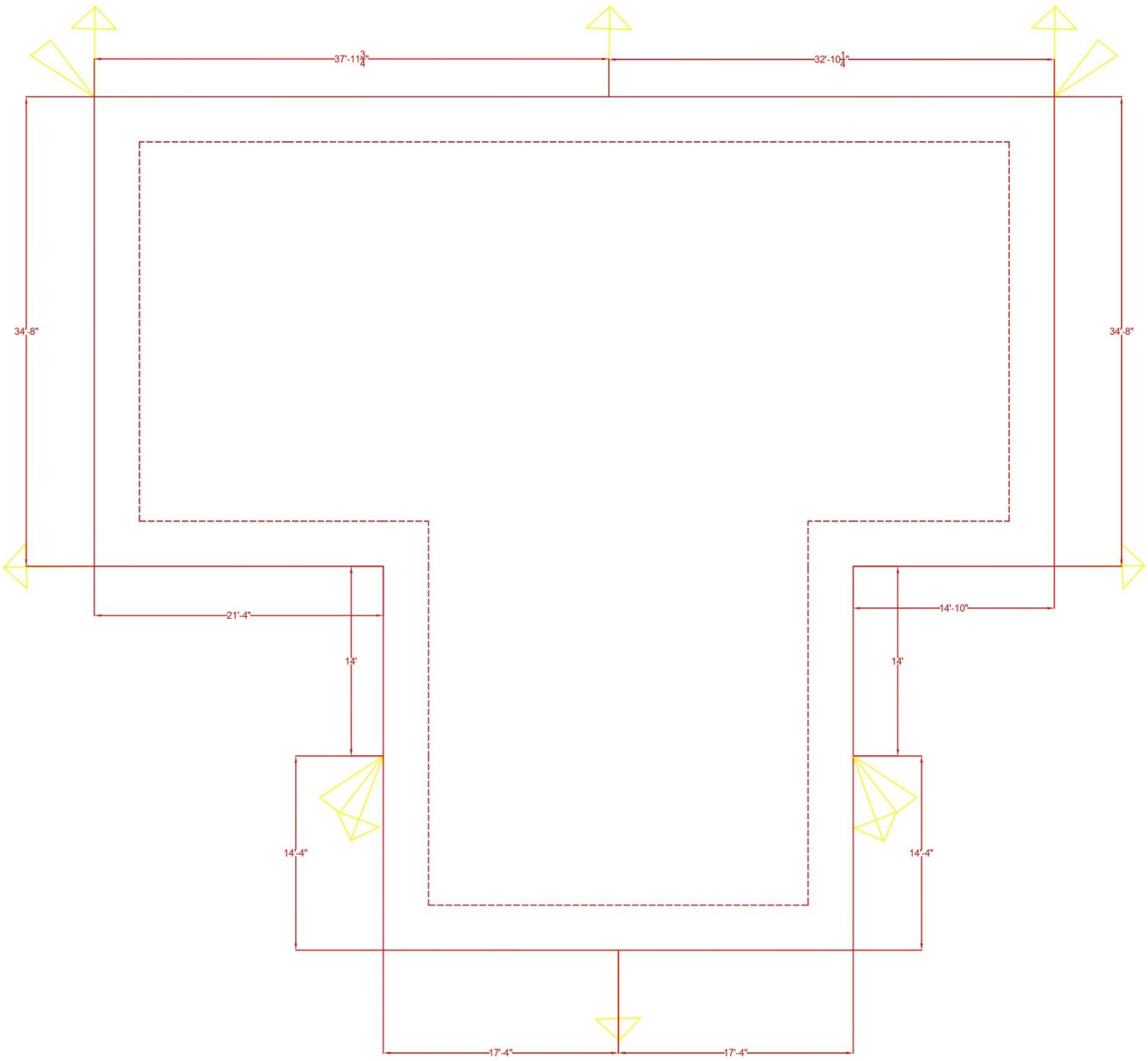

LPS Earthing

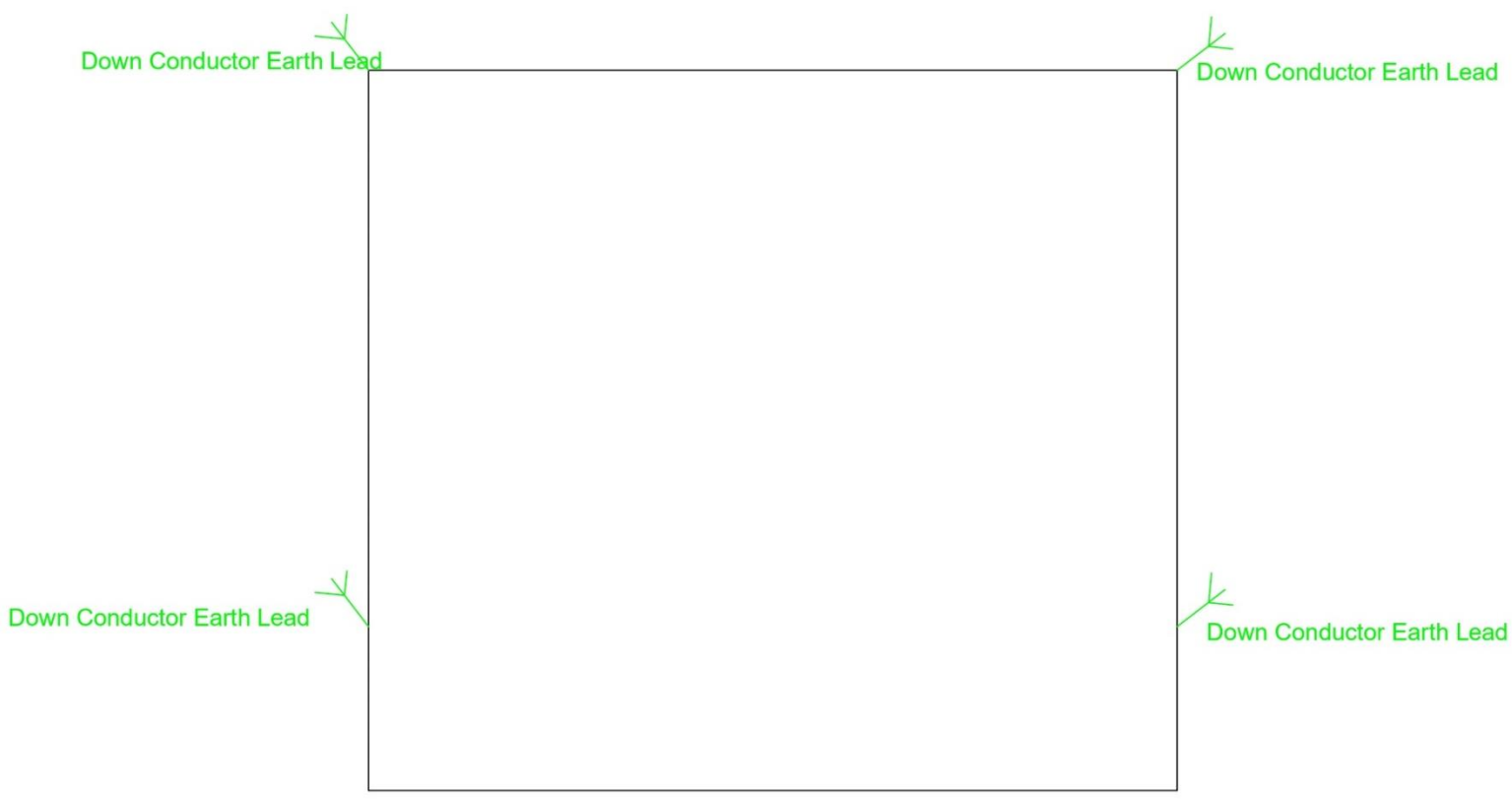

Conclusion

In this job, we designed the floor plan of a three-story building and laid out the conduit and electrical fittings. Next, we created a switchboard connection diagram that illustrates how the incoming electricity is dispersed around the apartment complex. The single line diagrams display various wire schedules and safety devices like circuit breakers in addition to the overall connectivity. We have designed the required lightning protection system to shield the building from electrical surges brought on by lightning strikes. As a result, we have practical experience with residential construction electrical service design.

Acknowledgements

We would like to thank Mr. Yeasir Arafat sir and Saif Ahmed Sunny sir for their valuable guidance in this project.

References

[1] BNBC Volume 3 of 3 Electrical Appendix

[2] Public Works Department

[3] EEE 414 Slides

Appendix

1.

Area or Activity	Illuminance (lux)
Dwelling Houses	
Bedrooms	
General	70
Bed-head, Dressing table	250
Kitchens	200
Dining rooms (tables)	150
Bathrooms	
General	100
Shaving, make-up	300
Stairs	100
Lounges	100
Garages & Porches	100
Basement Car Park	100
Porches, Entrances	70
Sewing and darning	600
Reading (casual)	150
Home work and sustained reading	300

2.

TABLE 12

Flourscent lamps(220 V), Standard (Construction)

Wattage (W)	Lenth of lamps (mm)	Lumimous flux (lm)
8	288	350
16	720	950
20	590	1250
40	1200	3200

3.

LUMNIMOUS FLUX CHART (F_i)

Light Type	Symbol	Watt Rating (W)	Lumen Rating (Lumen)
LED Bulb	LLA	12	1200
	LLB	18	1800
LED Tube	TLA	20	1800
	TLB	40	3600
Ceiling Light	CLA	12	1200
	CLB	18	1800

4.

Utilization factor											
Room Reflectance			Room Index								
Ceiling	Wall	Floor	0.75	1	1.25	1.5	2	2.5	3	4	5
0.7	0.5	0.2	0.43	0.49	0.55	0.6	0.66	0.71	0.75	0.8	0.83

5.

Table 8.4.9: Car Speed for Lift in Different Kinds of Usage

Building Type	Rise (m)	Minimum Car Speed (m/s)	Building Type	Rise (m)	Minimum Car Speed (m/s)
Office Building	0 to 40	2.0	Hospital (contd.)	31 to 40	1.6
	41 to 70	2.5		41 to 55	2.0
	71 to 85	3.6		56 to 75	2.5
	86 to 115	4.0		Above 75	3.6
	Above 115	5.0	Apartments	0 to 25	0.63
Hotels	0 to 40	2.0		26 to 40	1.0
	41 to 70	2.5		41 to 60	1.6
	71 to 85	3.6		Above 60	2.0
	86 to 115	4.0	Stores	0 to 30	1.0
	Above 115	5.0		31 to 45	1.6
Hospital	0 to 20	0.63		46 to 60	2.0
	21 to 30	1.0		Above 60	2.5

6.

Annexure-8

Table 8.1

Hoistway & Power Configurations for Passenger Lift According to Various Speed and Capacity

Persons	Rated Capacity (Kg) & maxm area(m2) as per EN 81	Rated Speed (m/s)	Net size of Car (Width x Depth) (mm)	Net size of Door (Width x Height) (mm)	Hoistway Size (Width x Depth) (mm)	Hoistway Size Overhead Height (mm)	Hoistway Size Pit Head (mm)	Motor Capacity (KW)	Machine Room Dimension (mm)	Maximum Current & [Running current] (Amp)
8	630 (1.66)	1.0	1200x1400	800x2100	1800x1900	4500	1500	4.0	1900x3700	14.8/9.2
		1.5/1.6				4600	1600	6.4		23.7/13.8
		2.0				4850	1800	8.3		30.9/17.1
		2.5				5100	1900	12.3		48.2/28.4
		3.0				5250	2100	14.1		57.3/32.8
		3.5				5400	2200	18.3		71/39
		4.0				5500	2300	24.0		96/52
10	800 (2.00)	1.0	1350x1450	900x2100	2000x2000	4500	1500	5.0	2100x3800	15.7/10.4
		1.5/1.6				4600	1600	8.1		25.8/16.2
		2.0				4850	1800	10.5		34.3/20.5
		2.5				5100	1900	15.0		55.7/34.4
		3.0				5250	2100	17.1		65.8/39.5
		3.5				5400	2200	22.7		86.4/46.3
		4.0				5500	2300	29.5		115.2/63

7.

Table 8.1.24: Recommended Area for Standby Generator Room

Capacity (kW)	Area (m^2)
1 × 25	20
1 × 48	24
1 × 100	30
1 × 150	36
1 × 300	48
1 × 500	56

8.

Table 8.1.23: Recommended Area for Transformer and Substation of Different Capacities

Capacity of Transformer (kVA)	Transformer Area (m^2)	Total Substation Area (with HT, LT Panels & Transformer Room but without Generators), (m^2)
1 × 150	12	45
1 × 250	13	48
2 × 250	26	100
1 × 400	13	48
2 × 400	30	100
3 × 400	40	135

9.

8.6 **AVR**

Supply, installation, testing & commissioning of following 415V, 3-phase, 50Hz electronically controlled, automatic voltage stabilizer/regulator locally assembled in metallic painted cabinet suitable for input voltage range 300 - 460V, output stepless continuous voltage 400V ± 3%, correction speed 20V/sec. (minimum) complete with phase failure and spike & surge-fluctuation voltage protection, auto shut off at high & low voltage with auto reset system, overload & instantaneous short circuit protection by MCCB & relay, transient suppression circuit, ON-OFF-TRIP indicators, voltmeter & ammeter, bypass circuit etc.

Assembled by AEG/ MICRO/ NAVANA/ RAHIMAFROOZ / GREEN POWER/ GIGA POWER/ JUST POWER or equivalent accepted/approved by the Engineer.

8.6.1	10 KVA AVR	Each	**Tk.**	**84,850.00**	**Tk.**	**84,850.00**	**Tk.**	**84,850.00**	**Tk.**	**84,850.00**
8.6.2	15 KVA AVR	Each	**Tk.**	**93,103.00**	**Tk.**	**93,103.00**	**Tk.**	**93,103.00**	**Tk.**	**93,103.00**

10.

2.1.4 **OIL TYPE TRANSFORMER**

Supply of following oil-immersed, natural air cooled, 3-phase, 50-Hz, 11KV/0.415 KV & 0.24 KV indoor/outdoor type distribution transformer of DYN11 vector group complete with two windings of high conductivity copper having basic impulse insulation level 75 KV , dielectric strength 28 KV (for 1 min), HT & LV porcelain bushings, manual 5 position (0, ±2.5%, ±5%) standard tap changer, conservator, thermometer, oil inlet & outlet valves, oil level indicator, dehydrating breather, lifting lugs, earthing terminals, wheel, rating and diagram nameplate etc. including painting, suitable for operation at 40°C ambient temperature with maximum temperature rise 60°C, locally manufactured and tested as per NEMA / VDE / IEC / BS standards along with BDS IEC 60076,PART 1 : 2016 as per accepted/approved by the Engineer-in-charge.

11.

2.1.4.8 (a) Capacity : **500 KVA**
(b) No load loss : 1000 watts (maximum)
(c) Full load loss : 5800 watts (maximum)
(d) Percentage impedance : 4% @ ±10% at 75°C

12.

The recommended area required for substation and transformer rooms for different capacities are given in Table 8.1.23 for general guidance. Minimum recommended spacing between the transformer periphery and walls should be :

(i) 0.75 m for Transformer installed in a room with wall on two sides.

(ii) 1.0 m for Transformer installed in a room with wall on three sides.

(iii) 1.25 m for Transformer installed in an enclosed room.

(iv) 1.5 m distance from one to another transformer for multiple transformers in room for 11 kV voltage level and 2.5 m distance for higher level of voltage.

13.

BANGLADESH UNIVERSITY OF ENGINEERING &TECHNOLOGY

Course No. EEE-230

Table for Cables, Conduits, ECC, EL, Voltage drop and Current ratings of different specifications as per Manual of Eastern Cables, BICC cables and Tables, Electrical Conductors (International Standard Sizes) etc. :

A	B	C	D	E	F		G	H	I		J	
					a'	b'			a''	b''	a'''	B'''
3/0.029	1.5	5	16	10	6	10		27	27	22	16	20
7/0.029	2.5	10	16	10	4	7		16	36	30	22	28
7/0.036	4	15	14	10	3	5	1	10	47	39	30	37
7/0.044	6	20	14	10	2	4	1	6.8	59	50	38	47
7/0.052	10	30	10	10	1	2	1.5	4	78	68	52	63
7/0.064	16	40	10	10		1	1.5	2.6	100	94	70	85
19/0.052	25	50	6	6		1	2	1.6	130	125	91	110
19/0.064	35	60	6	6			2	1.2	155	160	112	136
19/0.072	50	70	6	6			2	0.93	185	195	136	164
19/0.083	70	100	1/0	1/0			2	0.65	225	245	173	207
37/0.072	95	120	1/0	1/0			2.5	0.48	270	300	216	253
37/0.083	120	150	1/0	1/0			2.5	0.4	310	350	244	291
37/0.093	150	200	1/0	1/0			3	0.34	350	405		333
37/0.130	185	250	3/0	3/0			3.5	0.29	390	460		381
61/0.093	240	300	3/0	3/0			4	0.24	450	555		452
61/0.103	300	425	3/0	3/0			4	0.22	515	640		526
91/0.093	400	585	3/0	3/0			6	0.2	586	770		639
91/0.103	500	685	3/0	3/0			6	0.18	680	900		752
127/0.103	630	800	3/0	3/0			6	0.17	800	1030		855

A : Single core cable construction diameter, inch .... as per Imperial Standard Size : B.S.S (old).

B : Single core cable construction area, mm² .... as per Metric Standard Size : VDE.

14.

1.14.1	**Cables manufactured by Govt. of Bangladesh owned / shared company ltd. (Eastern cables) approved by the Engineer In Charge.**					
1.14.1.1	1C-4x2.5sqmm (NYY) with 2.5 sqmm (BYA) ECC wire through PVC pipe of minimum inner dia 30 mm having wall thickness of 1.9 mm	Meter	563.00	562.00	559.00	559.00
1.14.1.2	1C-4x4sqmm (NYY) with 4 sqmm (BYA) ECC wire through PVC pipe of minimum inner dia 30 mm having wall thickness of 1.9 mm	Meter	742.00	741.00	738.00	738.00
1.14.1.3	1C-4x6sqmm (NYY) with 6 sqmm (BYA) ECC wire through PVC pipe of minimum inner dia 40 mm having wall thickness of 2.2 mm	Meter	996.00	994.00	991.00	991.00
1.14.1.4	1C-4x10sqmm (NYY) with 10 sqmm (BYA) ECC wire through PVC pipe of minimum inner dia 40 mm having wall thickness of 2.2 mm	Meter	1,345.00	1,344.00	1,339.00	1,339.00
1.14.1.5	1C-4x16sqmm (NYY) with 16 sqmm (BYA) ECC wire through PVC pipe of minimum inner dia 40 mm having wall thickness of 2.2 mm	Meter	2,036.00	2,034.00	2,030.00	2,030.00
1.14.1.6	1C-4x25sqmm (NYY) with 16 sqmm (BYA) ECC wire through PVC pipe of minimum inner dia 50 mm having wall thickness of 2.5 mm	Meter	2,892.00	2,891.00	2,886.00	2,886.00

Item No.	Description of Items	Unit	Unit Rate in Dhaka & Mymensingh Zone (Tk)	Unit Rate in Chattogram & Sylhet Zone (Tk)	Unit Rate in Khulna,Barishal & Gopalganj (Tk)	Unit Rate in Rajshahi & Rangpur (Tk)
1.14.1.7	1C-4x35sqmm (NYY) with 16 sqmm (BYA) ECC wire through PVC pipe of minimum inner dia 50 mm having wall thickness of 2.5 mm	Meter	3,719.00	3,718.00	3,713.00	3,713.00
1.14.1.8	1C-4x50sqmm (NYY) with 25 sqmm (BYA) ECC wire through PVC pipe of minimum inner dia 65 mm having wall thickness of 2.9 mm	Meter	5,236.00	5,235.00	5,230.00	5,230.00
1.14.1.9	1C-4x70sqmm (NYY) with 35 sqmm (BYA) ECC wire through PVC pipe of minimum inner dia 65 mm having wall thickness of 2.9 mm	Meter	7,188.00	7,186.00	7,181.00	7,181.00
1.14.1.10	1C-4x95sqmm (NYY) with 50 sqmm (BYA) ECC wire through PVC pipe of minimum inner dia 75 mm having wall thickness of 3 mm	Meter	9,500.00	9,498.00	9,493.00	9,493.00
1.14.1.11	1C-4x120sqmm (NYY) with 70 sqmm (BYA) ECC wire through PVC pipe of minimum inner dia 75 mm having wall thickness of 3 mm	Meter	12,202.00	12,200.00	12,194.00	12,194.00
1.14.1.12	1C-4x150sqmm (NYY) with 70 sqmm (BYA) ECC wire through PVC pipe of minimum inner dia 100 mm having wall thickness of 3.4 mm	Meter	14,878.00	14,876.00	14,870.00	14,870.00
1.14.1.13	1C-4x185sqmm (NYY) with 95 sqmm (BYA) ECC wire through PVC pipe of minimum inner dia 100 mm having wall thickness of 3.4mm	Meter	18,846.00	18,844.00	18,838.00	18,838.00
1.14.1.14	1C-4x240sqmm (NYY) with 120 sqmm (BYA) ECC wire through PVC pipe of minimum inner dia 125 mm having wall thickness of 3.4 mm	Meter	24,191.00	24,188.00	24,180.00	24,180.00
1.14.1.15	1C-4x300sqmm (NYY) with 120 sqmm (BYA) ECC wire through PVC pipe of minimum inner dia 125 mm having wall thickness of 3.4 mm	Meter	29,674.00	29,672.00	29,663.00	29,663.00
1.14.1.16	1C-4x400sqmm (NYY) with 185 sqmm (BYA) ECC wire through PVC pipe of minimum inner dia 125 mm having wall thickness of 3.4 mm	Meter	38,919.00	38,917.00	38,908.00	38,908.00
1.14.1.17	1C-4x500sqmm (NYY) with 240 sqmm (BYA) ECC wire through PVC pipe of minimum inner dia 150 mm having wall thickness of 4.5 mm	Meter	47,743.00	47,740.00	47,732.00	47,732.00
1.14.1.18	1C-4x630sqmm (NYY) with 300 sqmm (BYA) ECC wire through PVC pipe of minimum inner dia 200 mm having wall thickness of 5.3 mm	Meter	60,651.00	60,648.00	60,640.00	60,640.00