University of Moratuwa

Faculty of Engineering

Department of Electronic and Telecommunication Engineering

Module Code: BM1190

Module Name: Engineering Design Project

Project Title: P.A.P.A.Y.A. — Posture Analysis and Proactive Alignment for Your Awareness

Team Name: Prometheus

Team Members

COLOMBAGE D.M.	(Index No: 230108U)
IMBULPITIYA B.N	(Index No: 230259G)
KEERAWELLA K.P.C.P	(Index No: 230332B)
RAHMAN M.F.A	(Index No: 230507R)

Contents

1 Problem Description, Motivation, and Justification **1**

1.1 Problem Statement 1

1.2 Motivation 1

1.3 Justification of Selection, Survey Results and Evidence 2

2 Technical Feasibility **3**

2.1 Resource Availability 3

2.2 Functionality Achieved 3

2.3 Performance Targets Reached 4

3 Product Architecture **5**

3.1 System Block Diagram 5

3.2 Block Descriptions and Components Used 5

3.3 Deviations from Original Plan 6

4 Product Enclosure and PCB Design **7**

4.1 Initial Sketches 7

4.1.1 Enclosure for the PCB 7

4.1.2 Enclosure for the Power Unit 7

4.1.3 Cushion Design 8

4.2 Finalized Designs 9

4.2.1 Final Enclosure for the PCB 9

4.2.2 Final Enclosure for the Power Unit 9

4.2.3 Final PCB Design 10

5 Final Product **10**

5.1 Specifications 10

5.2 Power Consumption and Battery Life 11

5.3 Images of the Final Product 11

6 Marketing, Sales, and Future Outlook 11

6.1 Marketing Strategy 12

6.2 Sales Approach 12

6.3 Beyond the Initial Launch 13

7 Project Budget and Bill of Quantities (BOQ) 13

7.1 Component Cost Breakdown 13

7.2 Selling Price Justification 14

7.3 Cost Reduction Potential and Future Scalability 14

7.4 Optimized Bill of Materials (For Future Batch Production) 15

7.5 Market-Aligned Price for Future Launch 15

8 Future Improvements 15

9 Task Allocation Among Members 16

1 Problem Description, Motivation, and Justification

1.1 Problem Statement

With the rise of desk jobs, remote work, and increased screen time, poor sitting posture has become a major health concern worldwide. Studies show that over 80% of adults experience back pain at some point in their lives, with bad posture being a leading cause (American Chiropractic Association, 2023).

Additionally, musculoskeletal disorders (MSDs) account for nearly 30% of workplace injuries, leading to lost productivity and increased medical costs (U.S. Bureau of Labor Statistics, 2022).

Sustained improper posture can cause chronic back and neck pain, spinal misalignment, poor circulation, and even breathing difficulties. Furthermore, prolonged sitting is linked to increased risks of heart disease, diabetes, and certain cancers.

Back pain alone is the single leading cause of disability worldwide, resulting in over 264 million lost workdays annually.

While ergonomic chairs are designed to support proper posture, they often force users into a fixed position rather than encouraging them to build the habit of maintaining good posture independently. As a result, once users switch back to a regular chair, they tend to revert to poor posture.

1.2 Motivation

As students who spend countless hours sitting at desks, we've personally experienced the consequences of poor posture. Long hours of studying and working on computers often lead to slouching, back pain, and neck strain, making it clear how critical maintaining good posture is for overall health. Observing our peers, we noticed that this issue wasn't isolated to students—it was prevalent in office spaces, professional environments, and even home offices, affecting people of all ages and professions.

Despite growing awareness of the negative impact of poor posture, we found that the solutions available were often reactive rather than preventive. For example, pain medications or physical therapy are commonly used only after pain and discomfort have already set in, but they do not address the root cause of the problem—bad posture during daily activities. Ergonomic furniture, such as specialized chairs, offers some relief but is expensive and not easily accessible to everyone.

This realization sparked a desire to find a more accessible, proactive solution—one that would help people prevent musculoskeletal damage before it even occurred. We wanted to

create a product that could seamlessly integrate into existing workspaces, providing real-time feedback on posture without requiring drastic changes to current habits or setups.

After several brainstorming sessions, we came up with the idea of **P.A.P.A.Y.A.** (Posture Analysis and Proactive Alignment for Your Awareness), a smart cushion that helps users maintain better posture through subtle, real-time feedback.

1.3 Justification of Selection, Survey Results and Evidence

To ensure our solution was grounded in real-world needs, we conducted a survey targeting our core demographic — students and desk-bound individuals in Sri Lanka. A total of **95 participants** responded, and the results provided compelling evidence:

- **63%** of respondents reported sitting for more than 6 hours a day — highlighting the prolonged sedentary routines of our target audience.
- Over **70%** reported experiencing back pain or discomfort while sitting, indicating a high prevalence of posture-related musculoskeletal issues.
- The majority admitted to slouching, leaning forward, or losing track of posture while studying or working.
- Crucially, **91.6%** of respondents expressed willingness to try a posture-correcting solution — but only if it was **comfortable, discreet, and non-intrusive**.

These findings directly validate the urgency and relevance of our problem statement. They confirm that the target population is not only affected by poor posture but is also open to intervention — provided it integrates effortlessly into their daily routines.

Our idea for **P.A.P.A.Y.A.** was shaped by this data: a posture-support solution that is subtle, comfortable, and reinforces good posture habits through proactive feedback. Rather than forcing users into rigid alignment like traditional braces, or requiring conscious app interaction, **P.A.P.A.Y.A.** is designed to gently **nudge the user towards self-correction**, building long-term, sustainable posture habits.

This human-centered and data-driven approach is what justifies the selection of this problem — and fuels our motivation to bring the solution to life.

2 Technical Feasibility

2.1 Resource Availability

All required components and materials for the system are low-cost, widely available, and successfully integrated into the MVP:

- **Hardware Components:** The posture correction system utilizes Force Sensitive Resistors (FSR402s), an ultrasonic sensor (HC-SR04), an ATMega328P-PU microcontroller, vibration motor, tactile buttons, and a battery pack. All these components are affordable and readily accessible through local and online vendors.
- **Power Supply:** The system is powered by a 2-cell 7.4V Li-ion battery, providing sufficient runtime for 2–4 hours of daily usage. Under continuous operation, the battery can last up to 18 hours, ensuring reliable performance throughout a full day of use.
- **Manufacturing:** The external enclosure was 3D-printed in-house using ABS material. This shows that rapid prototyping and small-scale manufacturing can be done cost-effectively with consumer-grade 3D printing technology.
- **Cushion Material:** Automotive-grade foam was selected for the cushion due to its durability, comfort, and ease of availability. It supports prolonged sitting without degrading sensor accuracy or user comfort.

2.2 Functionality Achieved

The MVP demonstrates all core functionalities necessary for a posture-correction product:

- **Posture Detection:** The system monitors posture through a combination of pressure readings from FSRs (to detect leaning, slouching, and shifting) and distance measurements from the backrest using an HC-SR04 ultrasonic sensor. A healthy posture threshold was set at less than 10 cm from the backrest.
- **User Feedback:** A vibration motor provides real-time haptic feedback when poor posture is detected. The feedback is discreet, non-intrusive, and helps build posture awareness without drawing attention in shared environments.
- **User Controls:** The cushion includes a simple ON/OFF switch for power control and a battery level check button with LED indication for convenience.

2.3 Performance Targets Reached

- Posture detection accuracy was evaluated through user trials. The system currently achieves a detection success rate of approximately 70%, effectively identifying slouching and hunching based on sensor data.
- The feedback mechanism is tuned to activate only when posture deviates significantly from optimal alignment, thus minimizing false positives caused by natural movements such as typing or shifting slightly in the seat.
- All electronic components are insulated within the cushion using layered foam to eliminate direct skin contact and avoid overheating, ensuring both safety and comfort.

3 Product Architecture

3.1 System Block Diagram

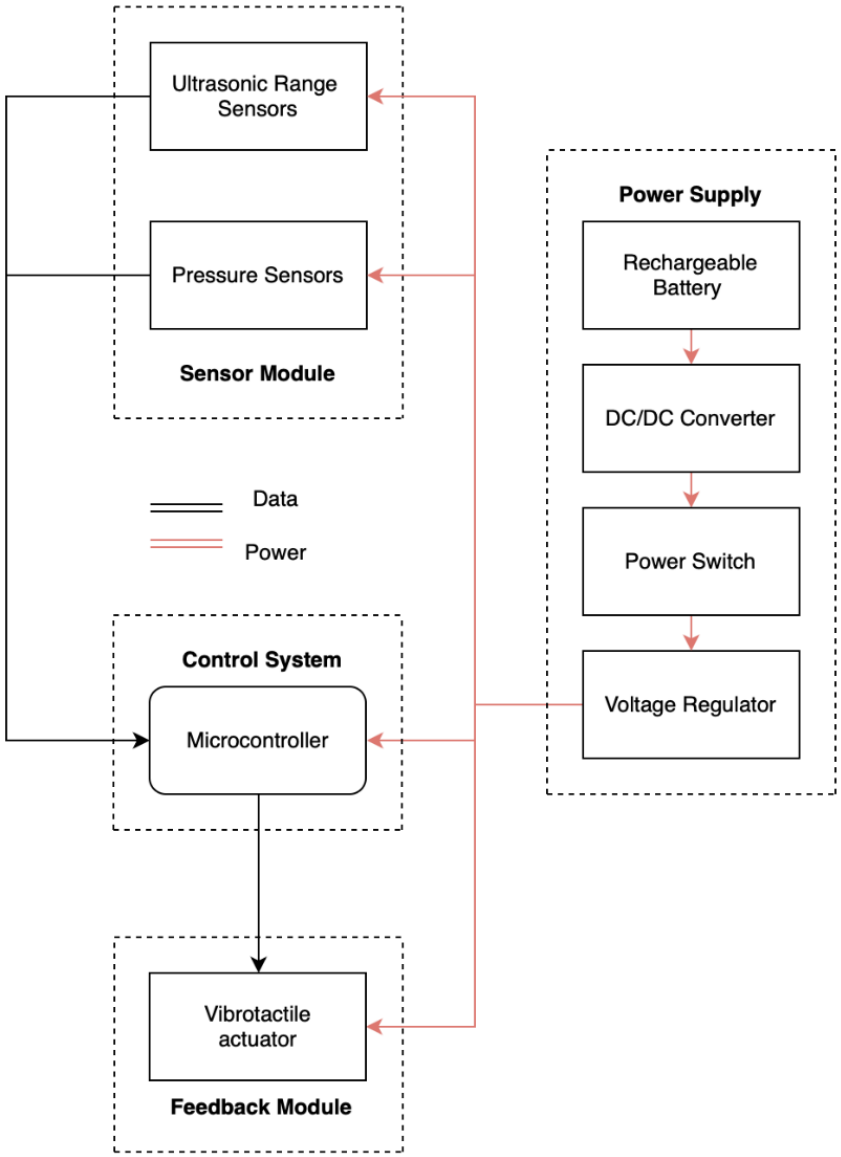

Figure 1: System Block Diagram of P.A.P.A.Y.A.

3.2 Block Descriptions and Components Used

- **Sensor Module:**
  - **Components:**

    - 8x FSR402 Force Sensitive Resistors
    - 1x HC-SR04 Ultrasonic Range Sensor
  - **Function:** Detects seating posture through pressure distribution on the cushion (via FSRs) and measures the user's distance from the backrest (via the ultrasonic sensor). These inputs determine whether the user is slouching, leaning forward, or seated properly.

- **Control System:**
  - **Component:** ATmega328P-PU Microcontroller (on a custom PCB)
  - **Function:** Acts as the central processing unit of the system. It reads sensor data, processes posture logic, and activates the feedback module if poor posture is detected.

- **Feedback Module:**
  - **Component:** Vibrotactile Actuator (vibration motor)
  - **Function:** Delivers non-intrusive, real-time haptic feedback to gently alert the user when bad posture is detected, helping them build long-term posture habits.

- **Power Supply:**
  - **Components:**
    - 2-cell 7.4V Rechargeable Li-ion Battery
    - DC-DC Converter
    - Voltage Regulator
    - Power Switch
  - **Function:** Powers the entire system. The voltage regulator ensures stable 5V output for sensitive components, and the DC-DC converter manages battery voltage fluctuations. The power switch allows user control.

3.3 Deviations from Original Plan

- Originally planned to use a 3-cell (11.1V) battery but shifted to a 2-cell (7.4V) system to improve safety, reduce weight, and optimize cost.
- Added a battery level indicator using LEDs to improve user awareness of device charge level — a feature not included in the original design.
- Early concepts considered Bluetooth and app integration, which were later deprioritized to focus on core MVP posture feedback functionality.

4 Product Enclosure and PCB Design

4.1 Initial Sketches

4.1.1 Enclosure for the PCB

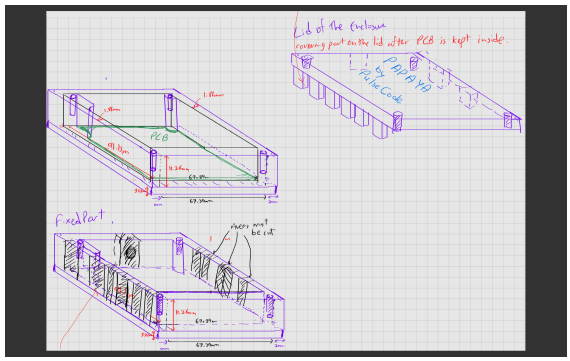

Figure 2: Initial Sketch: Enclosure for the PCB

4.1.2 Enclosure for the Power Unit

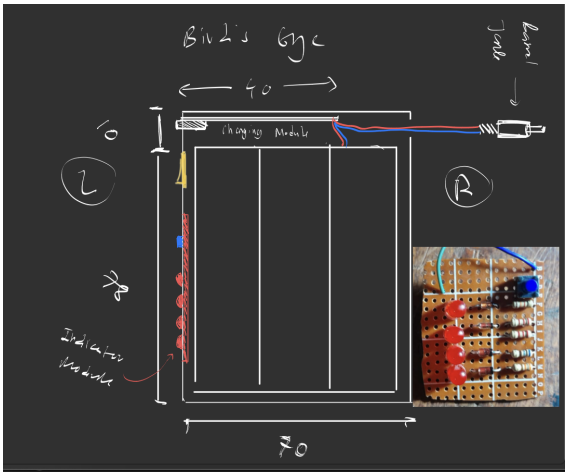

Figure 3: Initial Sketch of the Enclosure for the Power Unit: Top View

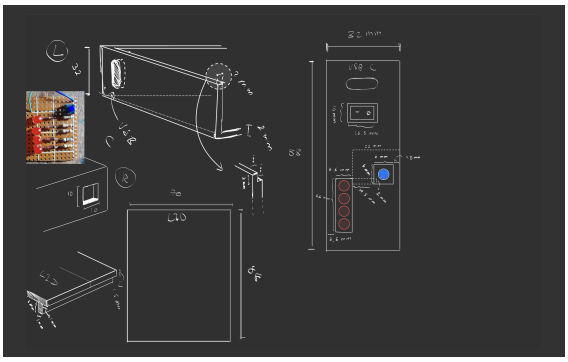

Figure 4: Initial Sketch of the Enclosure for the Power Unit: Side View

4.1.3 Cushion Design

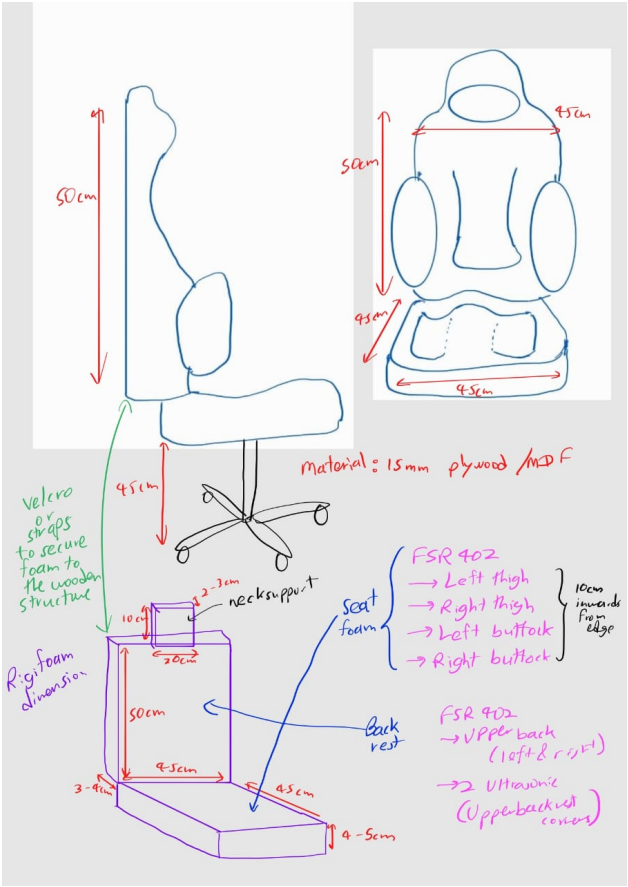

Figure 5: Initial Cushion Layout with Embedded Sensor Zones

4.2 Finalized Designs

4.2.1 Final Enclosure for the PCB

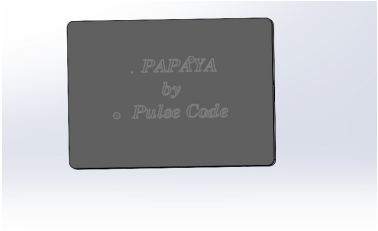

Figure 6: Top View

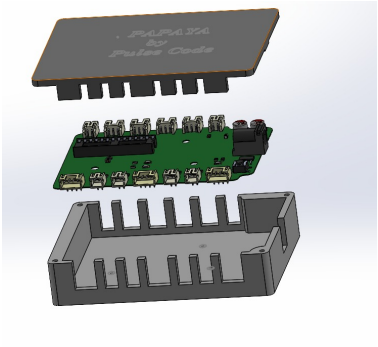

Figure 7: Side View

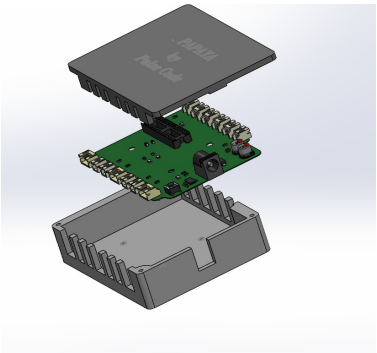

Figure 8: Side View

Figure 9: Final Sketches of Enclosure for the PCB - Different Views

4.2.2 Final Enclosure for the Power Unit

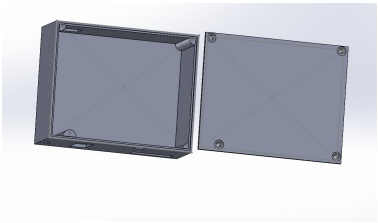

Figure 10: Top View

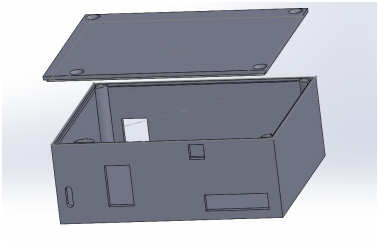

Figure 11: Side View

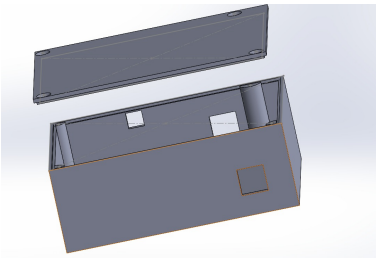

Figure 12: Side View

Figure 13: Final Sketches of Enclosure for the Power Unit — Different Views

4.2.3 Final PCB Design

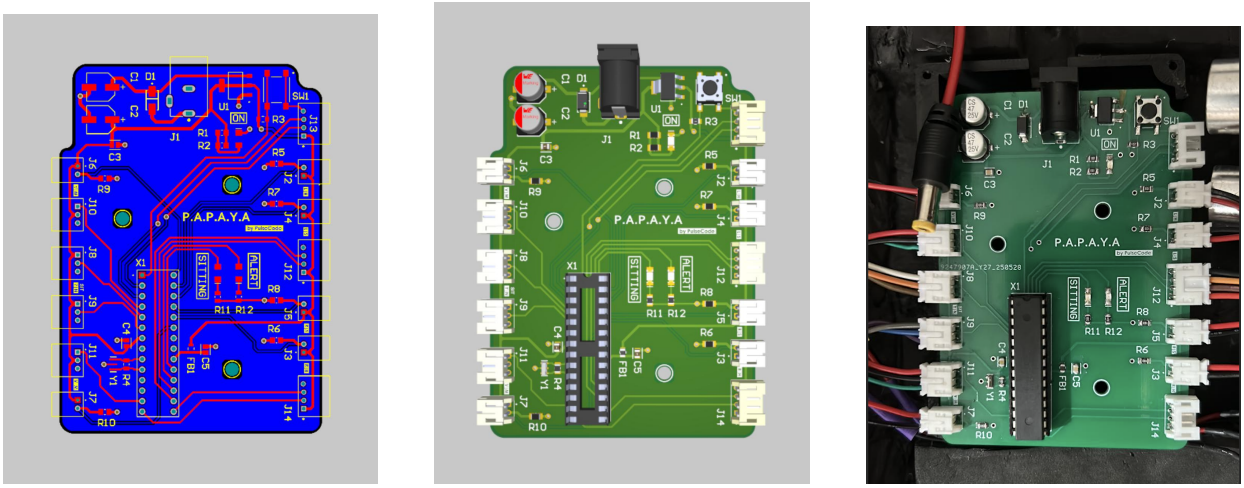

Figure 14: PCB design

5 Final Product

5.1 Specifications

- **Microcontroller:** ATmega328P (custom PCB)
- **Sensors:** 8x FSR402 Pressure Sensors, 1x Ultrasonic Range Sensor (HC-SR04)
- **Feedback Module:** Vibration motor for haptic alerts
- **Power Supply:** 2-cell 7.4V Li-ion battery
- **Battery Level Indicator:** LED-based, 4 level indicator
- **Charging:** USB-C 2S module for recharging
- **Cushion Material:** Automotive-grade foam + stitched seat cover
- **Power Control:** Manual power switch
- **System Enclosure:** 3D-printed ABS housing

5.2 Power Consumption and Battery Life

The system is powered by a **7.4V 2-cell Li-ion battery**, offering:

- **Typical usage:** 2–4 hours/day — comfortably lasts multiple days without charging.
- **Continuous operation:** Up to **18 hours** of uninterrupted use per full charge.
- **Charging time:** Approx. 3–4 hours (via USB-C module).

The battery level indicator provides real-time feedback to users about the remaining charge, ensuring the system remains reliable during extended sessions.

5.3 Images of the Final Product

Figure 15: Final product — Front and Side Views

6 Marketing, Sales, and Future Outlook

Our primary target market consists of individuals who remain seated for extended periods each day — including students, desk-bound professionals, remote workers, and freelancers.

This segment is particularly vulnerable to posture-related health issues and has shown strong interest in affordable, non-intrusive solutions. Our user survey supports this, with over 91% of respondents expressing willingness to adopt a posture-correcting product if it was comfortable and discreet.

6.1 Marketing Strategy

To effectively reach our audience, we propose a multi-pronged marketing strategy:

- **Campus and Workspace Outreach:** Partnering with universities, coworking spaces, and offices to conduct demos and awareness sessions.
- **Building Study Booths at Universities:** During exam seasons or high-stress academic periods, we plan to set up posture-aware study booths. These booths will allow students to experience our product in action while studying, demonstrating its comfort and effectiveness in real-world conditions.
- **Social Media Campaigns:** Launching targeted content on platforms such as Instagram, TikTok, and LinkedIn to raise awareness of posture-related problems and promote our solution.
- **Influencer and Health Professional Endorsements:** Collaborating with physiotherapists, ergonomics experts, and productivity influencers to lend credibility and promote the product.
- **Referral and Early Adopter Programs:** Offering discounts and incentives to early users who share their experiences and contribute to word-of-mouth growth.

6.2 Sales Approach

We aim to adopt a direct-to-consumer (D2C) model in the early stages, supported by the following sales channels:

- **E-commerce Platforms:** Launching via a dedicated website and local platforms such as Daraz to ensure easy accessibility.
- **Pop-up Booths:** Setting up demonstration booths at educational institutions and tech expos to showcase the product.
- **B2B Opportunities:** Expanding into corporate wellness programs and offering the cushion as an ergonomic solution in office environments.

6.3 Beyond the Initial Launch

Looking ahead, we plan to expand and refine the product and its features to increase market reach and provide deeper user value:

- **Mobile Integration:** Introducing a companion mobile application for posture tracking and personalized feedback.
- **Custom Cushion Designs:** Developing variants for specific use cases such as gaming chairs, office chairs, and vehicle seats.
- **Subscription-based Wellness Insights:** Providing AI-driven posture behavior analysis and wellness tips through a subscription model.

Our vision is not just to correct posture but to instill a culture of mindful sitting — where better posture becomes a habit, not just a reaction.

7 Project Budget and Bill of Quantities (BOQ)

7.1 Component Cost Breakdown

The table below shows the detailed BOQ for our **P.A.P.A.Y.A.** posture-correcting cushion prototype.

Component	**Unit Cost (LKR)**	**Quantity**	**Total (LKR**
ATMega328P-PU Microcontroller (TM0009)	750	1	750
Ultrasonic Sensor (HC-SR04)	195	1	195
FSR402 Flexible Force Pressure Sensor	1,555	8	12,440
PCB + Tax	3,363	1	3,363
Miscellaneous Components (resistors, connectors, etc.)	1,050	1	1,050
Custom Enclosures	2,047	1	2,047
Vibration Motor	295	1	295
Cushion (Foam + Seat Cover)	3,000	1	3,000
Rechargeable Batteries (3.7V)	490	2	980
USB-C Charging Module	535	1	535
Total Estimated Cost			**23,140**

Table 1: Bill of Quantities (BOQ) for P.A.P.A.Y.A. Prototype

7.2 Selling Price Justification

Based on the prototype cost of **LKR 23,140**, and considering essential operational expenses:

- Labor and assembly: **LKR 1,500**
- Packaging and logistics: **LKR 500**
- Marketing materials: **LKR 500**

The estimated per-unit cost for small-batch production is approximately **LKR 25,640**. Applying a modest profit margin of 15–20% for sustainability, the initial proposed selling price is:

Selling Price: LKR 29,500

This price is competitive compared to global posture correction solutions and offers a locally relevant, user-friendly alternative with added comfort and proactive feedback.

7.3 Cost Reduction Potential and Future Scalability

As we transition to scalable production, the following optimizations are identified:

- **Bulk Sourcing:** Significant cost reduction by sourcing components (FSRs, batteries, PCBs) in quantities of 100+ units.
- **Pre-fabricated Enclosures:** Leveraging off-the-shelf cushion molds or partnering with local manufacturers to reduce fabrication time and cost.
- **Power Optimization:** Switching to a single-cell LiPo battery with efficient charging circuitry can lower both cost and complexity.

7.4 Optimized Bill of Materials (For Future Batch Production)

Category	Estimated Cost (LKR)
Custom PCB + Components	3,000
8x FSRs (bulk rate)	5,000
Ultrasonic Sensor	195
Enclosure (prefab/plastic mold)	1,500
Cushion (bulk foam)	2,000
Battery + USB Charging Circuit	800
Vibration Motor	200
Assembly and Miscellaneous	1,500
Total (Optimized)	**13,195 – 14,000**

Table 2: Estimated Cost per Unit for Batch Production

7.5 Market-Aligned Price for Future Launch

With optimized production and bulk sourcing, the projected cost per unit can be brought down to **LKR 13,000 – 15,000**. This enables a feasible market entry price below **LKR 20,000**, making the product accessible to students, office workers, and health-conscious individuals — our primary target market.

8 Future Improvements

As we continue to refine and scale **P.A.P.A.Y.A**, several key improvements are planned to enhance user experience, increase accuracy, and expand product functionality. These upgrades aim to position the product as a leading-edge smart health device in the ergonomic tech space.

- **Machine Learning Integration:** Implementation of personalized posture correction models using machine learning algorithms to adapt to individual users' posture patterns. Over time, the system will learn user behavior and provide increasingly accurate feedback and predictions.
- **Mobile Application:** Development of a companion mobile app to visualize posture data, deliver real-time feedback, and generate weekly or monthly posture health reports. The app will also include progress tracking and recommendations for posture-improving exercises.
- **Antibacterial and Ergonomic Cushion Design:** Upgrading the cushion material to be both antibacterial and ergonomically enhanced, ensuring hygiene, durability, and greater comfort for long hours of use.

- **Sitting Time Tracker:** Integration of a timer feature to monitor total sitting time. Users will receive alerts when prolonged sitting is detected, encouraging them to take breaks and stretch.
- **Custom Alerts and Reminders:** Option to set personalized vibration alerts based on user schedules or work hours, optimizing posture correction with minimal disruption to daily tasks.
- **Cloud Sync and Data Backup:** Enabling data synchronization with cloud platforms for secure storage and access across devices, ensuring that long-term posture trends and improvements can be analyzed over months.

These enhancements will transform P.A.P.A.Y.A from a smart cushion into a full-fledged digital wellness platform.

9 Task Allocation Among Members

The development of **P.A.P.A.Y.A** was a team effort, with each member contributing to both the technical and conceptual aspects of the project. The table below summarizes the responsibilities and contributions of each team member.

Colombage D.M.

- Planned the algorithm for the ATmega328P-PU microcontroller and developed the corresponding logic.
- Designed the battery level indicator, including planning and assembling the power unit.
- Contributed to circuit testing.
- Participated in ideation, user research, and analysis.

Imbulpitiya B.N.

- Designed and simulated the circuit.
- Designed the PCB layout.
- Carried out soldering and assembly.
- Developed the algorithm and programmed the ATmega328P-PU microcontroller.
- Participated in ideation, user research, and analysis.

Rahman M.F.A.

- Designed two enclosures (main PCB and battery module holder) using SolidWorks.
- Designed the main seat cover of the product.
- Contributed to circuit testing and implementation.
- Participated in ideation, user research, and analysis.

Keerawella K.P.C.P.

- Contributed to circuit testing and implementation.
- Performed soldering and hardware assembly.
- Designed the battery level indicator, including planning and assembling the power unit
- Participated in ideation, user research, and analysis.