Versal Evaluation Platform

AECG
2100 LOGIC DRIVE
SAN JOSE CA

PAGE: **001 Title Page**

PAGE NUMBER: **1** OF **108**

DOC NO: **038-05005-01**

DATE: **Thursday, June 22, 2023** REV: **13**

SKU: **VCK190**

CONFIDENTIAL AND PROPRIETARY TO ADVANCED MICRO DEVICES INC.

© 2021 Advanced Micro Devices

This AMD Board schematic and design is the exclusive property of AMD, and is provided only to entities under a non-disclosure agreement with AMD for evaluation purposes. Further distribution or disclosure is strictly prohibited. Use of this schematic and design for any purpose other than evaluation requires a Board Technology License Agreement with AMD. AMD makes no representations or warranties of any kind regarding this schematic and design, including, not limited to, any implied warranty of merchantability or fitness for a particular purpose, and disclaims responsibility for any consequences resulting from use of the information included herein.

TITLE:**VCK190/VMK180**

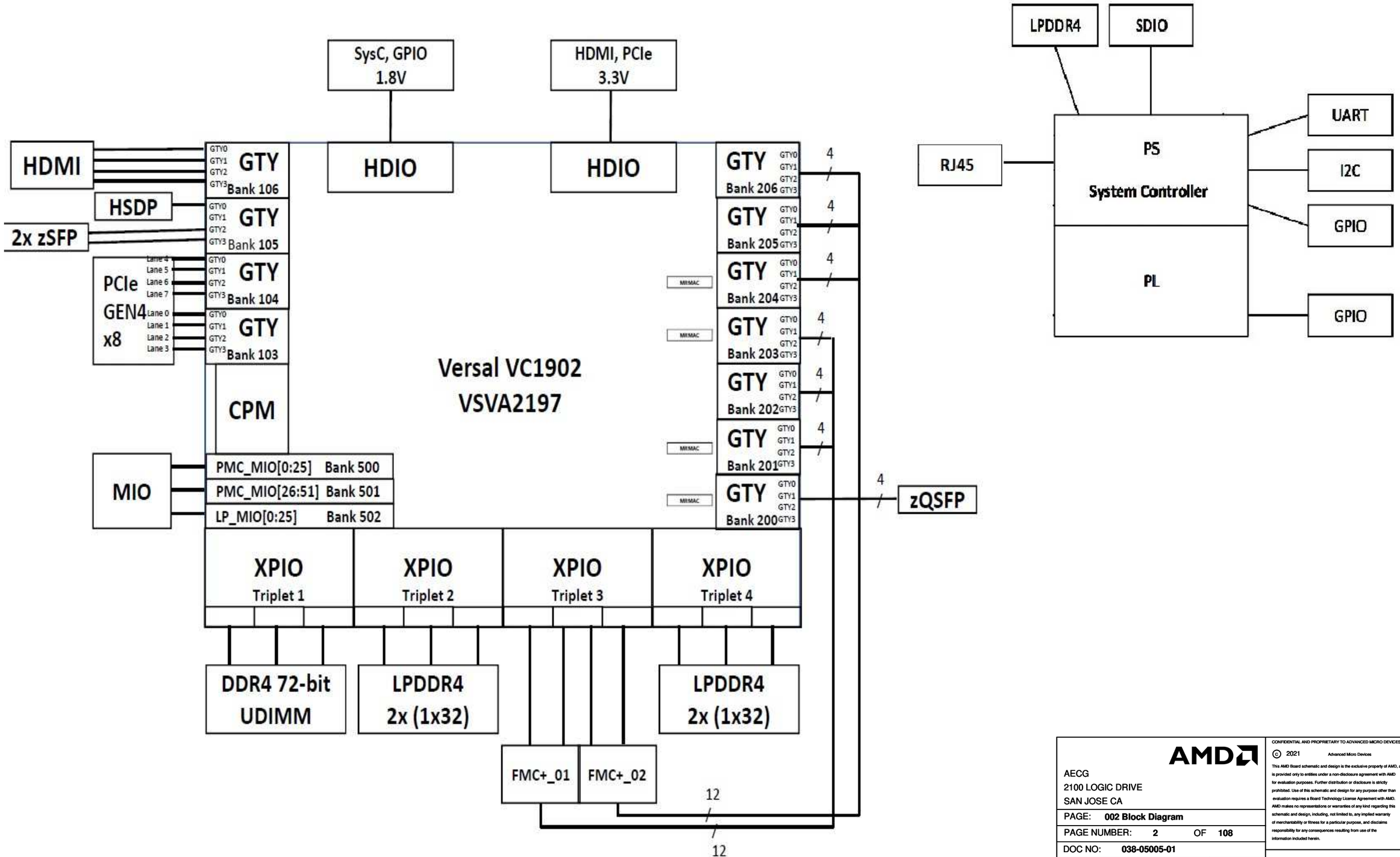

AECG
2100 LOGIC DRIVE
SAN JOSE CA

PAGE:	002 Block Diagram
PAGE NUMBER:	2 OF 108
DOC NO:	038-05005-01
DATE: Thursday, June 22, 2023	REV: 13
SKU: VCK190	

CONFIDENTIAL AND PROPRIETARY TO ADVANCED MICRO DEVICES INC.
© 2021 Advanced Micro Devices
This AMD Board schematic and design is the exclusive property of AMD, and is provided only to entities under a non-disclosure agreement with AMD for evaluation purposes. Further distribution or disclosure is strictly prohibited. Use of this schematic and design for any purpose other than evaluation requires a Board Technology License Agreement with AMD. AMD makes no representations or warranties of any kind regarding this schematic and design, including, not limited to, any implied warranty of merchantability or fitness for a particular purpose, and disclaims responsibility for any consequences resulting from use of the information included herein.

TITLE: VCK190/VMK180

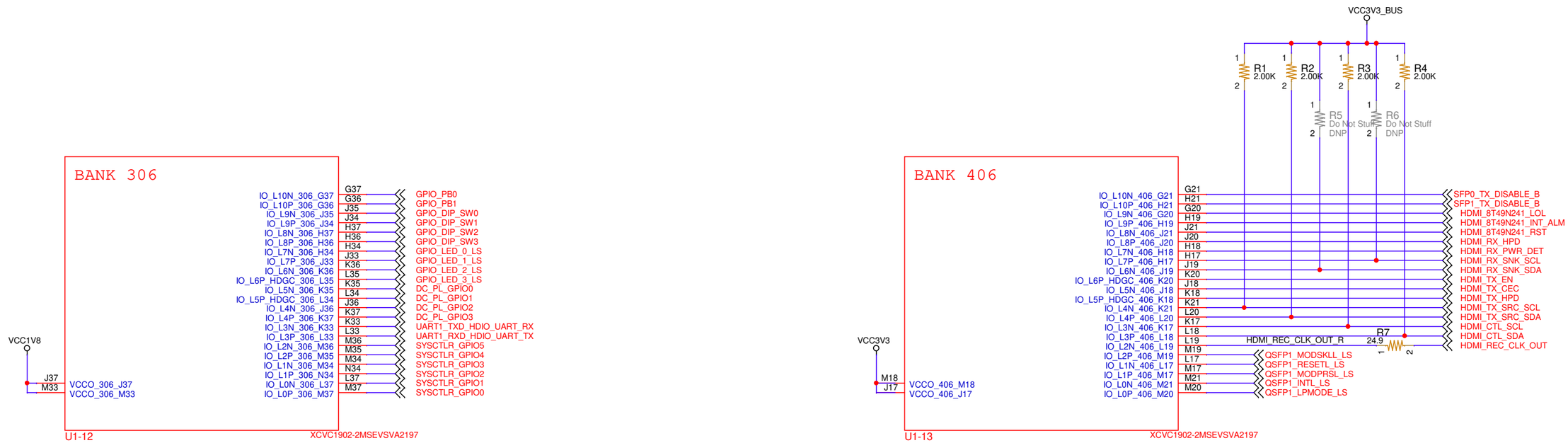

AECG
2100 LOGIC DRIVE
SAN JOSE CA

PAGE: **003 Versal Banks 306 406**

PAGE NUMBER: **3** OF **108**

DOC NO: **038-05005-01**

DATE: **Thursday, June 22, 2023** REV: **13**

SKU: **VCK190**

CONFIDENTIAL AND PROPRIETARY TO ADVANCED MICRO DEVICES INC.
© 2021 Advanced Micro Devices
This AMD Board schematic and design is the exclusive property of AMD, and is provided only to entities under a non-disclosure agreement with AMD for evaluation purposes. Further distribution or disclosure is strictly prohibited. Use of this schematic and design for any purpose other than evaluation requires a Board Technology License Agreement with AMD. AMD makes no representations or warranties of any kind regarding this schematic and design, including, not limited to, any implied warranty of merchantability or fitness for a particular purpose, and disclaims responsibility for any consequences resulting from use of the information included herein.

TITLE: **VCK190/VMK180**

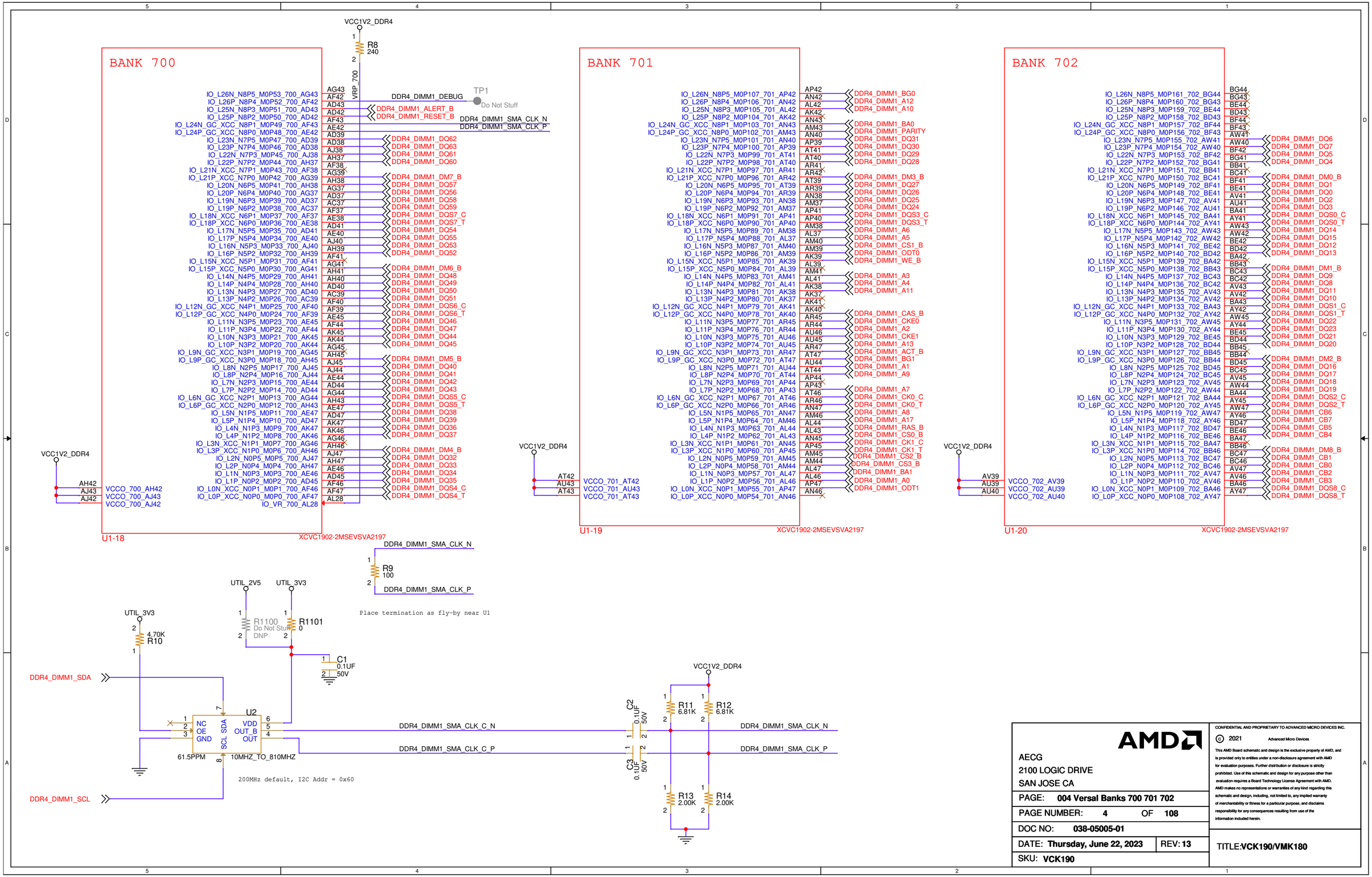

AECG
2100 LOGIC DRIVE
SAN JOSE CA

PAGE:	004 Versal Banks 700 701 702
PAGE NUMBER:	4 OF 108
DOC NO:	038-05005-01
DATE: Thursday, June 22, 2023	REV: 13
SKU: VCK190	

CONFIDENTIAL AND PROPRIETARY TO ADVANCED MICRO DEVICES INC.
© 2021 Advanced Micro Devices
This AMD Board schematic and design is the exclusive property of AMD, and is provided only to entities under a non-disclosure agreement with AMD for evaluation purposes. Further distribution or disclosure is strictly prohibited. Use of this schematic and design for any purpose other than evaluation requires a Board Technology License Agreement with AMD. AMD makes no representations or warranties of any kind regarding this schematic and design, including, not limited to, any implied warranty of merchantability or fitness for a particular purpose, and disclaims responsibility for any consequences resulting from use of the information included herein.

TITLE: VCK190/VMK180

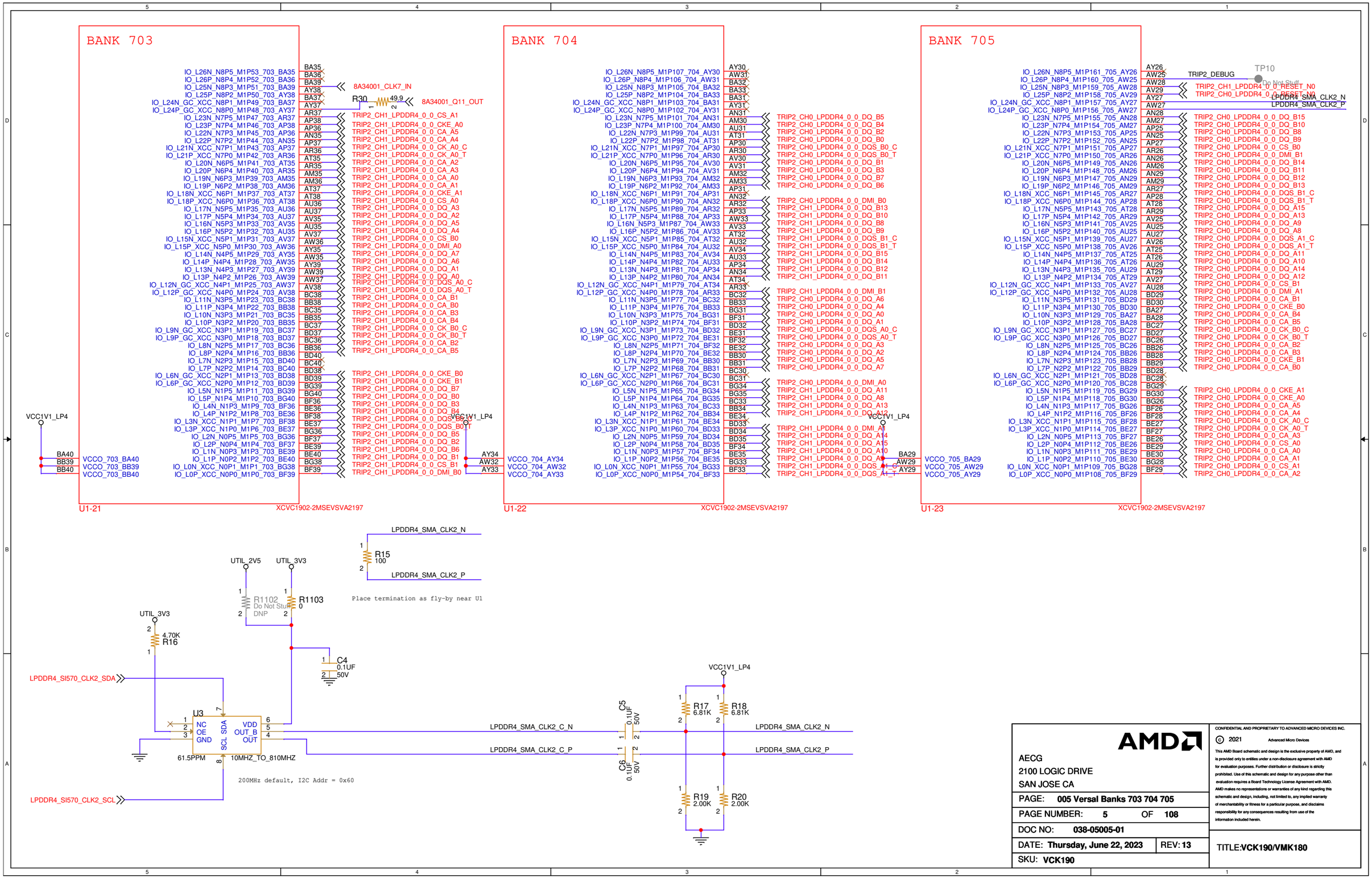

AMD

AECG
2100 LOGIC DRIVE
SAN JOSE CA

PAGE: **005 Versal Banks 703 704 705**

PAGE NUMBER: **5** OF **108**

DOC NO: **038-05005-01**

DATE: **Thursday, June 22, 2023** REV: **13**

SKU: **VCK190**

TITLE: **VCK190/VMK180**

CONFIDENTIAL AND PROPRIETARY TO ADVANCED MICRO DEVICES INC.

© 2021 Advanced Micro Devices

This AMD Board schematic and design is the exclusive property of AMD, and is provided only to entities under a non-disclosure agreement with AMD for evaluation purposes. Further distribution or disclosure is strictly prohibited. Use of this schematic and design for any purpose other than evaluation requires a Board Technology License Agreement with AMD. AMD makes no representations or warranties of any kind regarding this schematic and design, including, not limited to, any implied warranty of merchantability or fitness for a particular purpose, and disclaims responsibility for any consequences resulting from use of the information included herein.

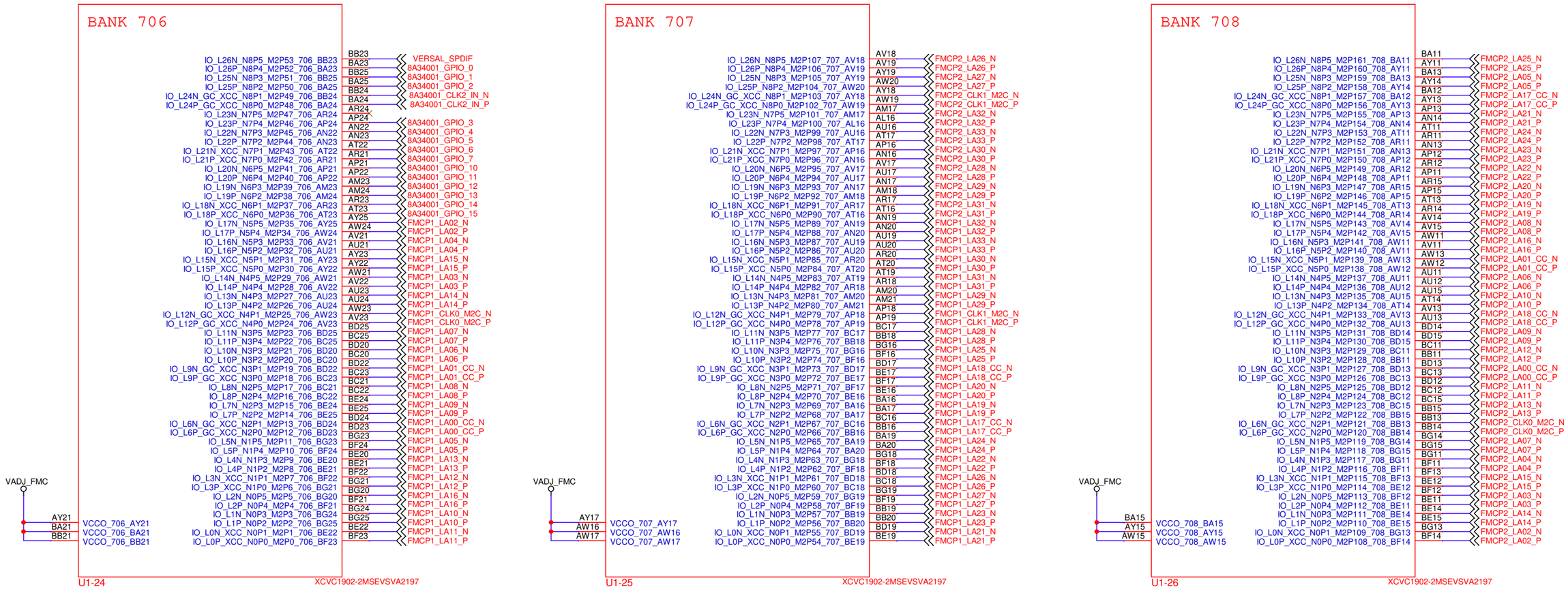

AMD

AECG
2100 LOGIC DRIVE
SAN JOSE CA

PAGE:	**006 Versal Banks 706 707 708**
PAGE NUMBER:	**6** OF **108**
DOC NO:	**038-05005-01**
DATE: **Thursday, June 22, 2023**	REV: **13**
SKU: **VCK190**	

CONFIDENTIAL AND PROPRIETARY TO ADVANCED MICRO DEVICES INC.
© 2021 Advanced Micro Devices
This AMD Board schematic and design is the exclusive property of AMD, and is provided only to entities under a non-disclosure agreement with AMD for evaluation purposes. Further distribution or disclosure is strictly prohibited. Use of this schematic and design for any purpose other than evaluation requires a Board Technology License Agreement with AMD. AMD makes no representations or warranties of any kind regarding this schematic and design, including, not limited to, any implied warranty of merchantability or fitness for a particular purpose, and disclaims responsibility for any consequences resulting from use of the information included herein.

TITLE: **VCK190/VMK180**

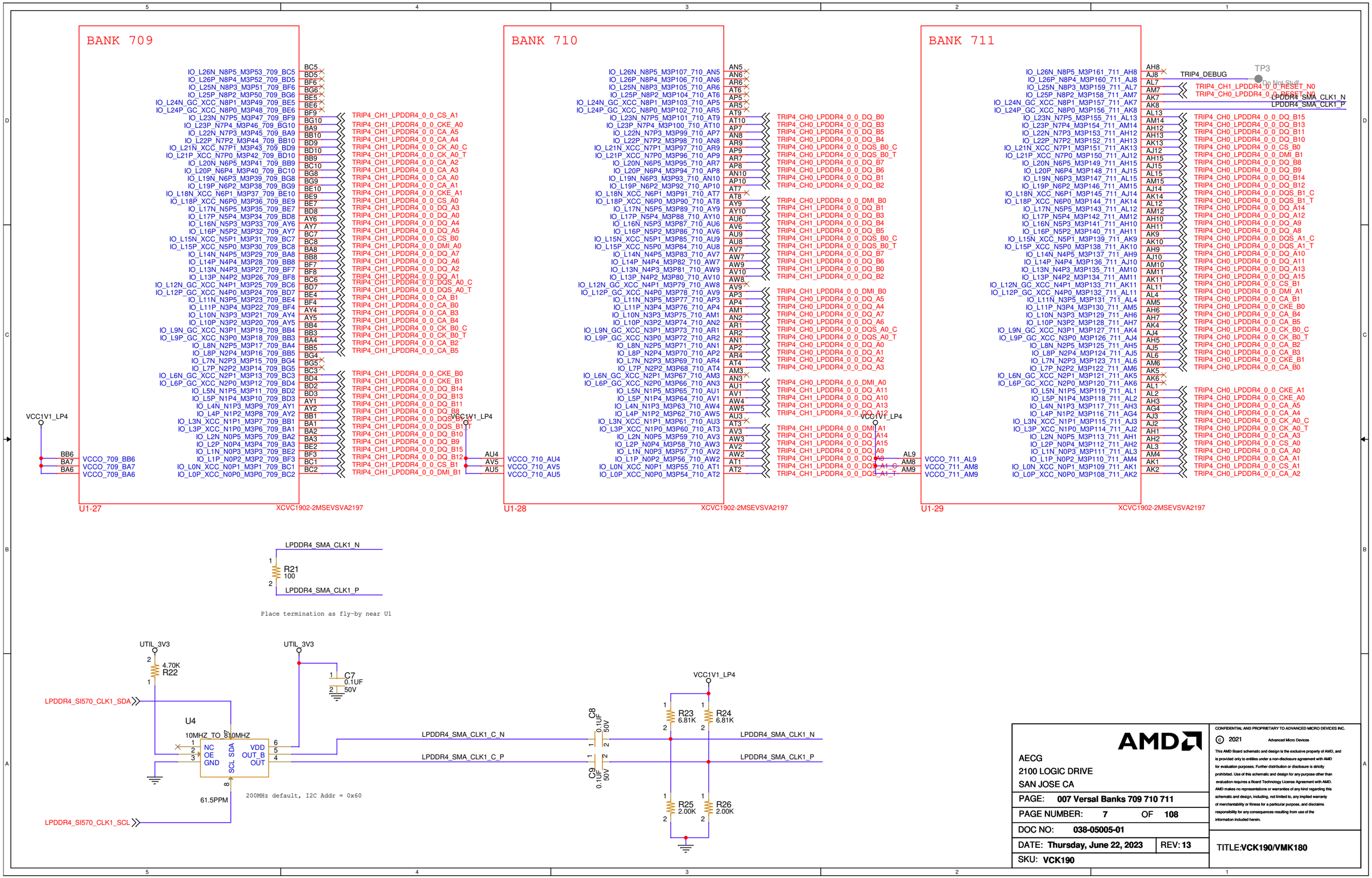

AMD

AECG
2100 LOGIC DRIVE
SAN JOSE CA

PAGE: **007 Versal Banks 709 710 711**

PAGE NUMBER: **7** OF **108**

DOC NO: **038-05005-01**

DATE: **Thursday, June 22, 2023** REV: **13**

SKU: **VCK190**

CONFIDENTIAL AND PROPRIETARY TO ADVANCED MICRO DEVICES INC.

© 2021 Advanced Micro Devices

This AMD Board schematic and design is the exclusive property of AMD, and is provided only to entities under a non-disclosure agreement with AMD for evaluation purposes. Further distribution or disclosure is strictly prohibited. Use of this schematic and design for any purpose other than evaluation requires a Board Technology License Agreement with AMD. AMD makes no representations or warranties of any kind regarding this schematic and design, including, not limited to, any implied warranty of merchantability or fitness for a particular purpose, and disclaims responsibility for any consequences resulting from use of the information included herein.

TITLE: **VCK190/VMK180**

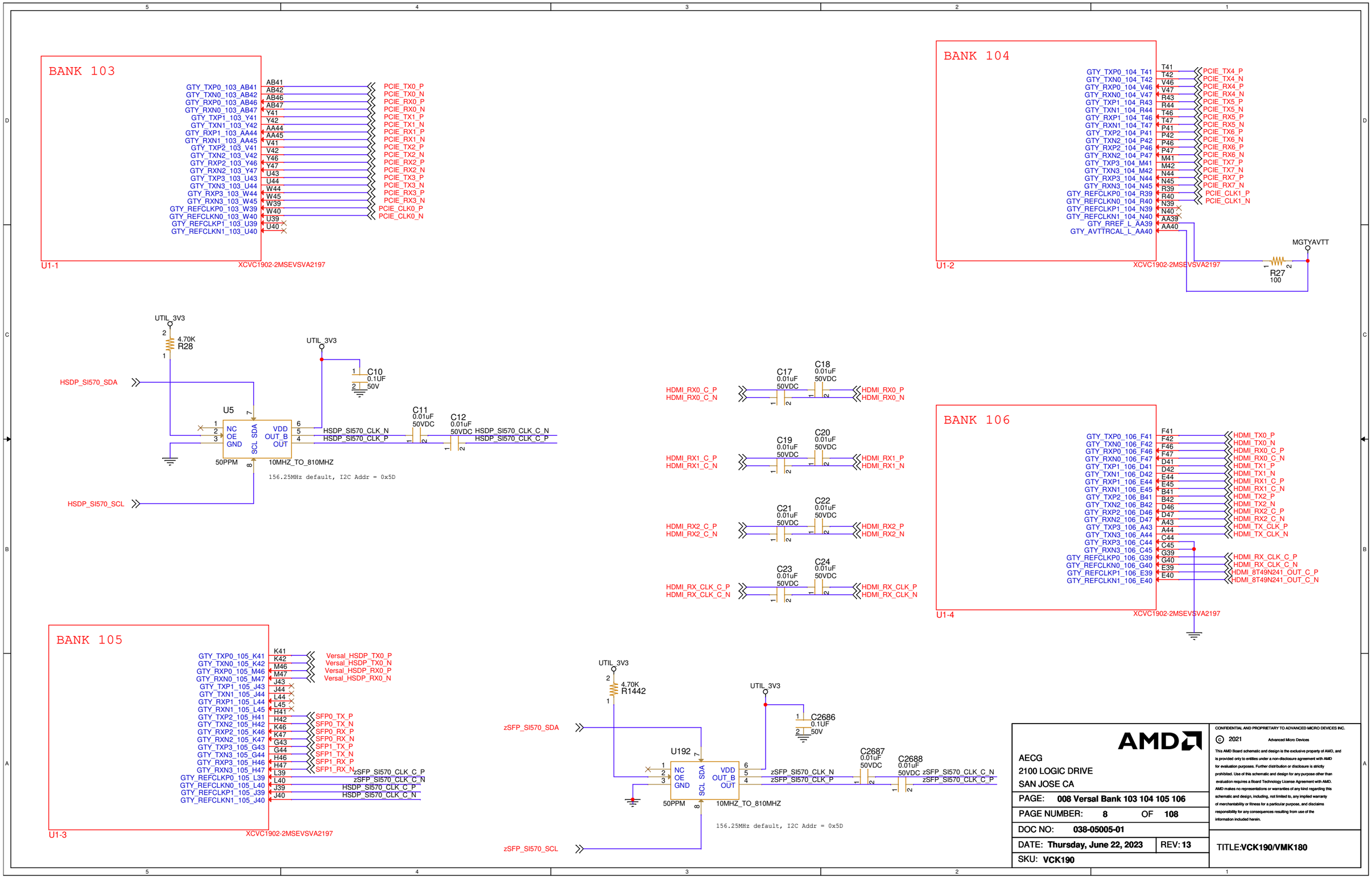
BANK 103
GTY_TXP0_103_AB41 AB41 PCIE_TX0_P
GTY_TXN0_103_AB42 AB42 PCIE_TX0_N
GTY_RXP0_103_AB46 AB46 PCIE_RX0_P
GTY_RXN0_103_AB47 AB47 PCIE_RX0_N
GTY_TXP1_103_Y41 Y41 PCIE_TX1_P
GTY_TXN1_103_Y42 Y42 PCIE_TX1_N
GTY_RXP1_103_AA44 AA44 PCIE_RX1_P
GTY_RXN1_103_AA45 AA45 PCIE_RX1_N
GTY_TXP2_103_V41 V41 PCIE_TX2_P
GTY_TXN2_103_V42 V42 PCIE_TX2_N
GTY_RXP2_103_Y46 Y46 PCIE_RX2_P
GTY_RXN2_103_Y47 Y47 PCIE_RX2_N
GTY_TXP3_103_U43 U43 PCIE_TX3_P
GTY_TXN3_103_U44 U44 PCIE_TX3_N
GTY_RXP3_103_W44 W44 PCIE_RX3_P
GTY_RXN3_103_W45 W45 PCIE_RX3_N
GTY_REFCLKP0_103_W39 W39 PCIE_CLK0_P
GTY_REFCLKN0_103_W40 W40 PCIE_CLK0_N
GTY_REFCLKP1_103_U39 U39
GTY_REFCLKN1_103_U40 U40
U1-1
XCVC1902-2MSEVSVA2197
BANK 104
GTY_TXP0_104_T41 T41 PCIE_TX4_P
GTY_TXN0_104_T42 T42 PCIE_TX4_N
GTY_RXP0_104_V46 V46 PCIE_RX4_P
GTY_RXN0_104_V47 V47 PCIE_RX4_N
GTY_TXP1_104_R43 R43 PCIE_TX5_P
GTY_TXN1_104_R44 R44 PCIE_TX5_N
GTY_RXP1_104_T46 T46 PCIE_RX5_P
GTY_RXN1_104_T47 T47 PCIE_RX5_N
GTY_TXP2_104_P41 P41 PCIE_TX6_P
GTY_TXN2_104_P42 P42 PCIE_TX6_N
GTY_RXP2_104_P46 P46 PCIE_RX6_P
GTY_RXN2_104_P47 P47 PCIE_RX6_N
GTY_TXP3_104_M41 M41 PCIE_TX7_P
GTY_TXN3_104_M42 M42 PCIE_TX7_N
GTY_RXP3_104_N44 N44 PCIE_RX7_P
GTY_RXN3_104_N45 N45 PCIE_RX7_N
GTY_REFCLKP0_104_R39 R39 PCIE_CLK1_P
GTY_REFCLKN0_104_R40 R40 PCIE_CLK1_N
GTY_REFCLKP1_104_N39 N39
GTY_REFCLKN1_104_N40 N40
GTY_RREF_L_AA39 AA39
GTY_AVTTRCAL_L_AA40 AA40
MGTYAVTT
R27
100
U1-2
XCVC1902-2MSEVSVA2197
UTIL_3V3
4.70K
R28
HSDP_SI570_SDA
HSDP_SI570_SCL
U5
NC
OE
GND
SCL SDA
VDD
OUT_B
OUT
50PPM
10MHZ_TO_810MHZ
156.25MHz default, I2C Addr = 0x5D
C10
0.1UF
50V
C11
0.01uF
50VDC
C12
0.01uF
50VDC
HSDP_SI570_CLK_N
HSDP_SI570_CLK_P
HSDP_SI570_CLK_C_N
HSDP_SI570_CLK_C_P
C17 0.01uF 50VDC
C18 0.01uF 50VDC
HDMI_RX0_C_P
HDMI_RX0_C_N
HDMI_RX0_P
HDMI_RX0_N
C19 0.01uF 50VDC
C20 0.01uF 50VDC
HDMI_RX1_C_P
HDMI_RX1_C_N
HDMI_RX1_P
HDMI_RX1_N
C21 0.01uF 50VDC
C22 0.01uF 50VDC
HDMI_RX2_C_P
HDMI_RX2_C_N
HDMI_RX2_P
HDMI_RX2_N
C23 0.01uF 50VDC
C24 0.01uF 50VDC
HDMI_RX_CLK_C_P
HDMI_RX_CLK_C_N
HDMI_RX_CLK_P
HDMI_RX_CLK_N
BANK 106
GTY_TXP0_106_F41 F41 HDMI_TX0_P
GTY_TXN0_106_F42 F42 HDMI_TX0_N
GTY_RXP0_106_F46 F46 HDMI_RX0_C_P
GTY_RXN0_106_F47 F47 HDMI_RX0_C_N
GTY_TXP1_106_D41 D41 HDMI_TX1_P
GTY_TXN1_106_D42 D42 HDMI_TX1_N
GTY_RXP1_106_E44 E44 HDMI_RX1_C_P
GTY_RXN1_106_E45 E45 HDMI_RX1_C_N
GTY_TXP2_106_B41 B41 HDMI_TX2_P
GTY_TXN2_106_B42 B42 HDMI_TX2_N
GTY_RXP2_106_D46 D46 HDMI_RX2_C_P
GTY_RXN2_106_D47 D47 HDMI_RX2_C_N
GTY_TXP3_106_A43 A43 HDMI_TX_CLK_P
GTY_TXN3_106_A44 A44 HDMI_TX_CLK_N
GTY_RXP3_106_C44 C44
GTY_RXN3_106_C45 C45
GTY_REFCLKP0_106_G39 G39 HDMI_RX_CLK_C_P
GTY_REFCLKN0_106_G40 G40 HDMI_RX_CLK_C_N
GTY_REFCLKP1_106_E39 E39 HDMI_8T49N241_OUT_C_P
GTY_REFCLKN1_106_E40 E40 HDMI_8T49N241_OUT_C_N
U1-4
XCVC1902-2MSEVSVA2197
BANK 105
GTY_TXP0_105_K41 K41 Versal_HSDP_TX0_P
GTY_TXN0_105_K42 K42 Versal_HSDP_TX0_N
GTY_RXP0_105_M46 M46 Versal_HSDP_RX0_P
GTY_RXN0_105_M47 M47 Versal_HSDP_RX0_N
GTY_TXP1_105_J43 J43
GTY_TXN1_105_J44 J44
GTY_RXP1_105_L44 L44
GTY_RXN1_105_L45 L45
GTY_TXP2_105_H41 H41 SFP0_TX_P
GTY_TXN2_105_H42 H42 SFP0_TX_N
GTY_RXP2_105_K46 K46 SFP0_RX_P
GTY_RXN2_105_K47 K47 SFP0_RX_N
GTY_TXP3_105_G43 G43 SFP1_TX_P
GTY_TXN3_105_G44 G44 SFP1_TX_N
GTY_RXP3_105_H46 H46 SFP1_RX_P
GTY_RXN3_105_H47 H47 SFP1_RX_N
GTY_REFCLKP0_105_L39 L39 zSFP_SI570_CLK_C_P
GTY_REFCLKN0_105_L40 L40 zSFP_SI570_CLK_C_N
GTY_REFCLKP1_105_J39 J39 HSDP_SI570_CLK_C_P
GTY_REFCLKN1_105_J40 J40 HSDP_SI570_CLK_C_N
U1-3
XCVC1902-2MSEVSVA2197
UTIL_3V3
4.70K
R1442
zSFP_SI570_SDA
zSFP_SI570_SCL
U192
NC
OE
GND
SCL SDA
VDD
OUT_B
OUT
50PPM
10MHZ_TO_810MHZ
156.25MHz default, I2C Addr = 0x5D
C2686
0.1UF
50V
C2687
0.01uF
50VDC
C2688
0.01uF
50VDC
zSFP_SI570_CLK_N
zSFP_SI570_CLK_P
zSFP_SI570_CLK_C_N
zSFP_SI570_CLK_C_P
AMD
AECG
2100 LOGIC DRIVE
SAN JOSE CA
PAGE: 008 Versal Bank 103 104 105 106
PAGE NUMBER: 8 OF 108
DOC NO: 038-05005-01
DATE: Thursday, June 22, 2023
REV: 13
SKU: VCK190
CONFIDENTIAL AND PROPRIETARY TO ADVANCED MICRO DEVICES INC.
© 2021 Advanced Micro Devices
This AMD Board schematic and design is the exclusive property of AMD, and is provided only to entities under a non-disclosure agreement with AMD for evaluation purposes. Further distribution or disclosure is strictly prohibited. Use of this schematic and design for any purpose other than evaluation requires a Board Technology License Agreement with AMD. AMD makes no representations or warranties of any kind regarding this schematic and design, including, not limited to, any implied warranty of merchantability or fitness for a particular purpose, and disclaims responsibility for any consequences resulting from use of the information included herein.
TITLE:VCK190/VMK180

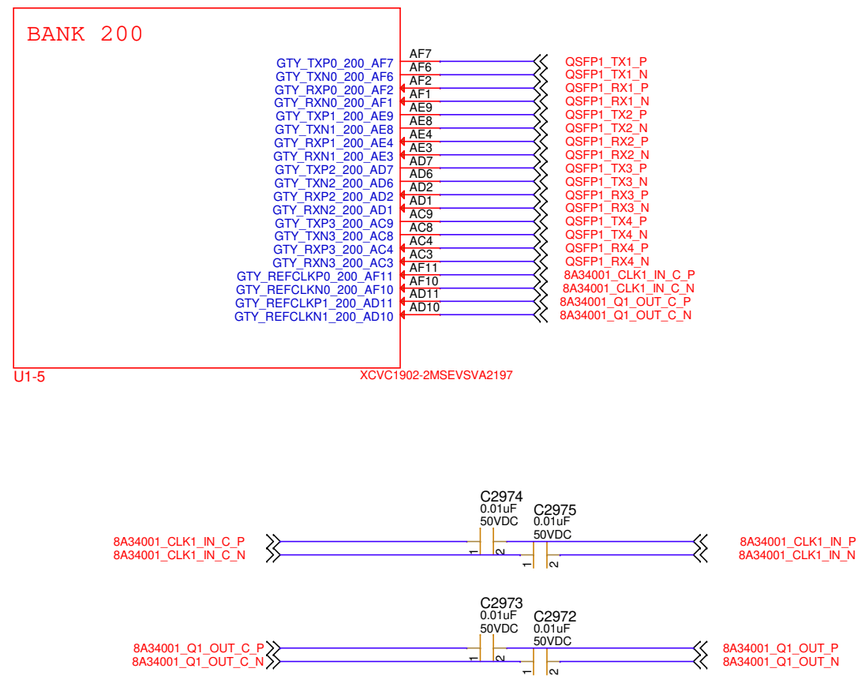

AECG
2100 LOGIC DRIVE
SAN JOSE CA

PAGE: **009 Versal Bank 200**

PAGE NUMBER: **9** OF **108**

DOC NO: **038-05005-01**

DATE: **Thursday, June 22, 2023** REV: **13**

SKU: **VCK190**

CONFIDENTIAL AND PROPRIETARY TO ADVANCED MICRO DEVICES INC.

© 2021 Advanced Micro Devices

This AMD Board schematic and design is the exclusive property of AMD, and is provided only to entities under a non-disclosure agreement with AMD for evaluation purposes. Further distribution or disclosure is strictly prohibited. Use of this schematic and design for any purpose other than evaluation requires a Board Technology License Agreement with AMD. AMD makes no representations or warranties of any kind regarding this schematic and design, including, not limited to, any implied warranty of merchantability or fitness for a particular purpose, and disclaims responsibility for any consequences resulting from use of the information included herein.

TITLE: **VCK190/VMK180**

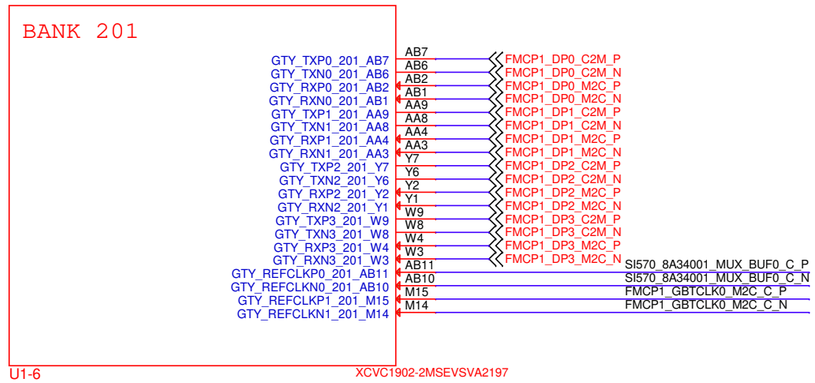

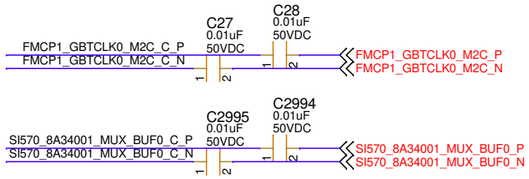

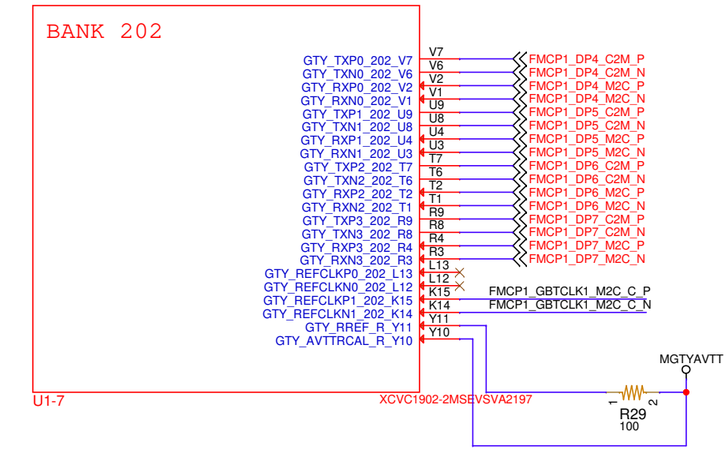

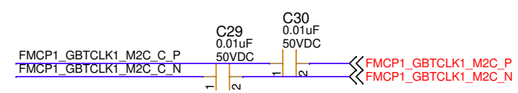

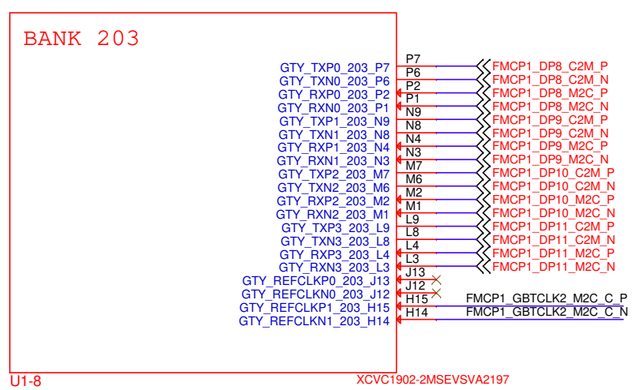

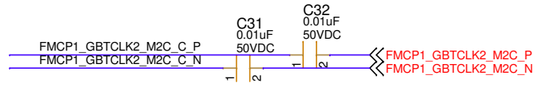

AECG
2100 LOGIC DRIVE
SAN JOSE CA

PAGE:	010 Versal Banks 201 202 203
PAGE NUMBER:	10 OF 108
DOC NO:	038-05005-01
DATE: Thursday, June 22, 2023	REV: 13
SKU: VCK190	

CONFIDENTIAL AND PROPRIETARY TO ADVANCED MICRO DEVICES INC.
© 2021 Advanced Micro Devices
This AMD Board schematic and design is the exclusive property of AMD, and is provided only to entities under a non-disclosure agreement with AMD for evaluation purposes. Further distribution or disclosure is strictly prohibited. Use of this schematic and design for any purpose other than evaluation requires a Board Technology License Agreement with AMD. AMD makes no representations or warranties of any kind regarding this schematic and design, including, not limited to, any implied warranty of merchantability or fitness for a particular purpose, and disclaims responsibility for any consequences resulting from use of the information included herein.

TITLE: VCK190/VMK180

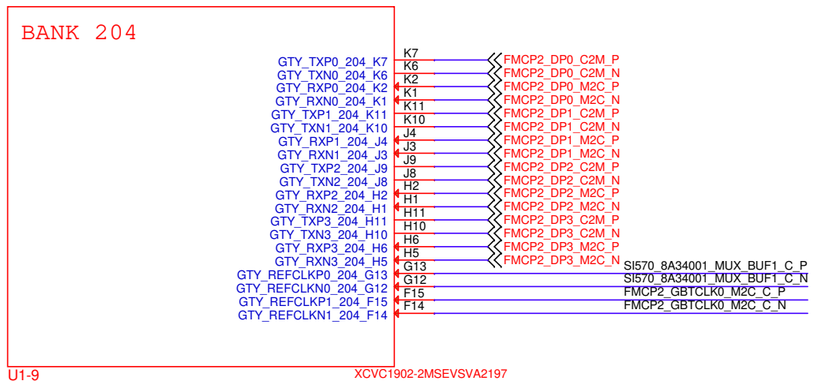

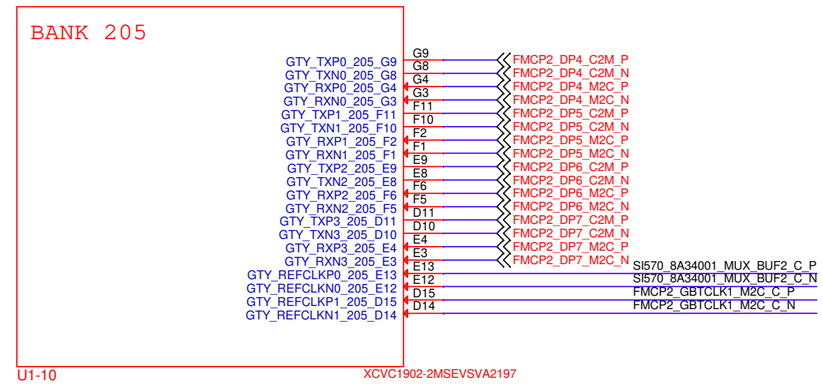

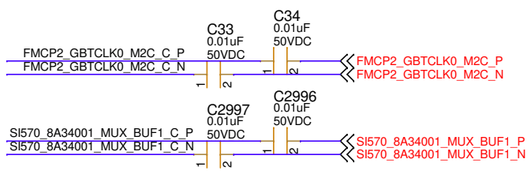

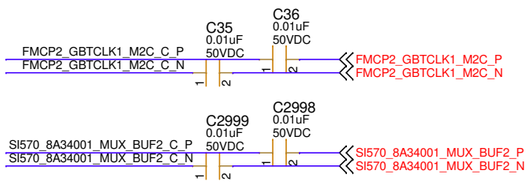

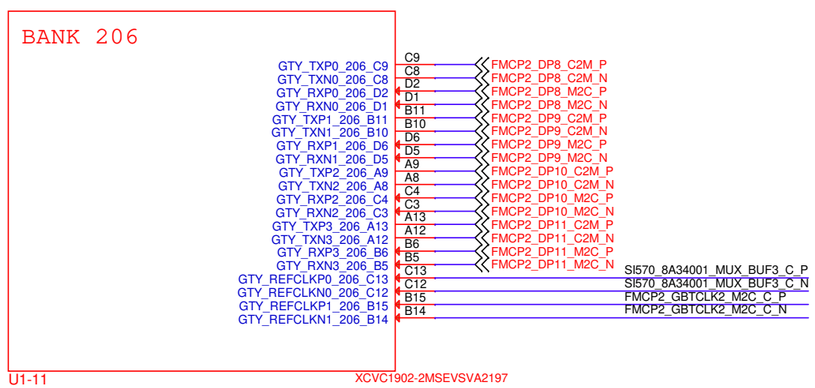

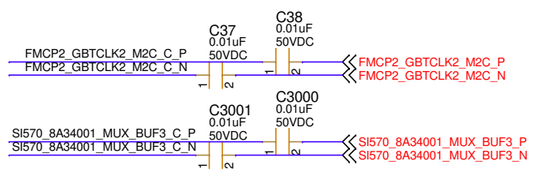

AMD

AECG
2100 LOGIC DRIVE
SAN JOSE CA

PAGE:	011 Versal Banks 204 205 206
PAGE NUMBER:	11 OF 108
DOC NO:	038-05005-01
DATE: Thursday, June 22, 2023	REV: 13
SKU: VCK190	

CONFIDENTIAL AND PROPRIETARY TO ADVANCED MICRO DEVICES INC.
© 2021 Advanced Micro Devices
This AMD Board schematic and design is the exclusive property of AMD, and is provided only to entities under a non-disclosure agreement with AMD for evaluation purposes. Further distribution or disclosure is strictly prohibited. Use of this schematic and design for any purpose other than evaluation requires a Board Technology License Agreement with AMD. AMD makes no representations or warranties of any kind regarding this schematic and design, including, not limited to, any implied warranty of merchantability or fitness for a particular purpose, and disclaims responsibility for any consequences resulting from use of the information included herein.

TITLE: VCK190/VMK180

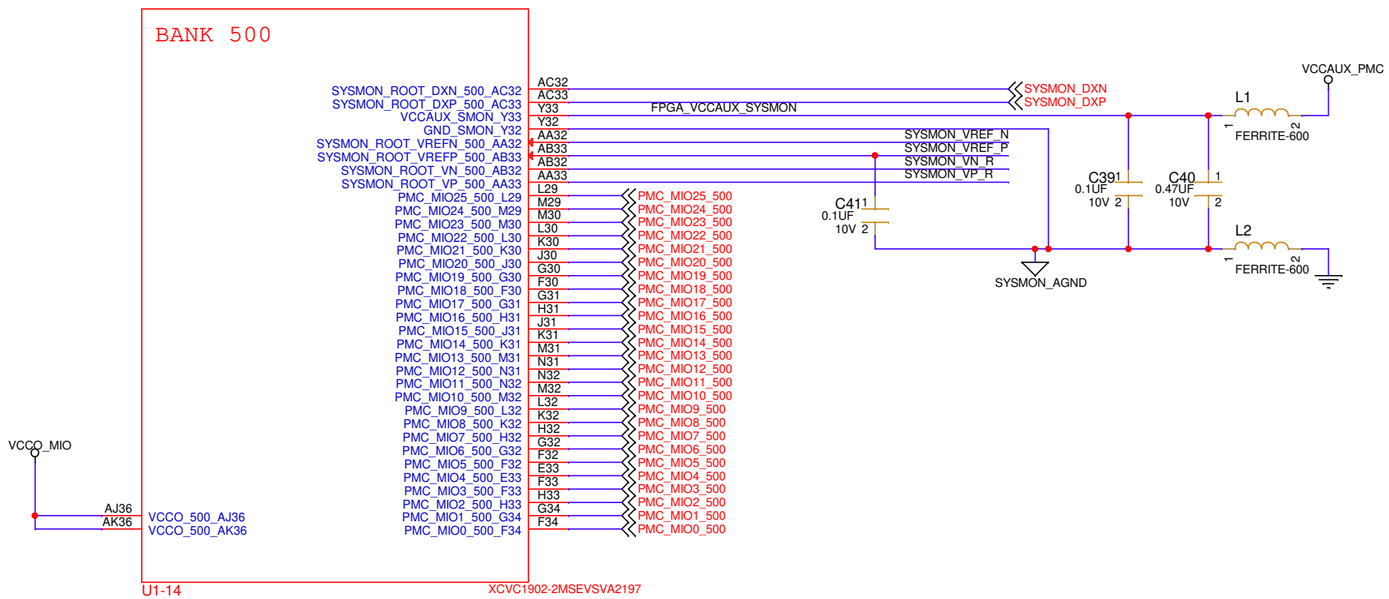

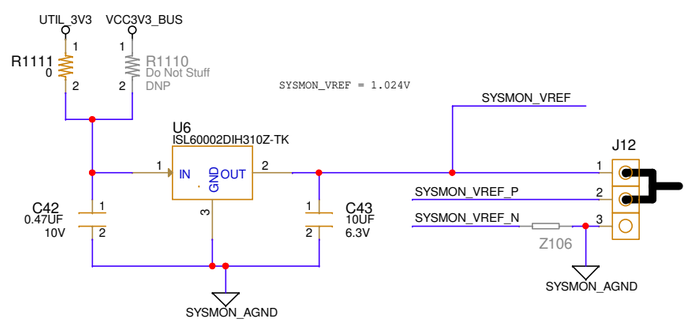

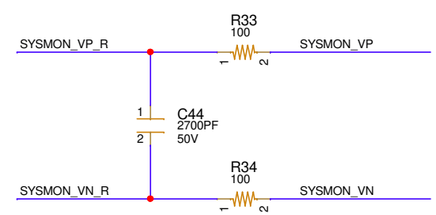

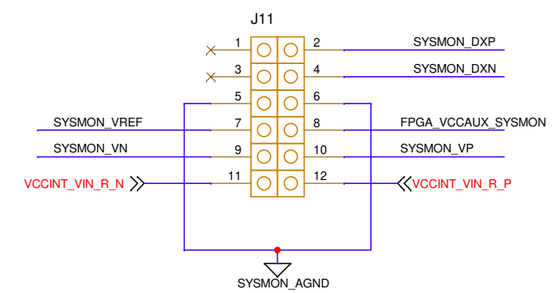

AECG
2100 LOGIC DRIVE
SAN JOSE CA

PAGE: **012 Versal Bank 500 MIO-SYSMON**

PAGE NUMBER: **12** OF **108**

DOC NO: **038-05005-01**

DATE: **Thursday, June 22, 2023** REV: **13**

SKU: **VCK190**

CONFIDENTIAL AND PROPRIETARY TO ADVANCED MICRO DEVICES INC.

© 2021 Advanced Micro Devices

This AMD Board schematic and design is the exclusive property of AMD, and is provided only to entities under a non-disclosure agreement with AMD for evaluation purposes. Further distribution or disclosure is strictly prohibited. Use of this schematic and design for any purpose other than evaluation requires a Board Technology License Agreement with AMD. AMD makes no representations or warranties of any kind regarding this schematic and design, including, not limited to, any implied warranty of merchantability or fitness for a particular purpose, and disclaims responsibility for any consequences resulting from use of the information included herein.

TITLE: **VCK190/VMK180**

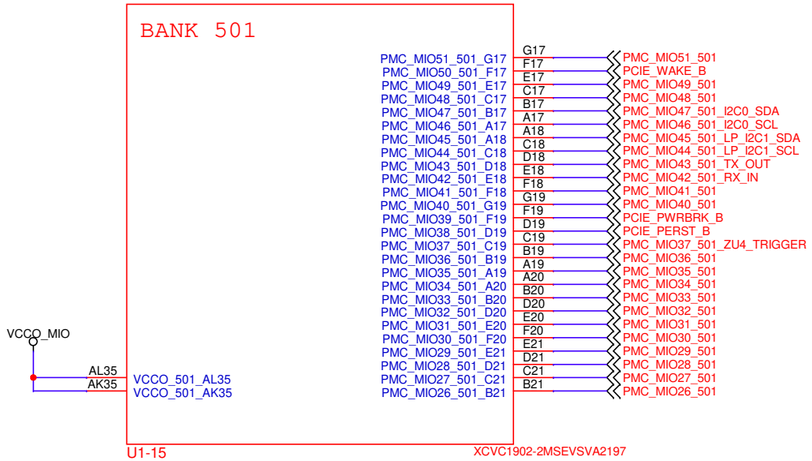

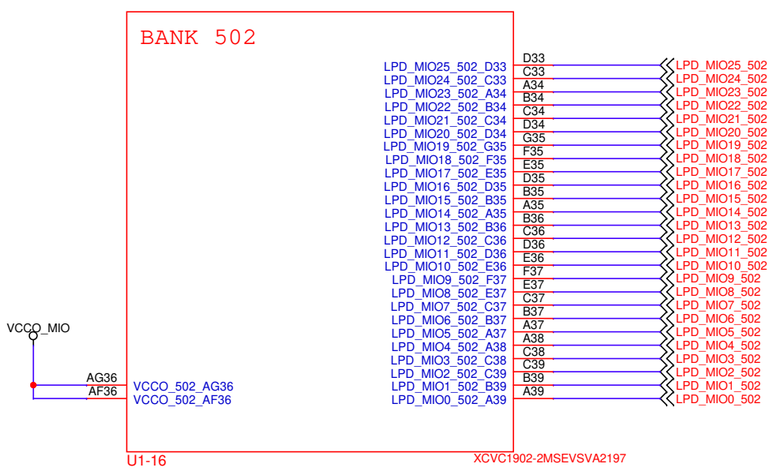

AECG
2100 LOGIC DRIVE
SAN JOSE CA

PAGE: **013 Versal Bank 501 502 - MIO**

PAGE NUMBER: **13** OF **108**

DOC NO: **038-05005-01**

DATE: **Thursday, June 22, 2023** REV: **13**

SKU: **VCK190**

CONFIDENTIAL AND PROPRIETARY TO ADVANCED MICRO DEVICES INC.

© 2021 Advanced Micro Devices

This AMD Board schematic and design is the exclusive property of AMD, and is provided only to entities under a non-disclosure agreement with AMD for evaluation purposes. Further distribution or disclosure is strictly prohibited. Use of this schematic and design for any purpose other than evaluation requires a Board Technology License Agreement with AMD. AMD makes no representations or warranties of any kind regarding this schematic and design, including, not limited to, any implied warranty of merchantability or fitness for a particular purpose, and disclaims responsibility for any consequences resulting from use of the information included herein.

TITLE: **VCK190/VMK180**

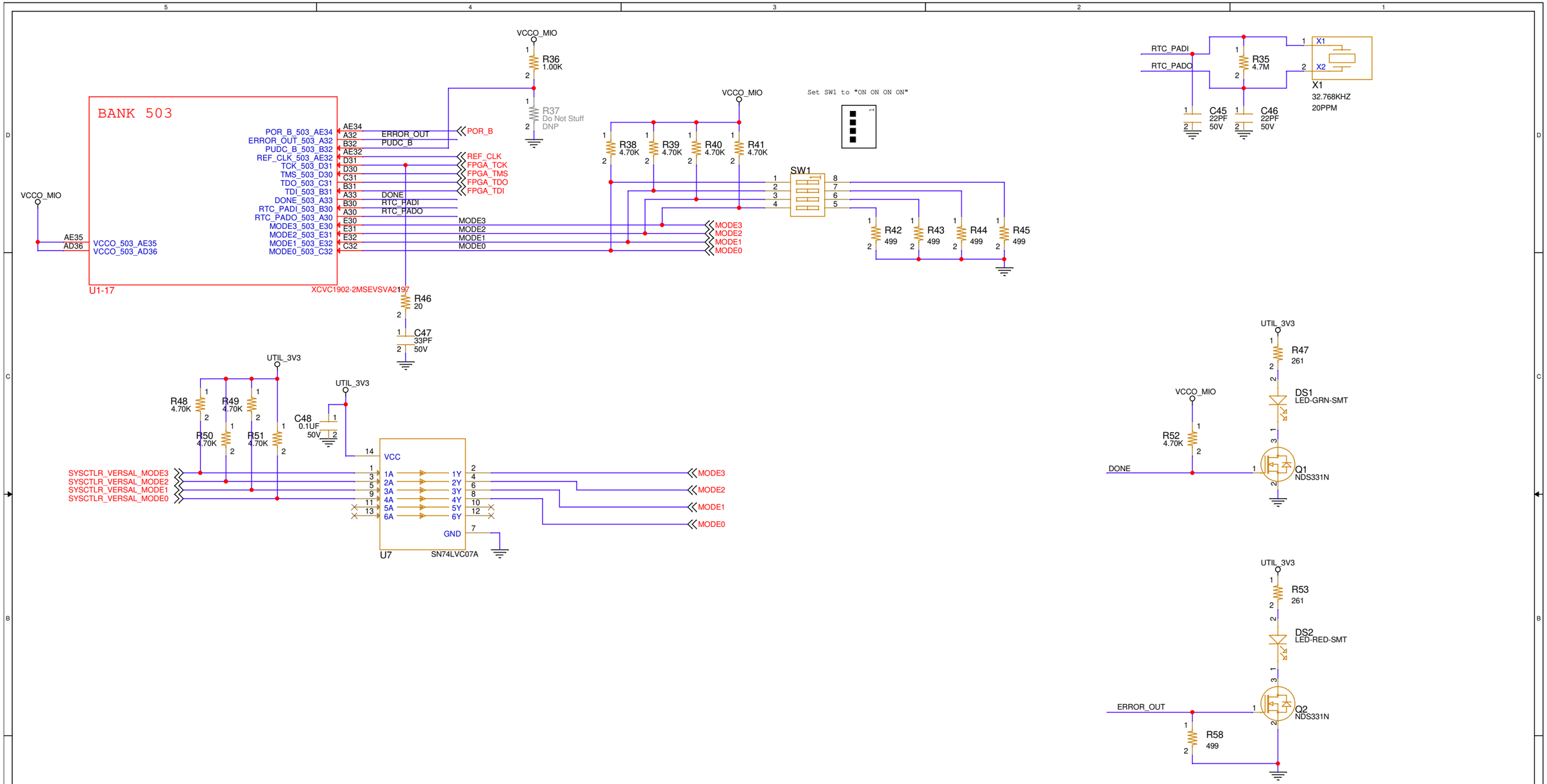

AECG
2100 LOGIC DRIVE
SAN JOSE CA

PAGE:	014 Versal Bank 503 - Config
PAGE NUMBER:	14 OF 108
DOC NO:	038-05005-01
DATE: Thursday, June 22, 2023	REV: 13
SKU: VCK190	

CONFIDENTIAL AND PROPRIETARY TO ADVANCED MICRO DEVICES INC.
© 2021 Advanced Micro Devices
This AMD Board schematic and design is the exclusive property of AMD, and is provided only to entities under a non-disclosure agreement with AMD for evaluation purposes. Further distribution or disclosure is strictly prohibited. Use of this schematic and design for any purpose other than evaluation requires a Board Technology License Agreement with AMD. AMD makes no representations or warranties of any kind regarding this schematic and design, including, not limited to, any implied warranty of merchantability or fitness for a particular purpose, and disclaims responsibility for any consequences resulting from use of the information included herein.

TITLE: VCK190/VMK180

1-2: VCCO_503 Sense (DEFAULT)
2-3: VCCAUX_PMC Sense

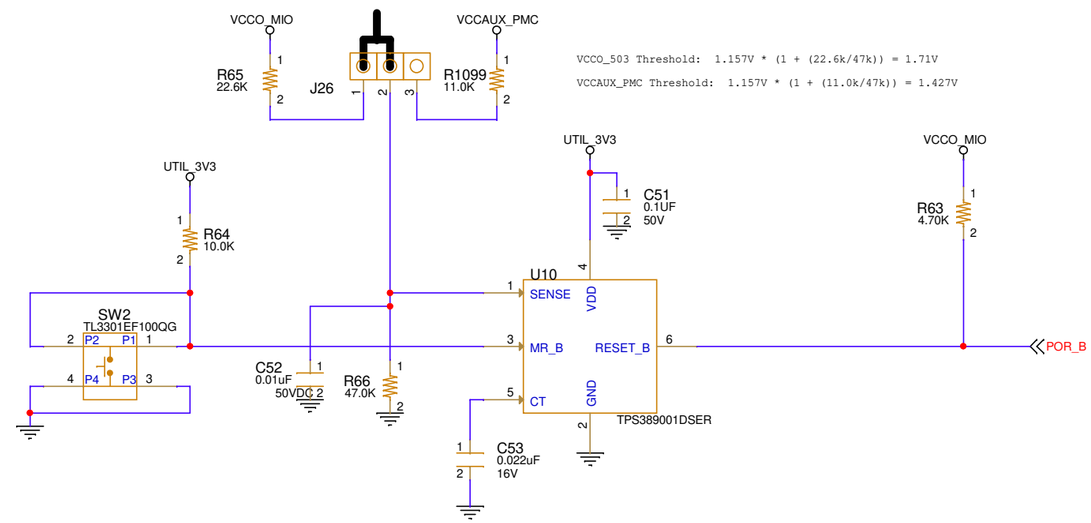

VCCO_503 Threshold: 1.157V * (1 + (22.6k/47k)) = 1.71V

VCCAUX_PMC Threshold: 1.157V * (1 + (11.0k/47k)) = 1.427V

Delay: 0.022 * 1.01 + 25us = 23.6ms

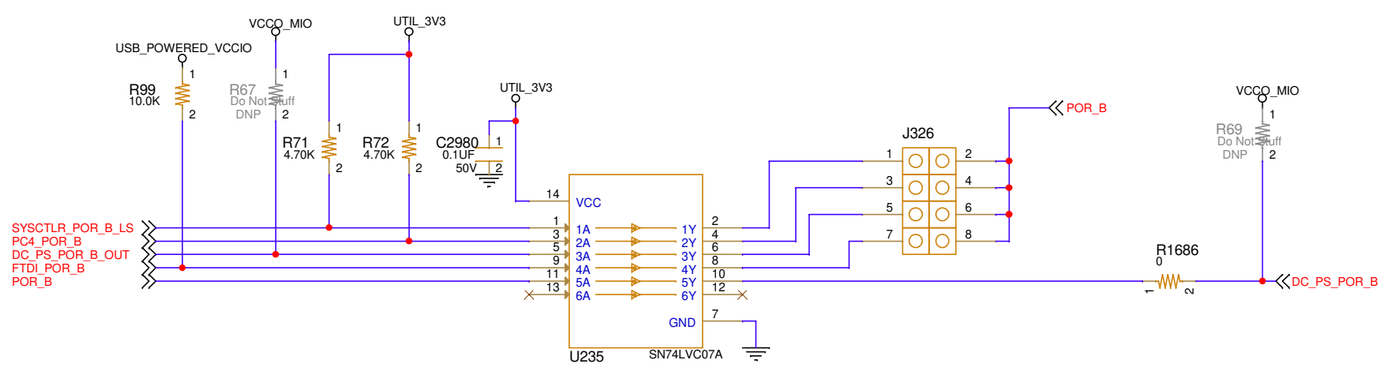

AMD

AECG
2100 LOGIC DRIVE
SAN JOSE CA

PAGE:	015 System Reset POR_B
PAGE NUMBER:	15 OF 108
DOC NO:	038-05005-01
DATE: Thursday, June 22, 2023	REV: 13
SKU: VCK190	

CONFIDENTIAL AND PROPRIETARY TO ADVANCED MICRO DEVICES INC.

© 2021 Advanced Micro Devices

This AMD Board schematic and design is the exclusive property of AMD, and is provided only to entities under a non-disclosure agreement with AMD for evaluation purposes. Further distribution or disclosure is strictly prohibited. Use of this schematic and design for any purpose other than evaluation requires a Board Technology License Agreement with AMD. AMD makes no representations or warranties of any kind regarding this schematic and design, including, not limited to, any implied warranty of merchantability or fitness for a particular purpose, and disclaims responsibility for any consequences resulting from use of the information included herein.

TITLE: VCK190/VMK180

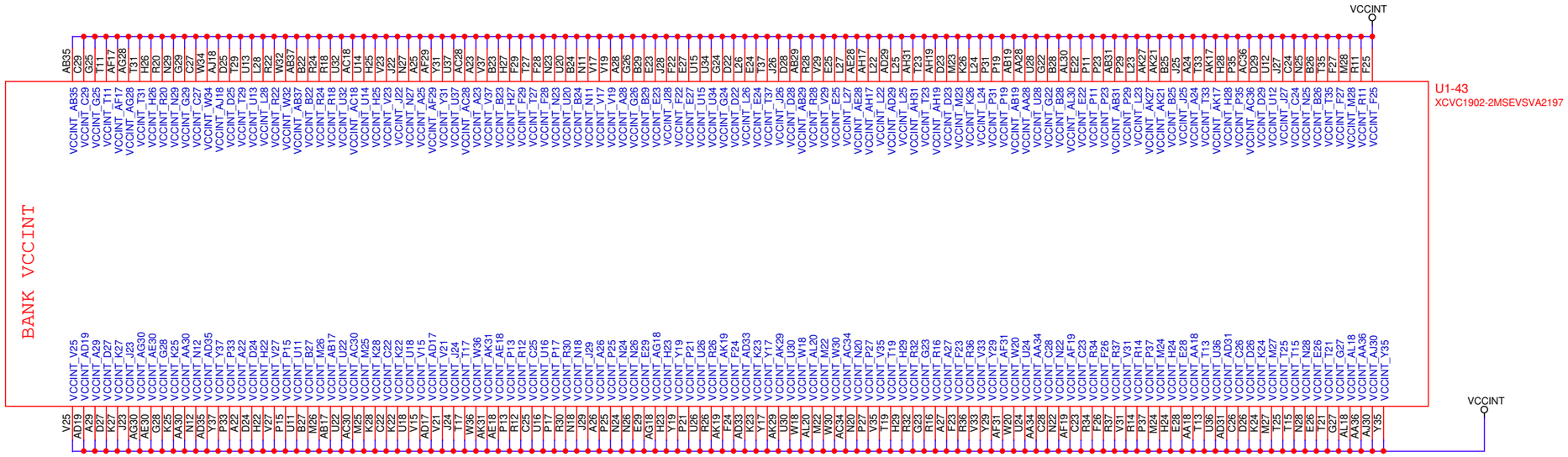

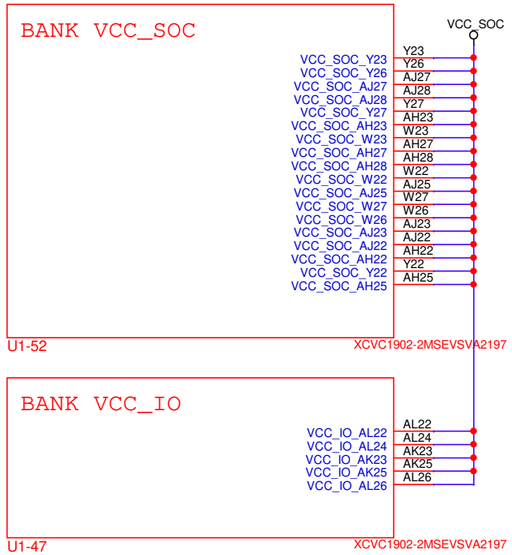

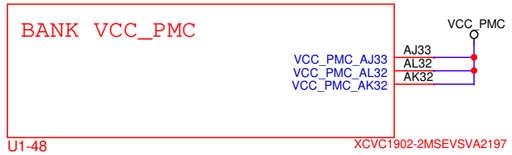

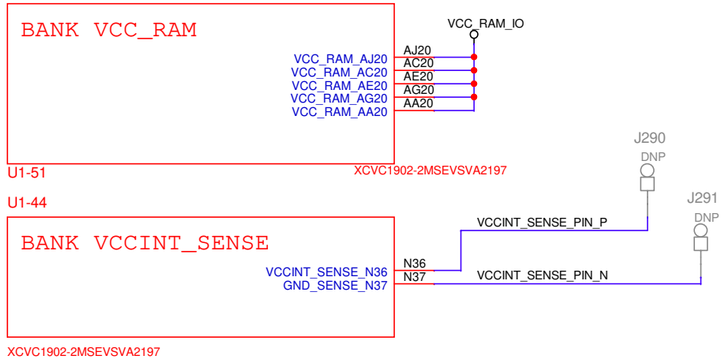

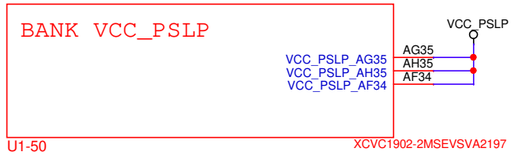

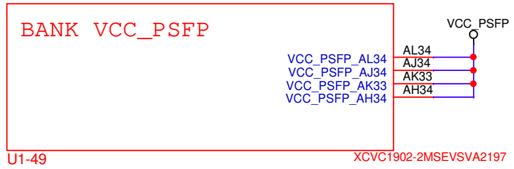

AMD

AECG
2100 LOGIC DRIVE
SAN JOSE CA

PAGE:	016 Versal Power 1
PAGE NUMBER:	16 OF 108
DOC NO:	038-05005-01
DATE: Thursday, June 22, 2023	REV: 13
SKU: VCK190	

CONFIDENTIAL AND PROPRIETARY TO ADVANCED MICRO DEVICES INC.

© 2021 Advanced Micro Devices

This AMD Board schematic and design is the exclusive property of AMD, and is provided only to entities under a non-disclosure agreement with AMD for evaluation purposes. Further distribution or disclosure is strictly prohibited. Use of this schematic and design for any purpose other than evaluation requires a Board Technology License Agreement with AMD. AMD makes no representations or warranties of any kind regarding this schematic and design, including, not limited to, any implied warranty of merchantability or fitness for a particular purpose, and disclaims responsibility for any consequences resulting from use of the information included herein.

TITLE: VCK190/VMK180

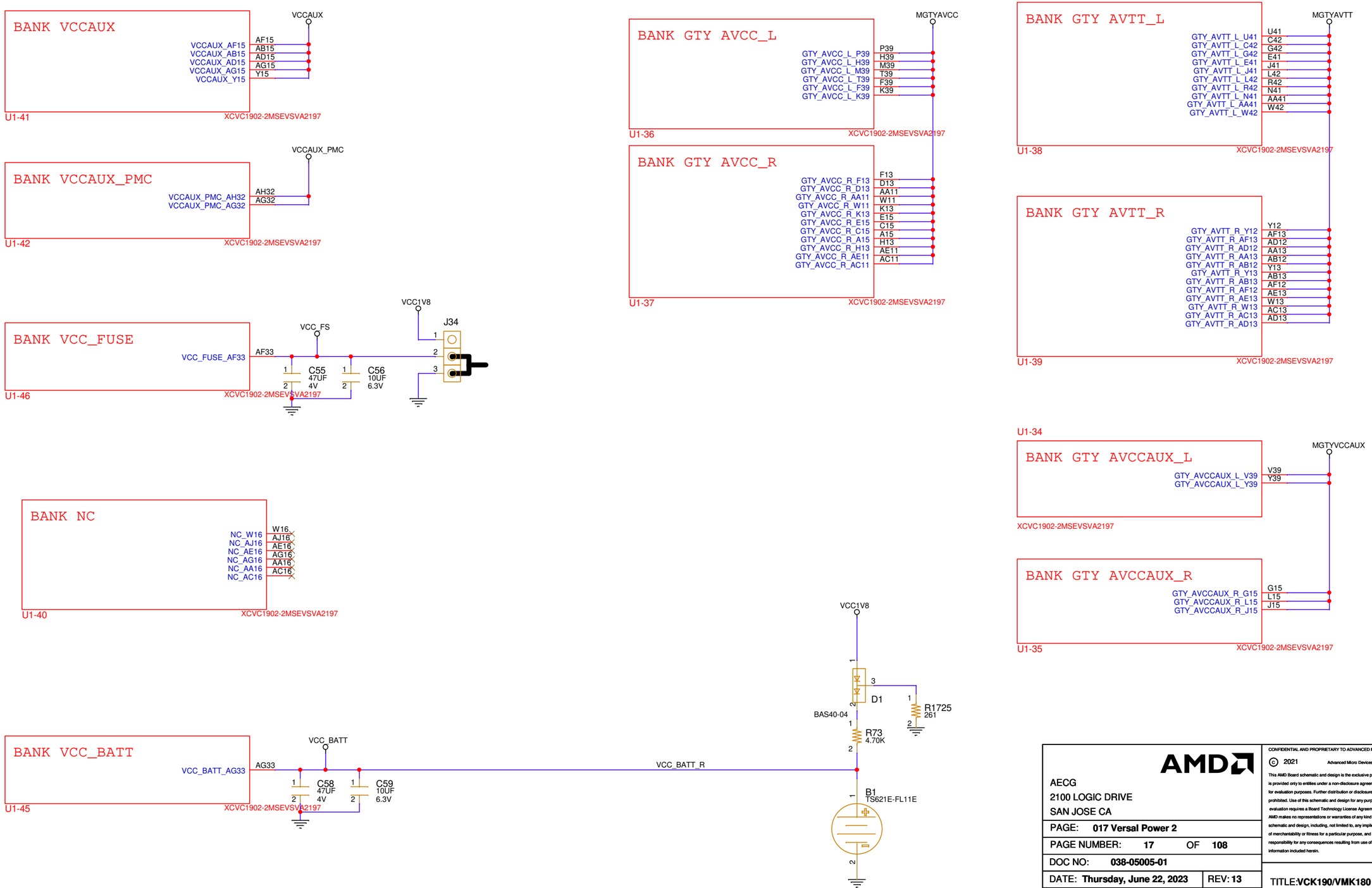

AECG
2100 LOGIC DRIVE
SAN JOSE CA

PAGE:	017 Versal Power 2
PAGE NUMBER:	17 OF 108
DOC NO:	038-05005-01
DATE: Thursday, June 22, 2023	REV: 13
SKU: VCK190	

CONFIDENTIAL AND PROPRIETARY TO ADVANCED MICRO DEVICES INC.
© 2021 Advanced Micro Devices
This AMD Board schematic and design is the exclusive property of AMD, and is provided only to entities under a non-disclosure agreement with AMD for evaluation purposes. Further distribution or disclosure is strictly prohibited. Use of this schematic and design for any purpose other than evaluation requires a Board Technology License Agreement with AMD. AMD makes no representations or warranties of any kind regarding this schematic and design, including, not limited to, any implied warranty of merchantability or fitness for a particular purpose, and disclaims responsibility for any consequences resulting from use of the information included herein.

TITLE: VCK190/VMK180

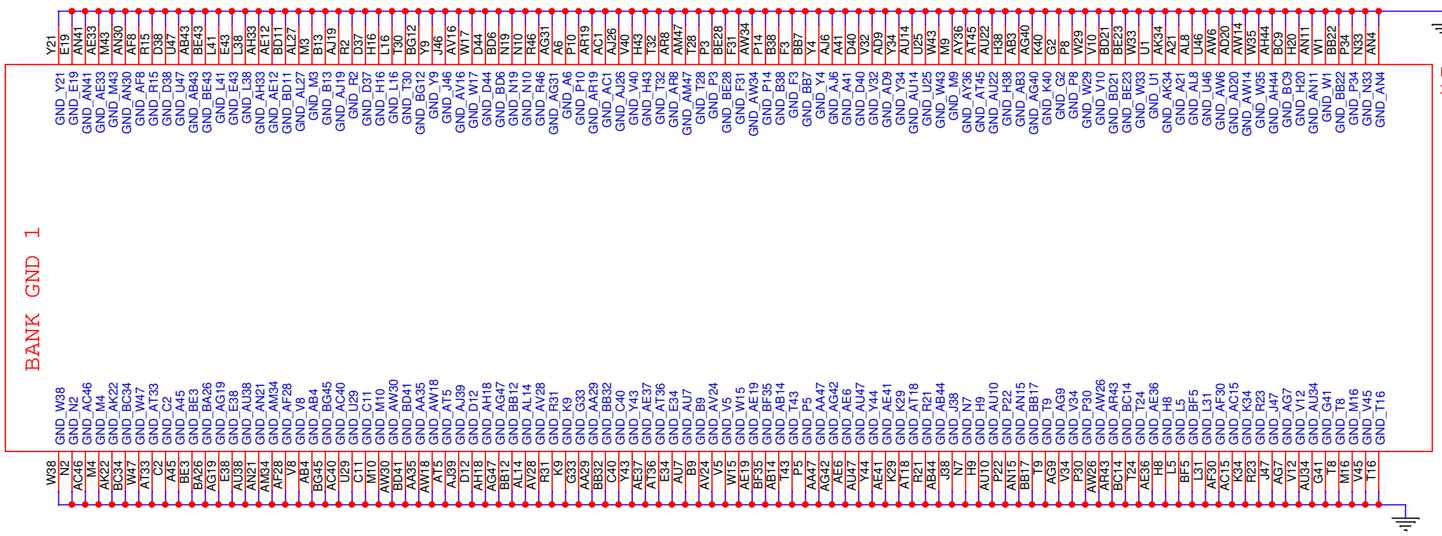

AECG
2100 LOGIC DRIVE
SAN JOSE CA

PAGE: **018 Versal GND 1**

PAGE NUMBER: **18** OF **108**

DOC NO: **038-05005-01**

DATE: **Thursday, June 22, 2023** REV: **13**

SKU: **VCK190**

CONFIDENTIAL AND PROPRIETARY TO ADVANCED MICRO DEVICES INC.

© 2021 Advanced Micro Devices

This AMD Board schematic and design is the exclusive property of AMD, and is provided only to entities under a non-disclosure agreement with AMD for evaluation purposes. Further distribution or disclosure is strictly prohibited. Use of this schematic and design for any purpose other than evaluation requires a Board Technology License Agreement with AMD. AMD makes no representations or warranties of any kind regarding this schematic and design, including, not limited to, any implied warranty of merchantability or fitness for a particular purpose, and disclaims responsibility for any consequences resulting from use of the information included herein.

TITLE: **VCK190/VMK180**

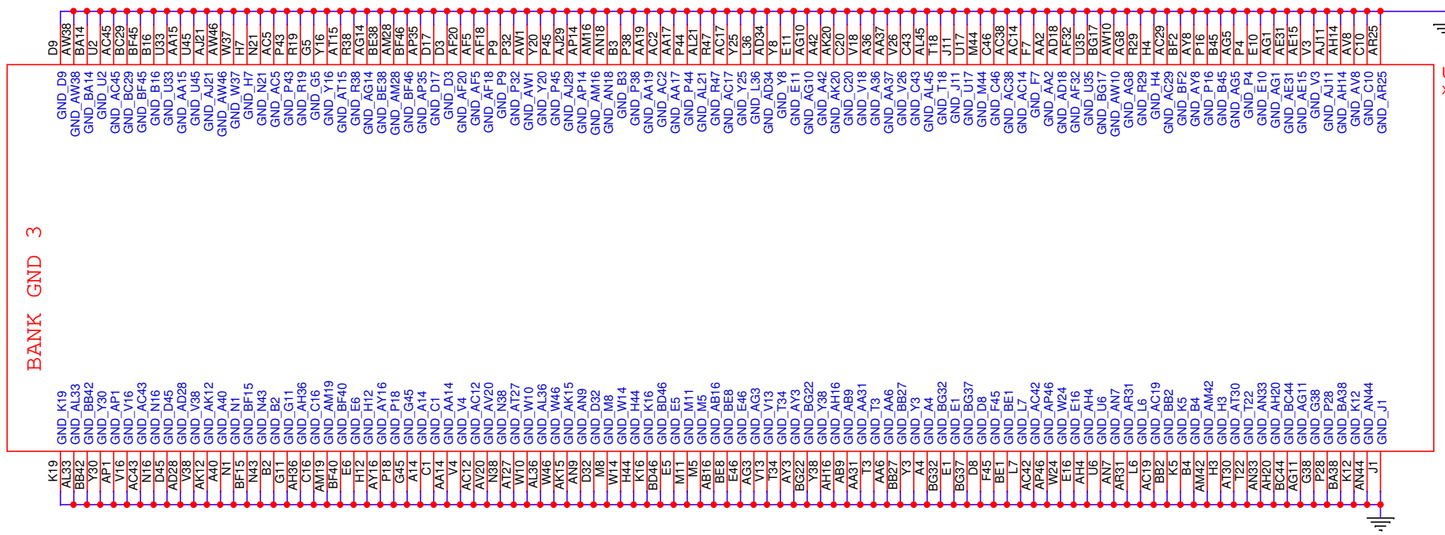

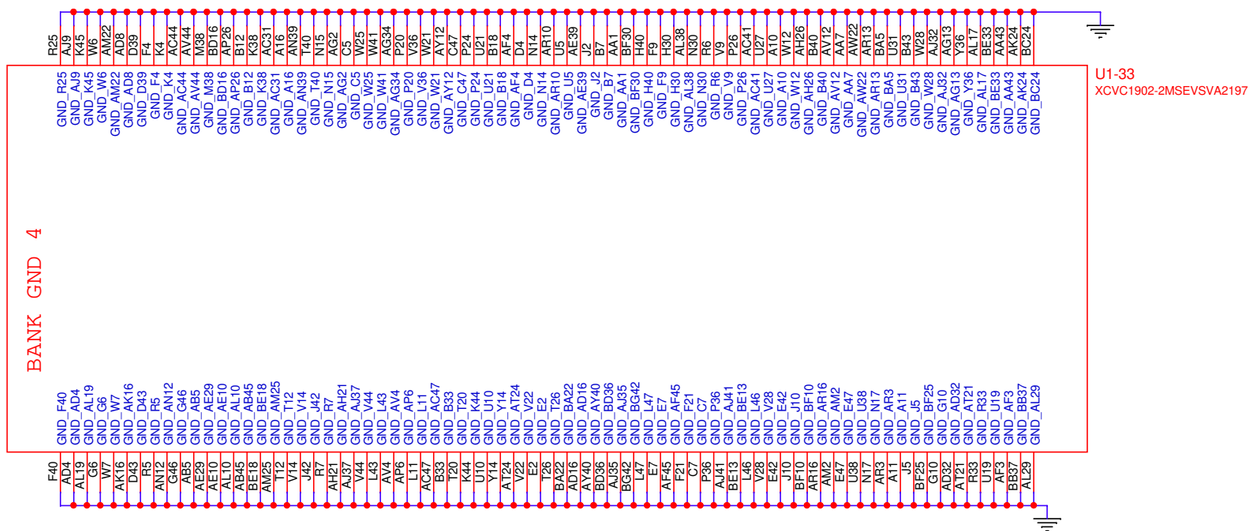

AECG
2100 LOGIC DRIVE
SAN JOSE CA

PAGE:	019 Versal GND 2
PAGE NUMBER:	19 OF 108
DOC NO:	038-05005-01
DATE: Thursday, June 22, 2023	REV: 13
SKU: VCK190	

CONFIDENTIAL AND PROPRIETARY TO ADVANCED MICRO DEVICES INC.
© 2021 Advanced Micro Devices
This AMD Board schematic and design is the exclusive property of AMD, and is provided only to entities under a non-disclosure agreement with AMD for evaluation purposes. Further distribution or disclosure is strictly prohibited. Use of this schematic and design for any purpose other than evaluation requires a Board Technology License Agreement with AMD. AMD makes no representations or warranties of any kind regarding this schematic and design, including, not limited to, any implied warranty of merchantability or fitness for a particular purpose, and disclaims responsibility for any consequences resulting from use of the information included herein.

TITLE: VCK190/VMK180

VCCINT

Per UG863 Early Draft 5/15/19

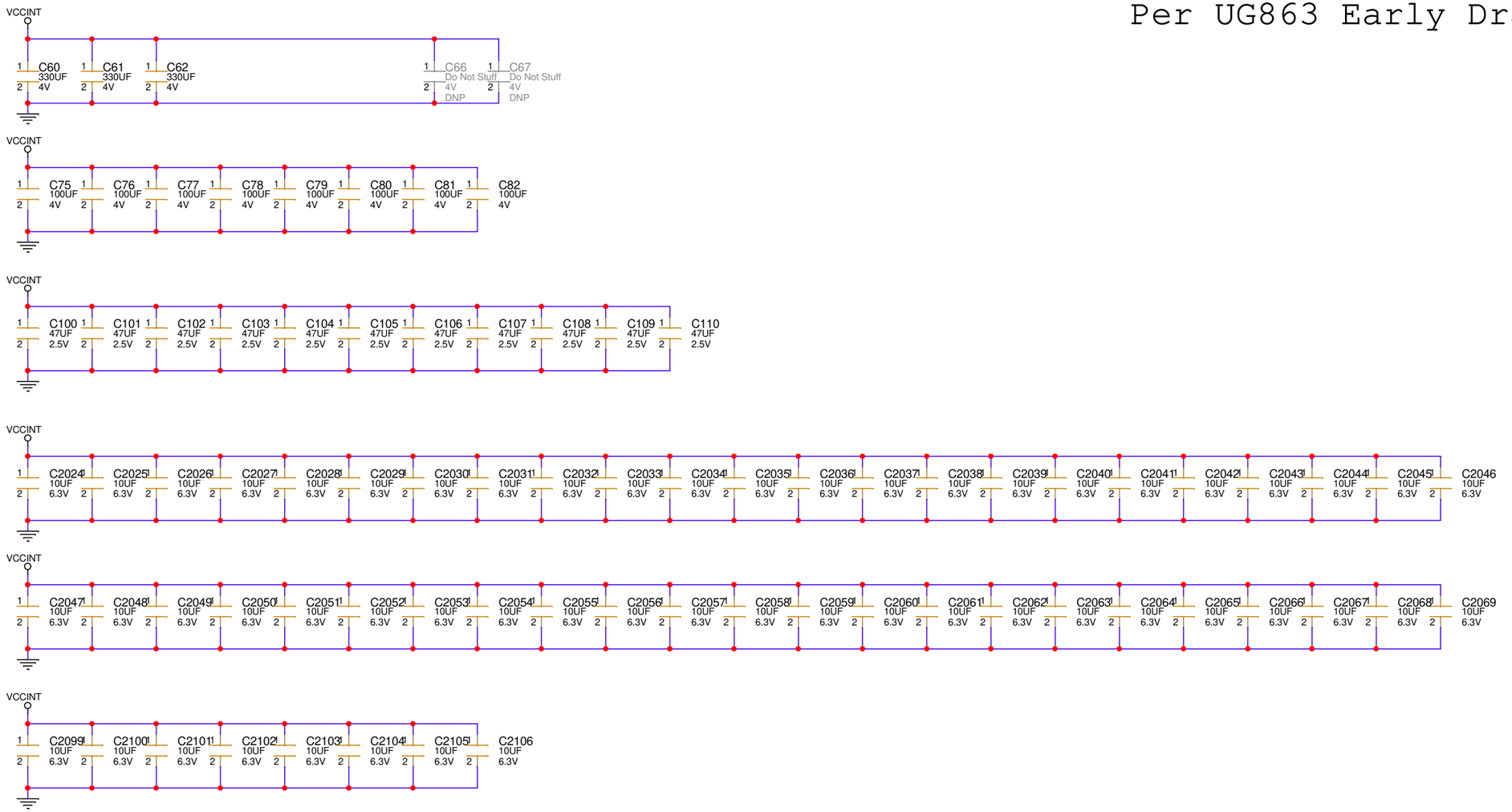

VCC_SOC

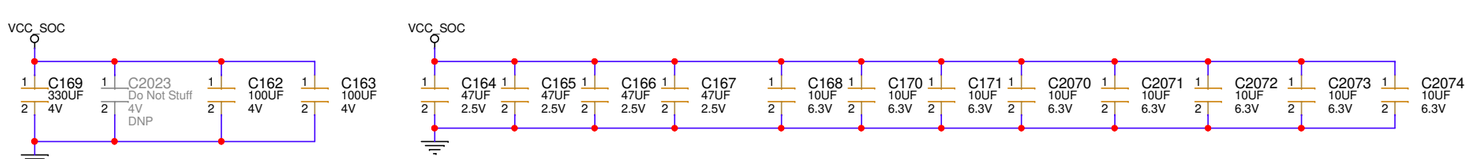

AECG
2100 LOGIC DRIVE
SAN JOSE CA

PAGE:	020 Versal Decoupling 1
PAGE NUMBER:	20 OF 108
DOC NO:	038-05005-01
DATE: Thursday, June 22, 2023	REV: 13
SKU: VCK190	

CONFIDENTIAL AND PROPRIETARY TO ADVANCED MICRO DEVICES INC.
© 2021 Advanced Micro Devices
This AMD Board schematic and design is the exclusive property of AMD, and is provided only to entities under a non-disclosure agreement with AMD for evaluation purposes. Further distribution or disclosure is strictly prohibited. Use of this schematic and design for any purpose other than evaluation requires a Board Technology License Agreement with AMD. AMD makes no representations or warranties of any kind regarding this schematic and design, including, not limited to, any implied warranty of merchantability or fitness for a particular purpose, and disclaims responsibility for any consequences resulting from use of the information included herein.

TITLE: VCK190/VMK180

VCC_PMC

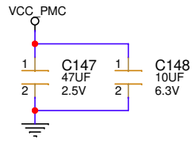

VCC_RAM_IO

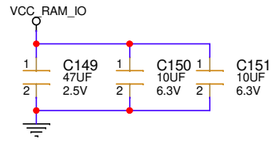

VCC_PSLP

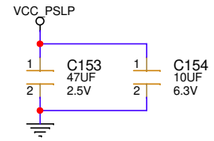

VCC_PSFP

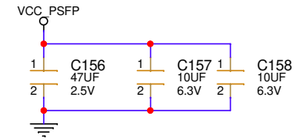

MGTYAVCC

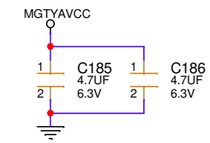

VCCAUX

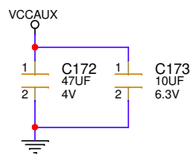

VCCAUX_PMC

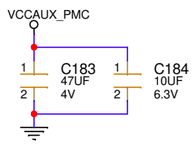

MGTYAVTT

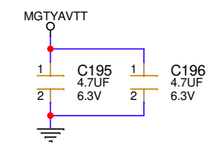

VCCO_500, 501, 502, 503

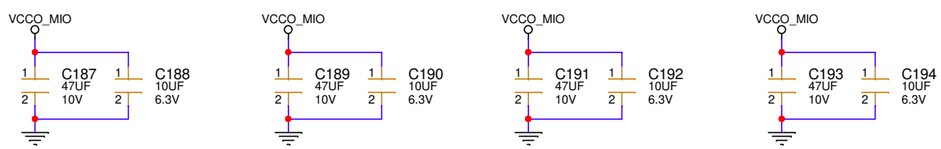

MGTYVCCAUX

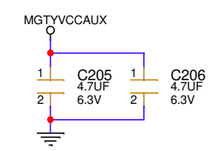

VCC1V1_LP4

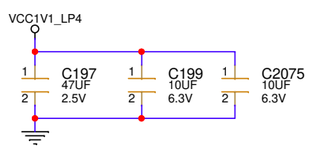

VCC1V2_DDR4

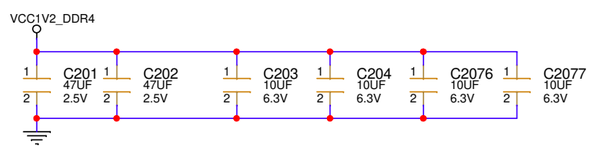

VADJ_FMC

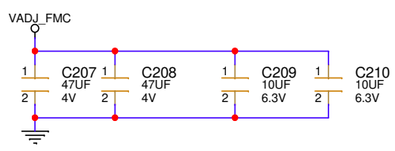

VCC1V8

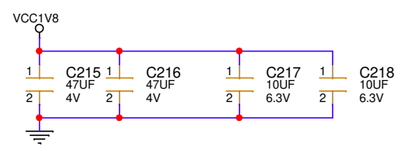

VCC3V3

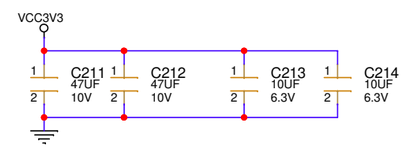

AMD

AECG
2100 LOGIC DRIVE
SAN JOSE CA

PAGE: **021 Versal Decoupling 2**

PAGE NUMBER: **21** OF **108**

DOC NO: **038-05005-01**

DATE: **Thursday, June 22, 2023** REV: **13**

SKU: **VCK190**

CONFIDENTIAL AND PROPRIETARY TO ADVANCED MICRO DEVICES INC.

© 2021 Advanced Micro Devices

This AMD Board schematic and design is the exclusive property of AMD, and is provided only to entities under a non-disclosure agreement with AMD for evaluation purposes. Further distribution or disclosure is strictly prohibited. Use of this schematic and design for any purpose other than evaluation requires a Board Technology License Agreement with AMD. AMD makes no representations or warranties of any kind regarding this schematic and design, including, not limited to, any implied warranty of merchantability or fitness for a particular purpose, and disclaims responsibility for any consequences resulting from use of the information included herein.

TITLE: **VCK190/VMK180**

20 VCCINT pins

0201 cap for all power pins under BGA

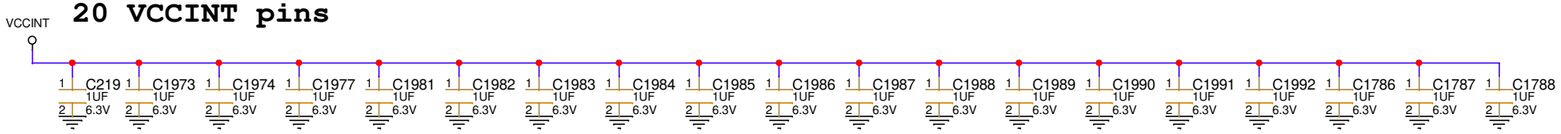

AECG
2100 LOGIC DRIVE
SAN JOSE CA

PAGE: **022 Versal Decoupling 3**

PAGE NUMBER: **22** OF **108**

DOC NO: **038-05005-01**

DATE: **Thursday, June 22, 2023** REV: **13**

SKU: **VCK190**

CONFIDENTIAL AND PROPRIETARY TO ADVANCED MICRO DEVICES INC.

© 2021 Advanced Micro Devices

This AMD Board schematic and design is the exclusive property of AMD, and is provided only to entities under a non-disclosure agreement with AMD for evaluation purposes. Further distribution or disclosure is strictly prohibited. Use of this schematic and design for any purpose other than evaluation requires a Board Technology License Agreement with AMD. AMD makes no representations or warranties of any kind regarding this schematic and design, including, not limited to, any implied warranty of merchantability or fitness for a particular purpose, and disclaims responsibility for any consequences resulting from use of the information included herein.

TITLE: **VCK190/VMK180**

AECG
2100 LOGIC DRIVE
SAN JOSE CA

PAGE: **023 Blank**

PAGE NUMBER: **23** OF **108**

DOC NO: **038-05005-01**

DATE: **Thursday, June 22, 2023** REV: **13**

SKU: **VCK190**

CONFIDENTIAL AND PROPRIETARY TO ADVANCED MICRO DEVICES INC.

© 2021 Advanced Micro Devices

This AMD Board schematic and design is the exclusive property of AMD, and is provided only to entities under a non-disclosure agreement with AMD for evaluation purposes. Further distribution or disclosure is strictly prohibited. Use of this schematic and design for any purpose other than evaluation requires a Board Technology License Agreement with AMD. AMD makes no representations or warranties of any kind regarding this schematic and design, including, not limited to, any implied warranty of merchantability or fitness for a particular purpose, and disclaims responsibility for any consequences resulting from use of the information included herein.

TITLE:**VCK190/VMK180**

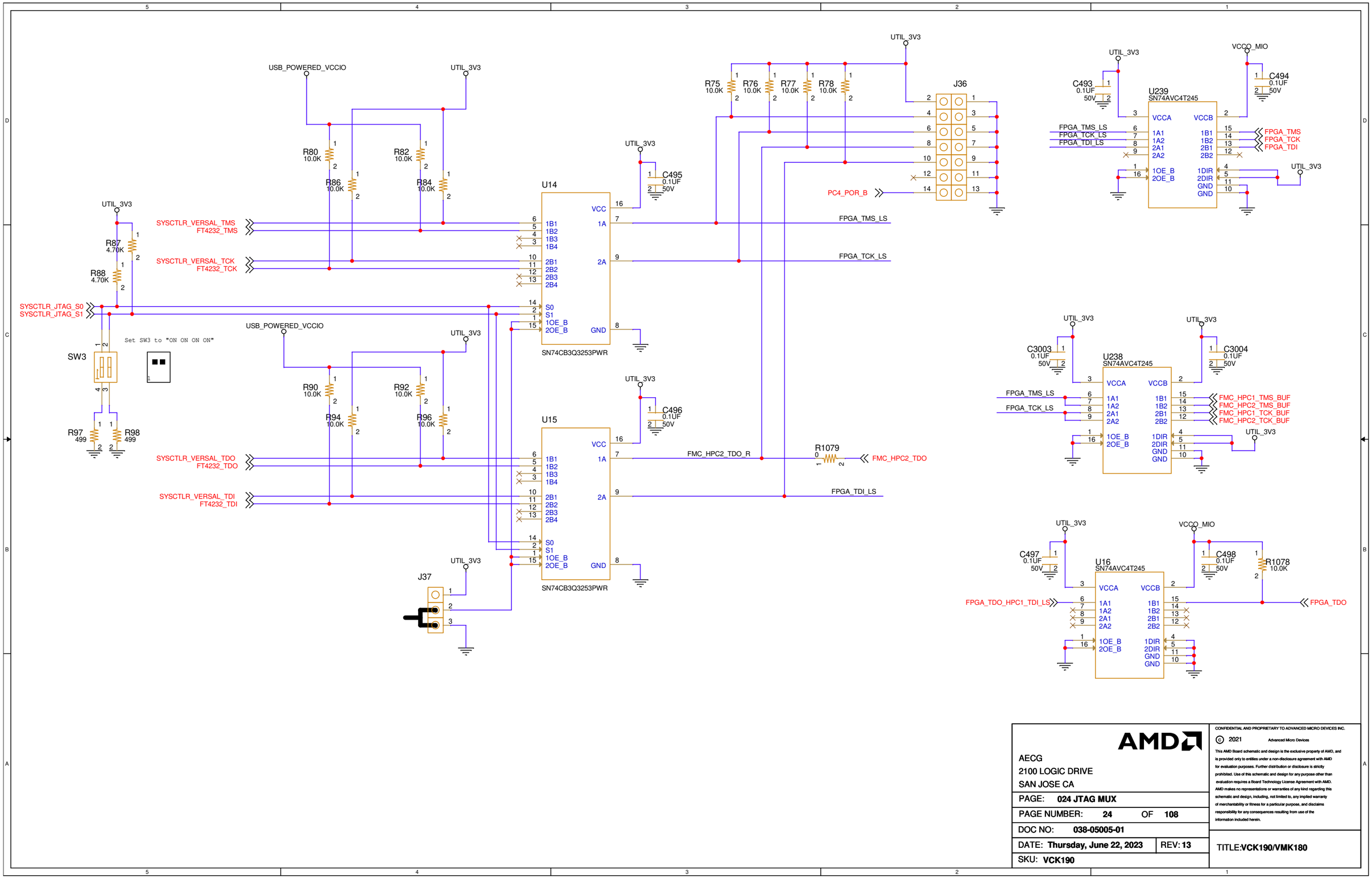

AECG
2100 LOGIC DRIVE
SAN JOSE CA

PAGE: **024 JTAG MUX**

PAGE NUMBER: **24** OF **108**

DOC NO: **038-05005-01**

DATE: **Thursday, June 22, 2023** REV: **13**

SKU: **VCK190**

CONFIDENTIAL AND PROPRIETARY TO ADVANCED MICRO DEVICES INC.

© 2021 Advanced Micro Devices

This AMD Board schematic and design is the exclusive property of AMD, and is provided only to entities under a non-disclosure agreement with AMD for evaluation purposes. Further distribution or disclosure is strictly prohibited. Use of this schematic and design for any purpose other than evaluation requires a Board Technology License Agreement with AMD. AMD makes no representations or warranties of any kind regarding this schematic and design, including, not limited to, any implied warranty of merchantability or fitness for a particular purpose, and disclaims responsibility for any consequences resulting from use of the information included herein.

TITLE: **VCK190/VMK180**

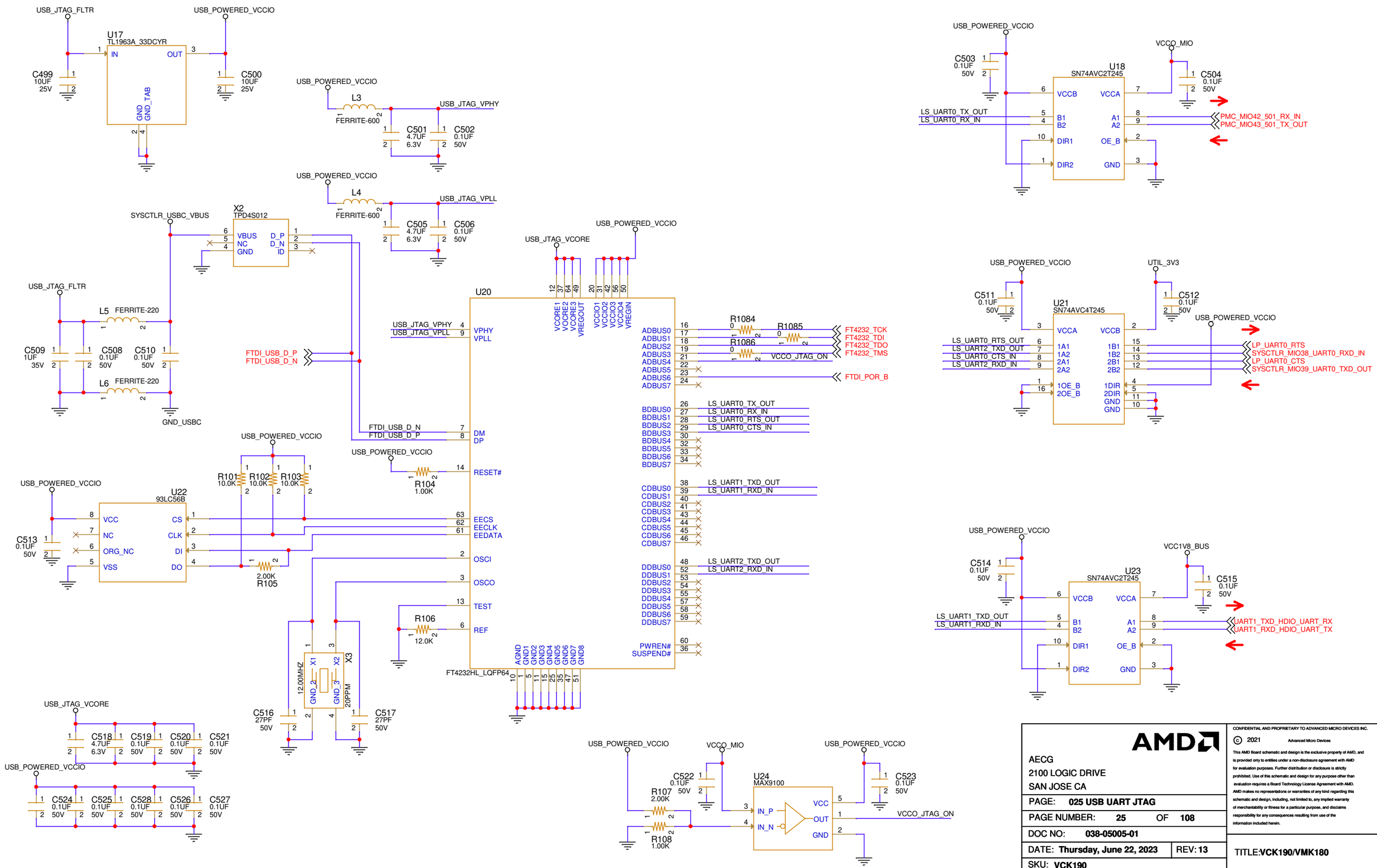

AMD

AECG
2100 LOGIC DRIVE
SAN JOSE CA

PAGE:	025 USB UART JTAG
PAGE NUMBER:	25 OF 108
DOC NO:	038-05005-01
DATE: Thursday, June 22, 2023	REV: 13
SKU: VCK190	

CONFIDENTIAL AND PROPRIETARY TO ADVANCED MICRO DEVICES INC.
© 2021 Advanced Micro Devices
This AMD Board schematic and design is the exclusive property of AMD, and is provided only to entities under a non-disclosure agreement with AMD for evaluation purposes. Further distribution or disclosure is strictly prohibited. Use of this schematic and design for any purpose other than evaluation requires a Board Technology License Agreement with AMD. AMD makes no representations or warranties of any kind regarding this schematic and design, including, not limited to, any implied warranty of merchantability or fitness for a particular purpose, and disclaims responsibility for any consequences resulting from use of the information included herein.

TITLE: VCK190/VMK180

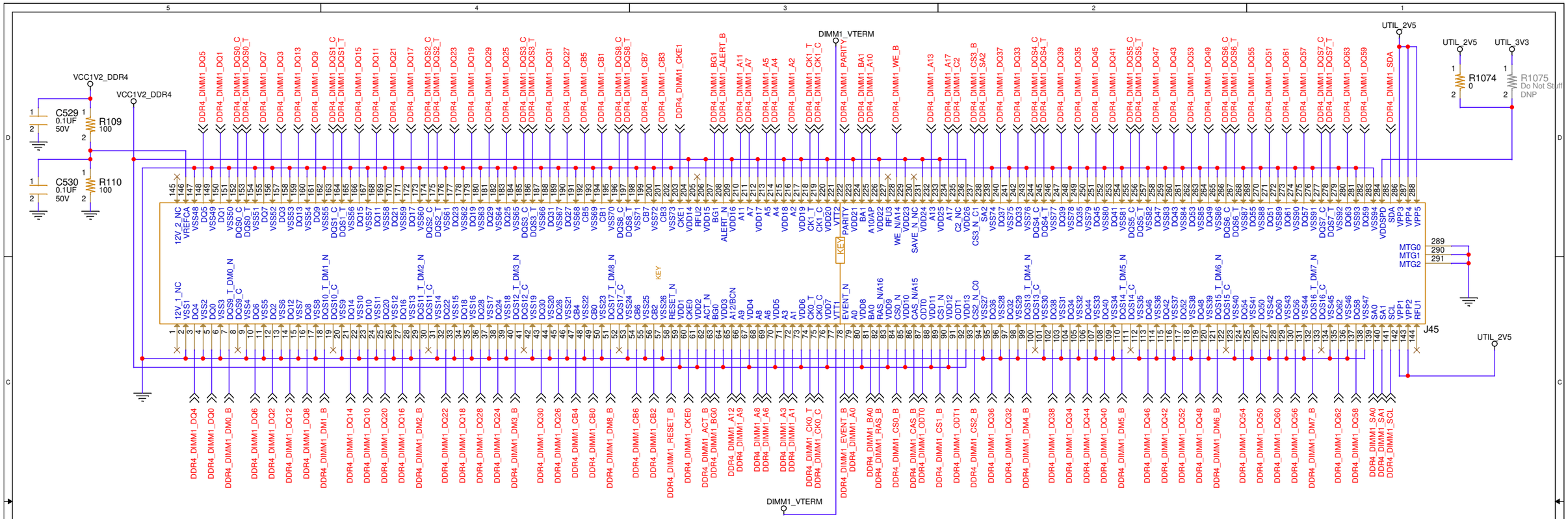

AMD

AECG
2100 LOGIC DRIVE
SAN JOSE CA

PAGE:	026 DDR4 DIMM Slot 1
PAGE NUMBER:	26 OF 108
DOC NO:	038-05005-01
DATE: Thursday, June 22, 2023	REV: 13
SKU: VCK190	

CONFIDENTIAL AND PROPRIETARY TO ADVANCED MICRO DEVICES INC.
© 2021 Advanced Micro Devices
This AMD Board schematic and design is the exclusive property of AMD, and is provided only to entities under a non-disclosure agreement with AMD for evaluation purposes. Further distribution or disclosure is strictly prohibited. Use of this schematic and design for any purpose other than evaluation requires a Board Technology License Agreement with AMD. AMD makes no representations or warranties of any kind regarding this schematic and design, including, not limited to, any implied warranty of merchantability or fitness for a particular purpose, and disclaims responsibility for any consequences resulting from use of the information included herein.

TITLE: VCK190/VMK180

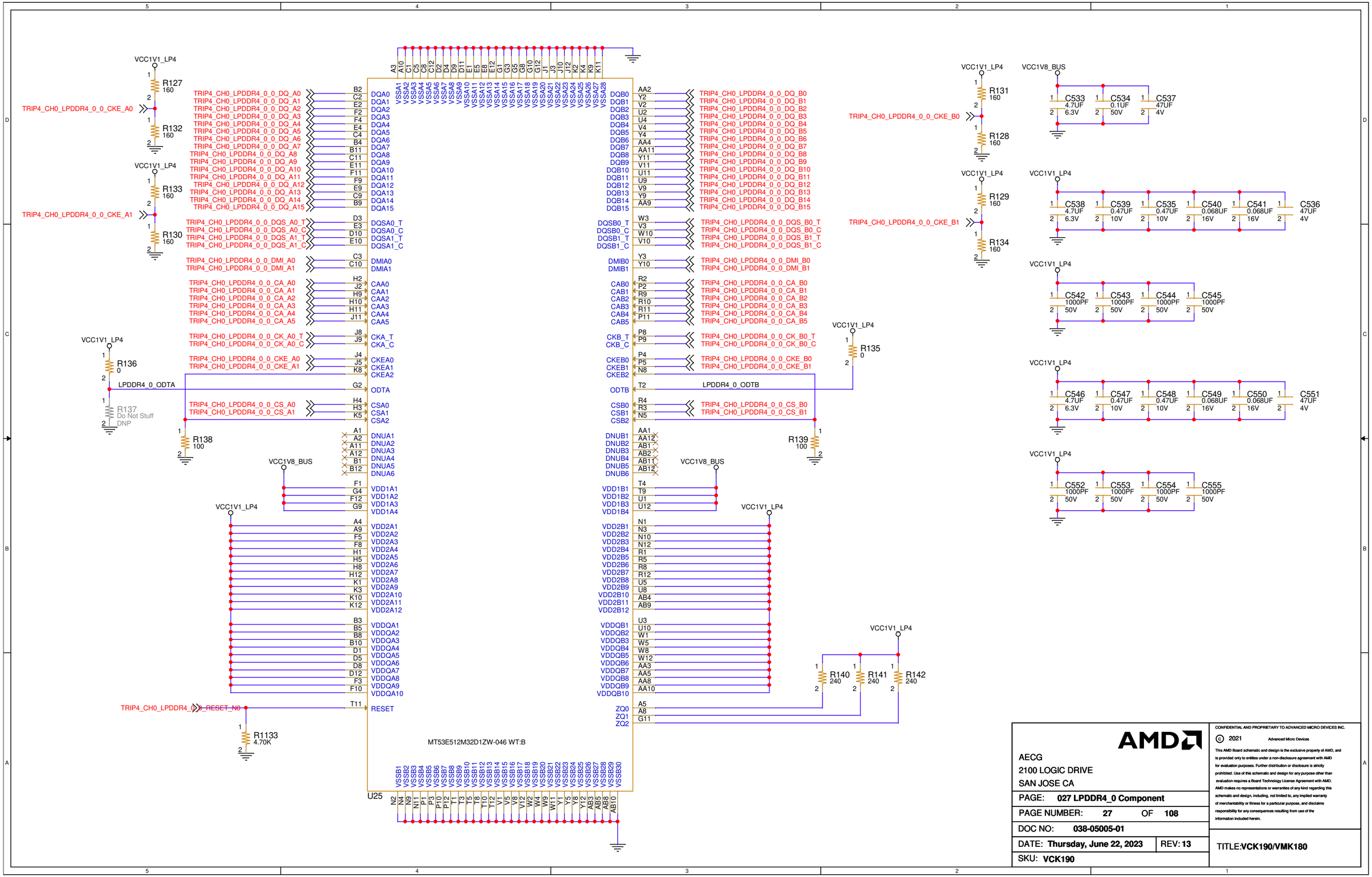

AECG
2100 LOGIC DRIVE
SAN JOSE CA

PAGE: 027 LPDDR4_0 Component

PAGE NUMBER: 27 OF 108

DOC NO: 038-05005-01

DATE: Thursday, June 22, 2023 REV: 13

SKU: VCK190

CONFIDENTIAL AND PROPRIETARY TO ADVANCED MICRO DEVICES INC.

© 2021 Advanced Micro Devices

This AMD Board schematic and design is the exclusive property of AMD, and is provided only to entities under a non-disclosure agreement with AMD for evaluation purposes. Further distribution or disclosure is strictly prohibited. Use of this schematic and design for any purpose other than evaluation requires a Board Technology License Agreement with AMD. AMD makes no representations or warranties of any kind regarding this schematic and design, including, not limited to, any implied warranty of merchantability or fitness for a particular purpose, and disclaims responsibility for any consequences resulting from use of the information included herein.

TITLE: VCK190/VMK180

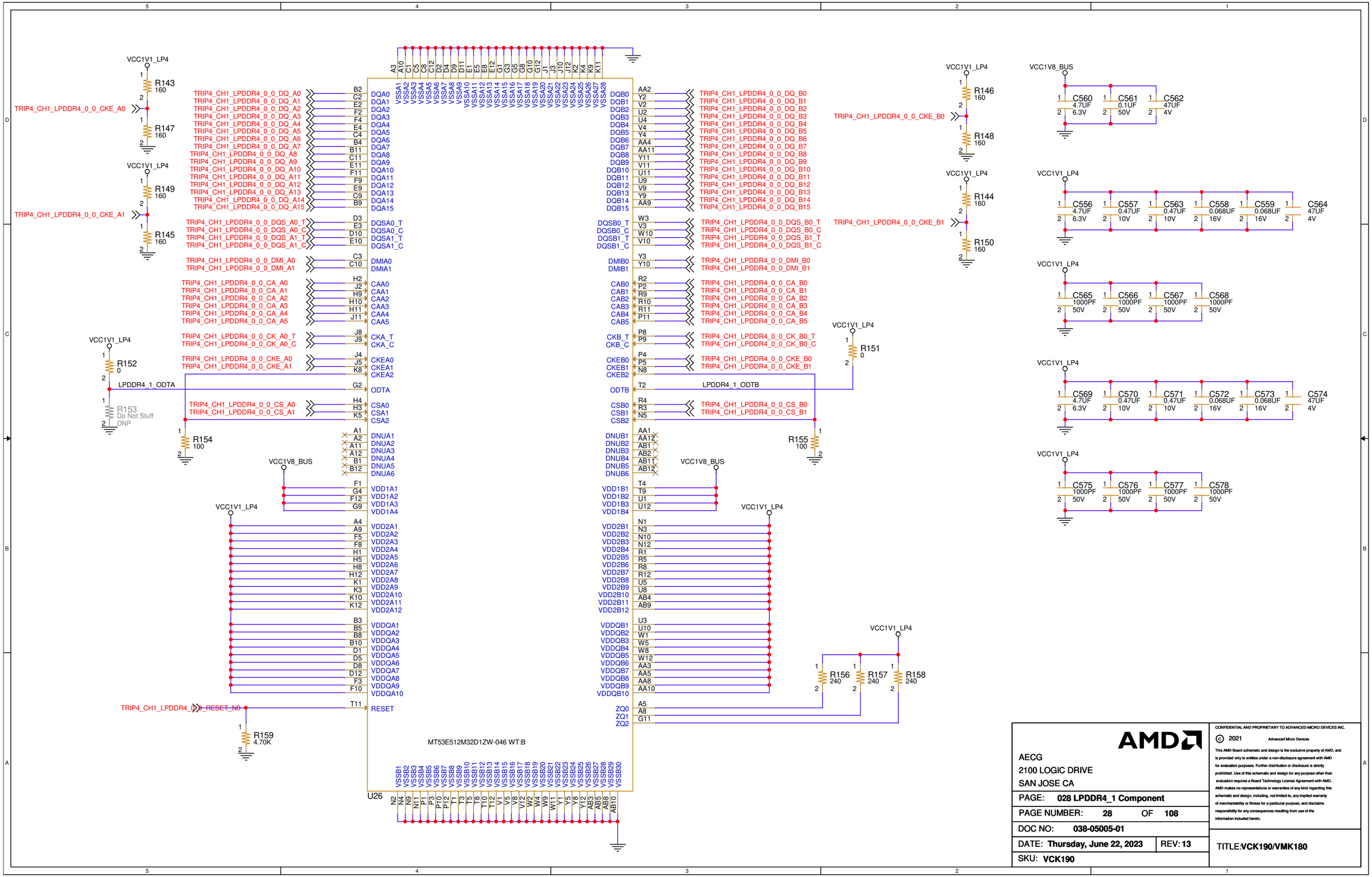

AECG
2100 LOGIC DRIVE
SAN JOSE CA

PAGE: 028 LPDDR4_1 Component

PAGE NUMBER: 28 OF 108

DOC NO: 038-05005-01

DATE: Thursday, June 22, 2023 REV: 13

SKU: VCK190

CONFIDENTIAL AND PROPRIETARY TO ADVANCED MICRO DEVICES INC.

© 2021 Advanced Micro Devices

This AMD Board schematic and design is the exclusive property of AMD, and is provided only to entities under a non-disclosure agreement with AMD for evaluation purposes. Further distribution or disclosure is strictly prohibited. Use of this schematic and design for any purpose other than evaluation requires a Board Technology License Agreement with AMD. AMD makes no representations or warranties of any kind regarding this schematic and design, including, not limited to, any implied warranty of merchantability or fitness for a particular purpose, and disclaims responsibility for any consequences resulting from use of the information included herein.

TITLE: VCK190/VMK180

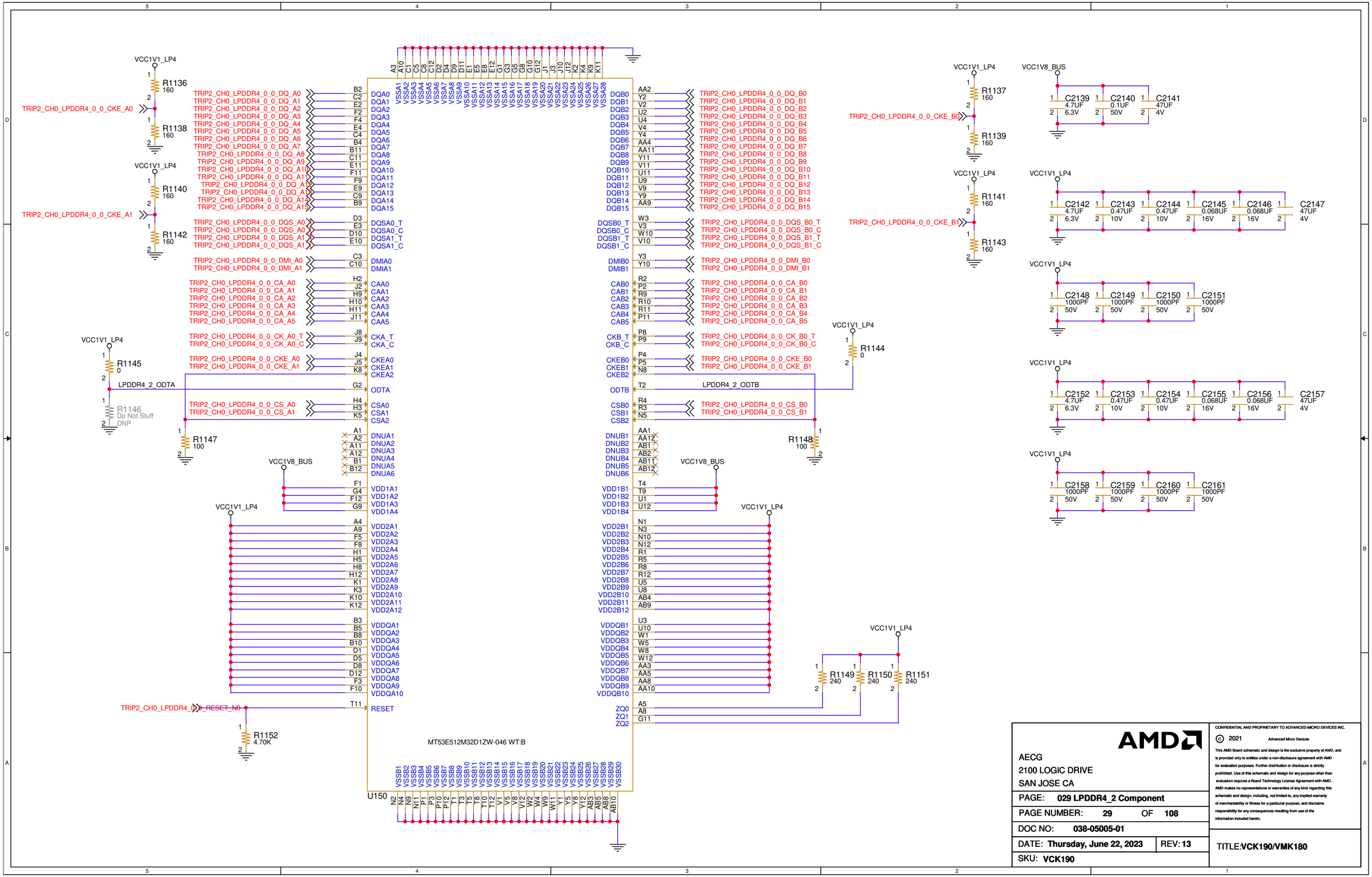

AMD

AECG
2100 LOGIC DRIVE
SAN JOSE CA

PAGE:	029 LPDDR4_2 Component
PAGE NUMBER:	29 OF 108
DOC NO:	038-05005-01
DATE: Thursday, June 22, 2023	REV: 13
SKU: VCK190	

CONFIDENTIAL AND PROPRIETARY TO ADVANCED MICRO DEVICES INC.
© 2021 Advanced Micro Devices
This AMD Board schematic and design is the exclusive property of AMD, and is provided only to entities under a non-disclosure agreement with AMD for evaluation purposes. Further distribution or disclosure is strictly prohibited. Use of this schematic and design for any purpose other than evaluation requires a Board Technology License Agreement with AMD. AMD makes no representations or warranties of any kind regarding this schematic and design, including, not limited to, any implied warranty of merchantability or fitness for a particular purpose, and disclaims responsibility for any consequences resulting from use of the information included herein.

TITLE: VCK190/VMK180

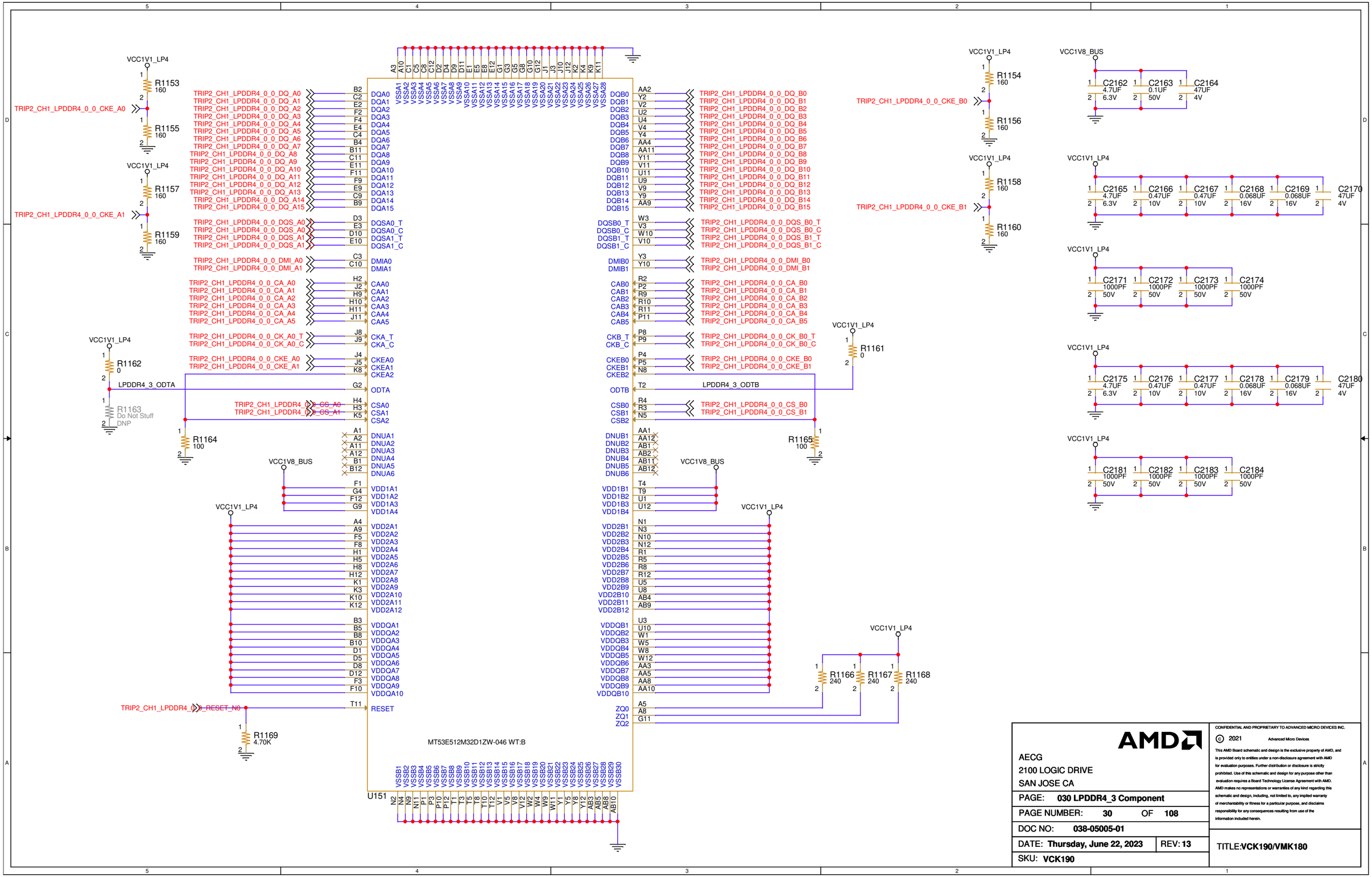

AMD

AECG
2100 LOGIC DRIVE
SAN JOSE CA

PAGE: **030 LPDDR4_3 Component**

PAGE NUMBER: **30** OF **108**

DOC NO: **038-05005-01**

DATE: **Thursday, June 22, 2023** REV: **13**

SKU: **VCK190**

CONFIDENTIAL AND PROPRIETARY TO ADVANCED MICRO DEVICES INC.

© 2021 Advanced Micro Devices

This AMD Board schematic and design is the exclusive property of AMD, and is provided only to entities under a non-disclosure agreement with AMD for evaluation purposes. Further distribution or disclosure is strictly prohibited. Use of this schematic and design for any purpose other than evaluation requires a Board Technology License Agreement with AMD. AMD makes no representations or warranties of any kind regarding this schematic and design, including, not limited to, any implied warranty of merchantability or fitness for a particular purpose, and disclaims responsibility for any consequences resulting from use of the information included herein.

TITLE: **VCK190/VMK180**

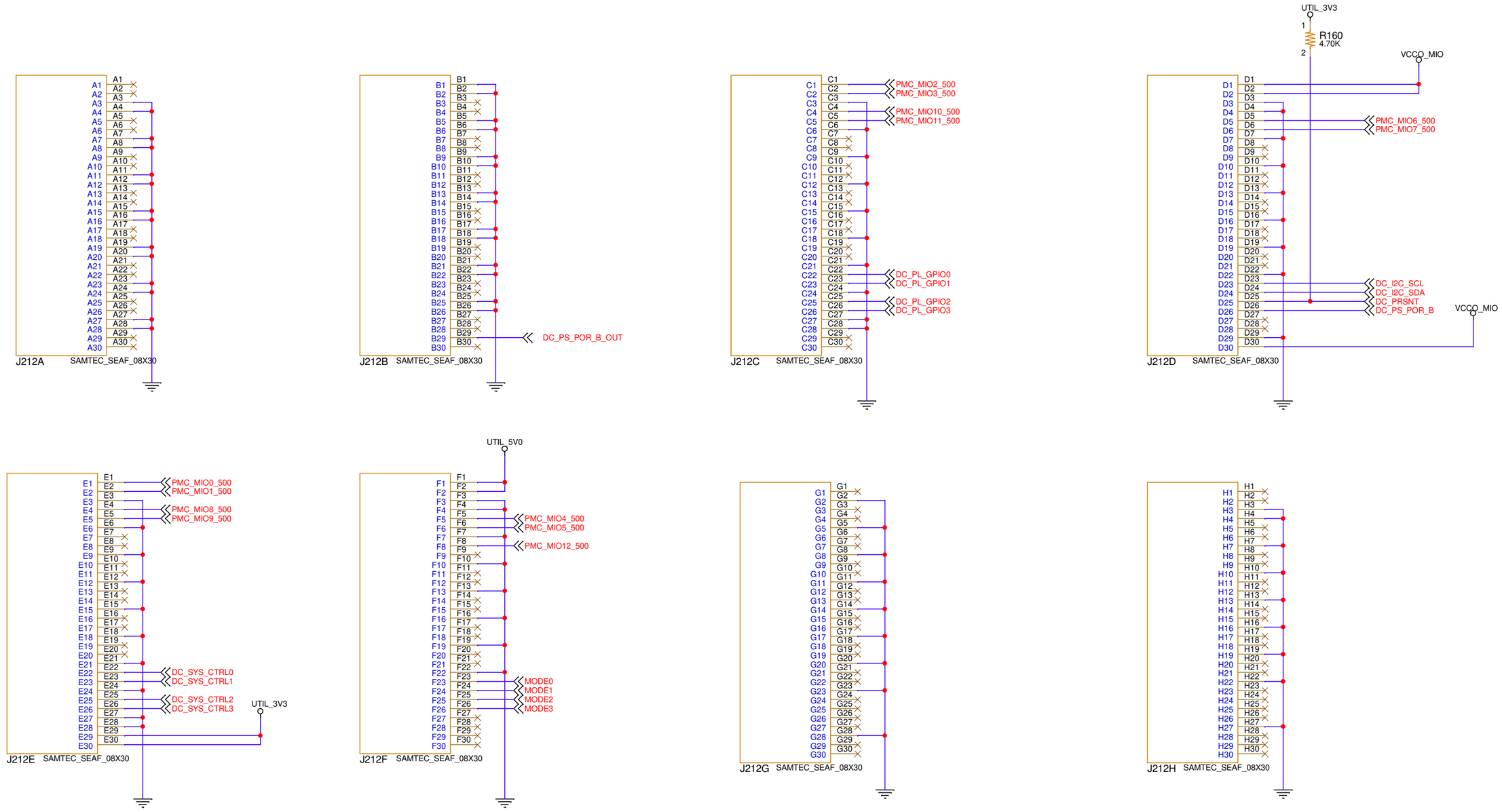

AECG
2100 LOGIC DRIVE
SAN JOSE CA

PAGE: **031 MIO Config DC Connector**

PAGE NUMBER: **31** OF **108**

DOC NO: **038-05005-01**

DATE: **Thursday, June 22, 2023** REV: **13**

SKU: **VCK190**

CONFIDENTIAL AND PROPRIETARY TO ADVANCED MICRO DEVICES INC.

© 2021 Advanced Micro Devices

This AMD Board schematic and design is the exclusive property of AMD, and is provided only to entities under a non-disclosure agreement with AMD for evaluation purposes. Further distribution or disclosure is strictly prohibited. Use of this schematic and design for any purpose other than evaluation requires a Board Technology License Agreement with AMD. AMD makes no representations or warranties of any kind regarding this schematic and design, including, not limited to, any implied warranty of merchantability or fitness for a particular purpose, and disclaims responsibility for any consequences resulting from use of the information included herein.

TITLE: **VCK190/VMK180**

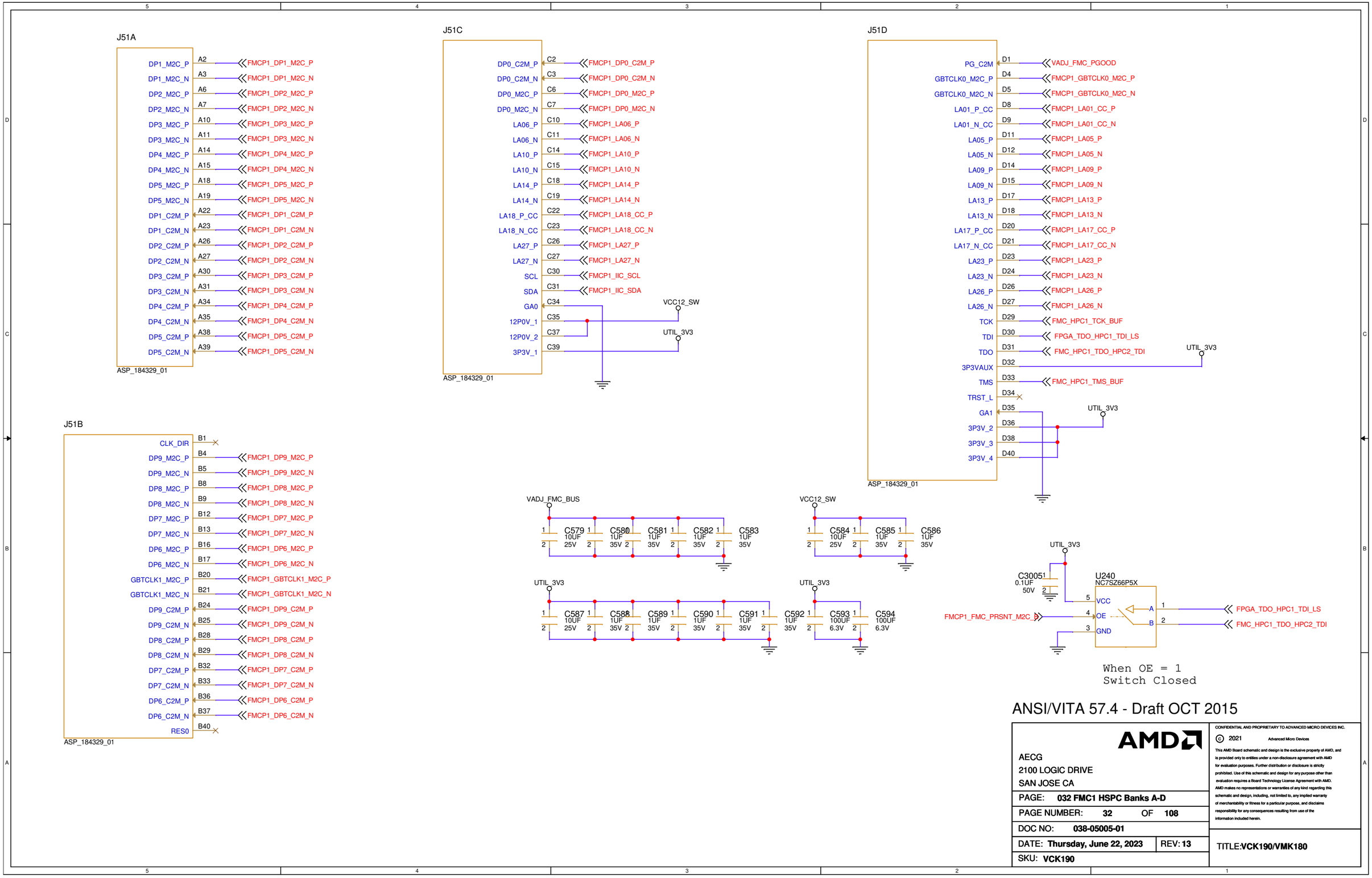

ANSI/VITA 57.4 - Draft OCT 2015

AMD

AECG
2100 LOGIC DRIVE
SAN JOSE CA

PAGE: **032 FMC1 HSPC Banks A-D**

PAGE NUMBER: **32** OF **108**

DOC NO: **038-05005-01**

DATE: **Thursday, June 22, 2023** REV: **13**

SKU: **VCK190**

CONFIDENTIAL AND PROPRIETARY TO ADVANCED MICRO DEVICES INC.

© 2021 Advanced Micro Devices

This AMD Board schematic and design is the exclusive property of AMD, and is provided only to entities under a non-disclosure agreement with AMD for evaluation purposes. Further distribution or disclosure is strictly prohibited. Use of this schematic and design for any purpose other than evaluation requires a Board Technology License Agreement with AMD. AMD makes no representations or warranties of any kind regarding this schematic and design, including, not limited to, any implied warranty of merchantability or fitness for a particular purpose, and disclaims responsibility for any consequences resulting from use of the information included herein.

TITLE: **VCK190/VMK180**

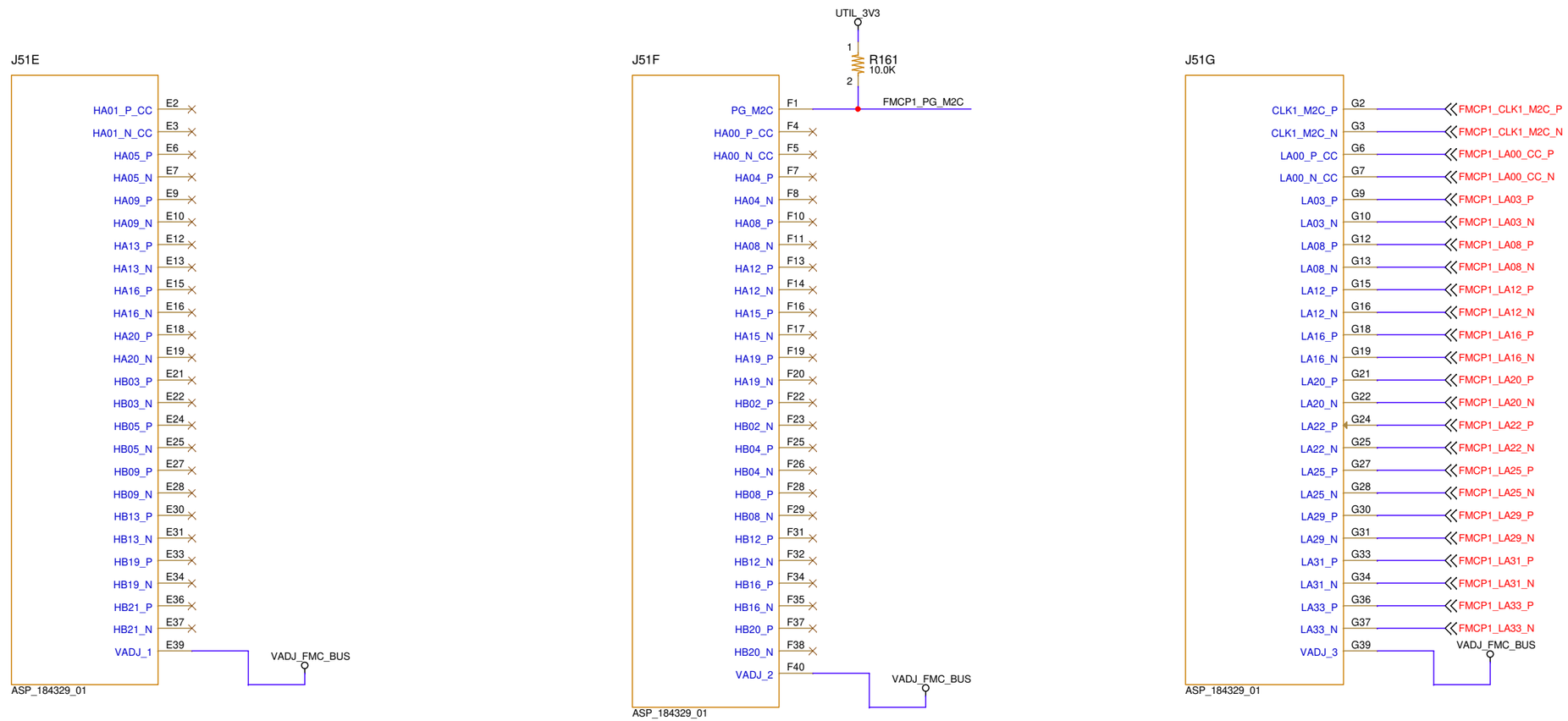

ANSI/VITA 57.4 - Draft OCT 2015

AMD

AECG
2100 LOGIC DRIVE
SAN JOSE CA

PAGE: **033 FMC1 HSPC Banks E-G**

PAGE NUMBER: **33** OF **108**

DOC NO: **038-05005-01**

DATE: **Thursday, June 22, 2023** REV: **13**

SKU: **VCK190**

CONFIDENTIAL AND PROPRIETARY TO ADVANCED MICRO DEVICES INC.

© 2021 Advanced Micro Devices

This AMD Board schematic and design is the exclusive property of AMD, and is provided only to entities under a non-disclosure agreement with AMD for evaluation purposes. Further distribution or disclosure is strictly prohibited. Use of this schematic and design for any purpose other than evaluation requires a Board Technology License Agreement with AMD. AMD makes no representations or warranties of any kind regarding this schematic and design, including, not limited to, any implied warranty of merchantability or fitness for a particular purpose, and disclaims responsibility for any consequences resulting from use of the information included herein.

TITLE: **VCK190/VMK180**

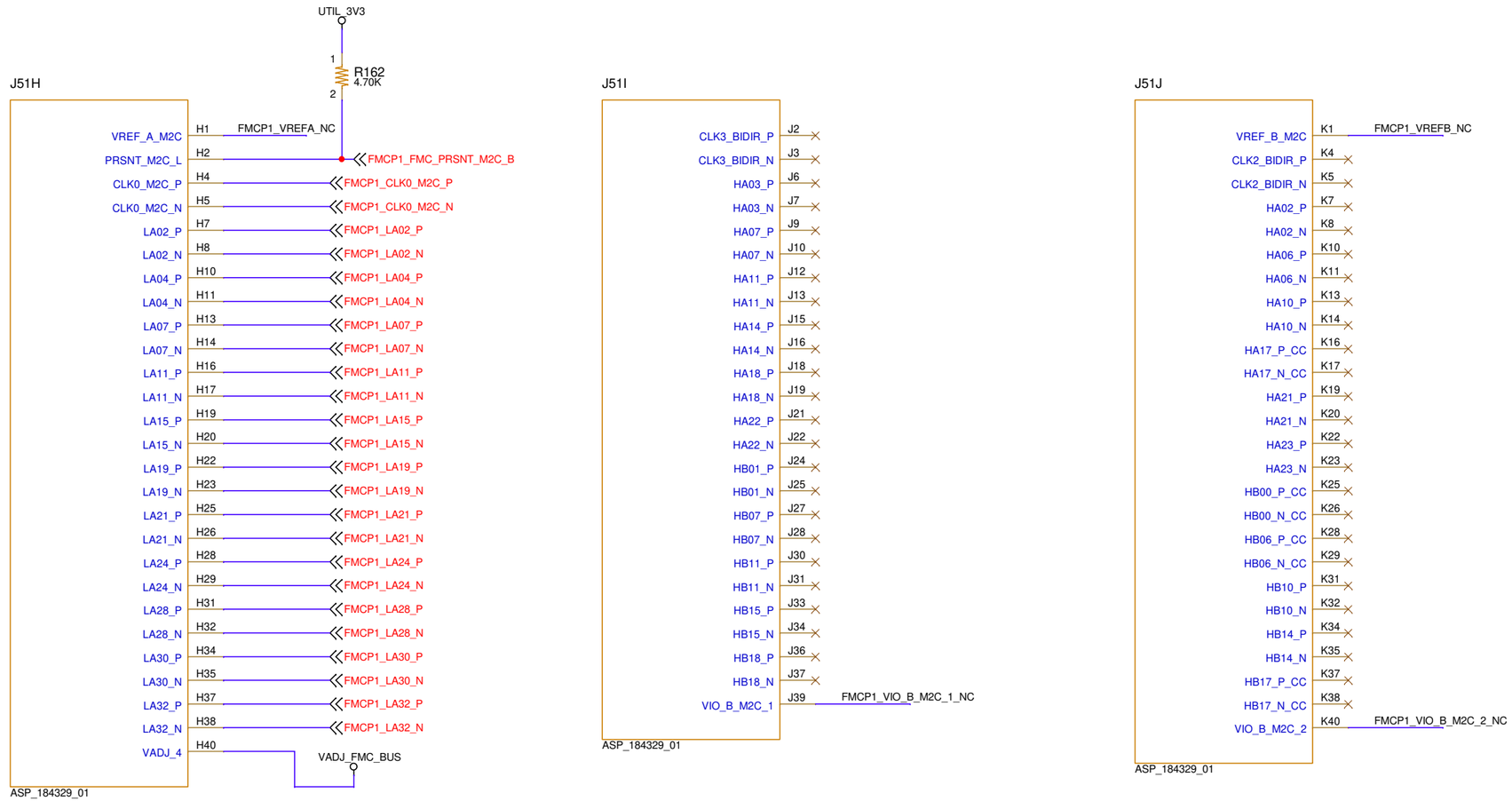

ANSI/VITA 57.4 - Draft OCT 2015

AECG
2100 LOGIC DRIVE
SAN JOSE CA

PAGE:	034 FMC1 HSPC Banks H-K
PAGE NUMBER:	34 OF 108
DOC NO:	038-05005-01
DATE: Thursday, June 22, 2023	REV: 13
SKU: VCK190	

CONFIDENTIAL AND PROPRIETARY TO ADVANCED MICRO DEVICES INC.
© 2021 Advanced Micro Devices
This AMD Board schematic and design is the exclusive property of AMD, and is provided only to entities under a non-disclosure agreement with AMD for evaluation purposes. Further distribution or disclosure is strictly prohibited. Use of this schematic and design for any purpose other than evaluation requires a Board Technology License Agreement with AMD. AMD makes no representations or warranties of any kind regarding this schematic and design, including, not limited to, any implied warranty of merchantability or fitness for a particular purpose, and disclaims responsibility for any consequences resulting from use of the information included herein.

TITLE: VCK190/VMK180

ANSI/VITA 57.4 - Draft OCT 2015

AMD

AECG
2100 LOGIC DRIVE
SAN JOSE CA

PAGE: **035 FMC1 HSPC Banks L M Y Z**

PAGE NUMBER: **35** OF **108**

DOC NO: **038-05005-01**

DATE: **Thursday, June 22, 2023** REV: **13**

SKU: **VCK190**

CONFIDENTIAL AND PROPRIETARY TO ADVANCED MICRO DEVICES INC.

© 2021 Advanced Micro Devices

This AMD Board schematic and design is the exclusive property of AMD, and is provided only to entities under a non-disclosure agreement with AMD for evaluation purposes. Further distribution or disclosure is strictly prohibited. Use of this schematic and design for any purpose other than evaluation requires a Board Technology License Agreement with AMD. AMD makes no representations or warranties of any kind regarding this schematic and design, including, not limited to, any implied warranty of merchantability or fitness for a particular purpose, and disclaims responsibility for any consequences resulting from use of the information included herein.

TITLE: **VCK190/VMK180**

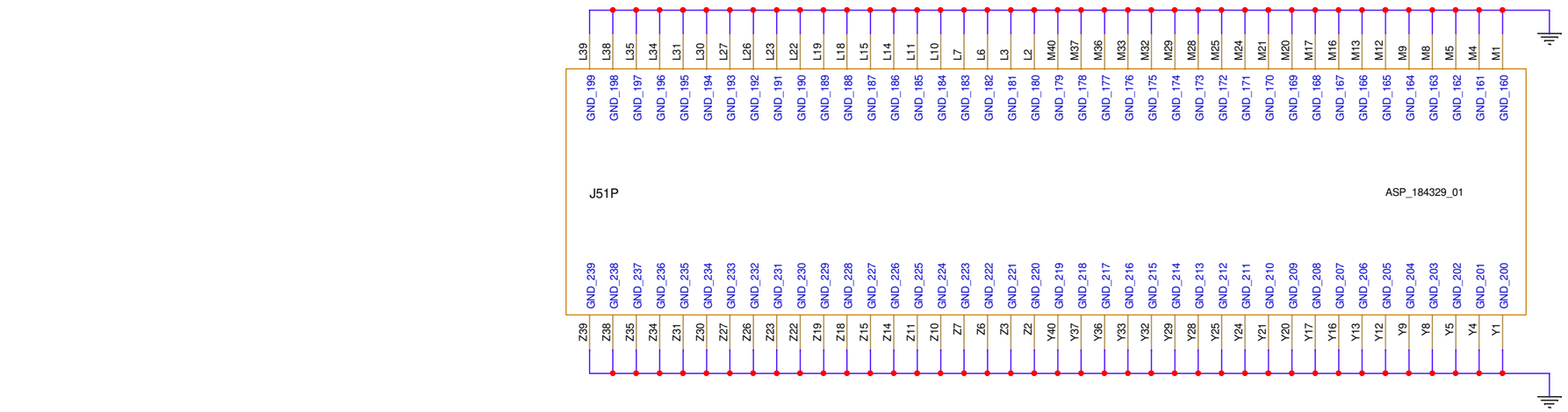

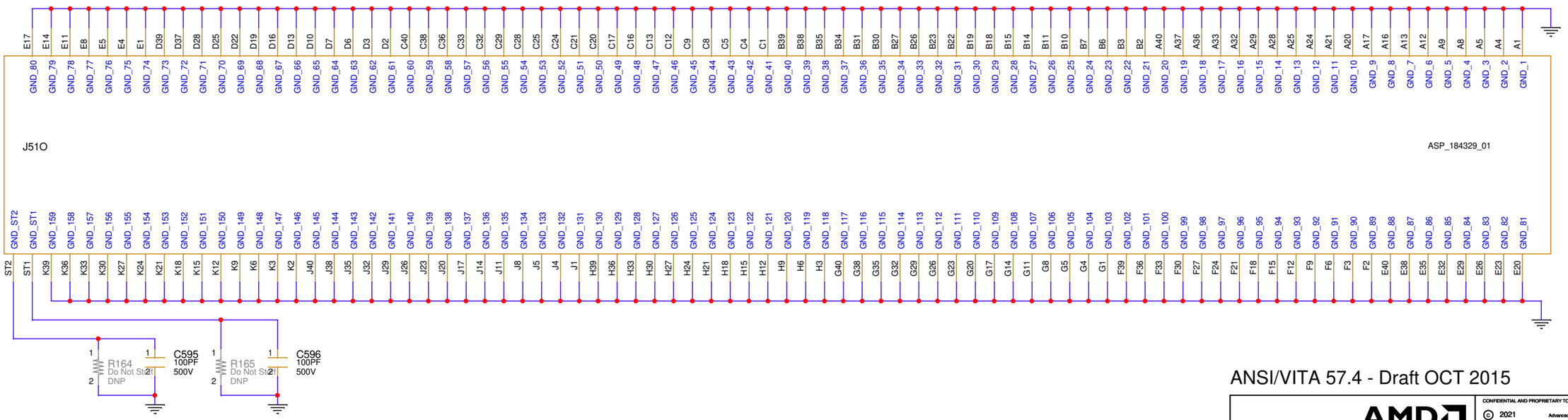

ANSI/VITA 57.4 - Draft OCT 2015

AMD

AECG
2100 LOGIC DRIVE
SAN JOSE CA

PAGE: 036 FMC1 HSPC GND	
PAGE NUMBER: 36 OF 108	
DOC NO: 038-05005-01	
DATE: Thursday, June 22, 2023	REV: 13
SKU: VCK190	

CONFIDENTIAL AND PROPRIETARY TO ADVANCED MICRO DEVICES INC.

© 2021 Advanced Micro Devices

This AMD Board schematic and design is the exclusive property of AMD, and is provided only to entities under a non-disclosure agreement with AMD for evaluation purposes. Further distribution or disclosure is strictly prohibited. Use of this schematic and design for any purpose other than evaluation requires a Board Technology License Agreement with AMD. AMD makes no representations or warranties of any kind regarding this schematic and design, including, not limited to, any implied warranty of merchantability or fitness for a particular purpose, and disclaims responsibility for any consequences resulting from use of the information included herein.

TITLE: VCK190/VMK180

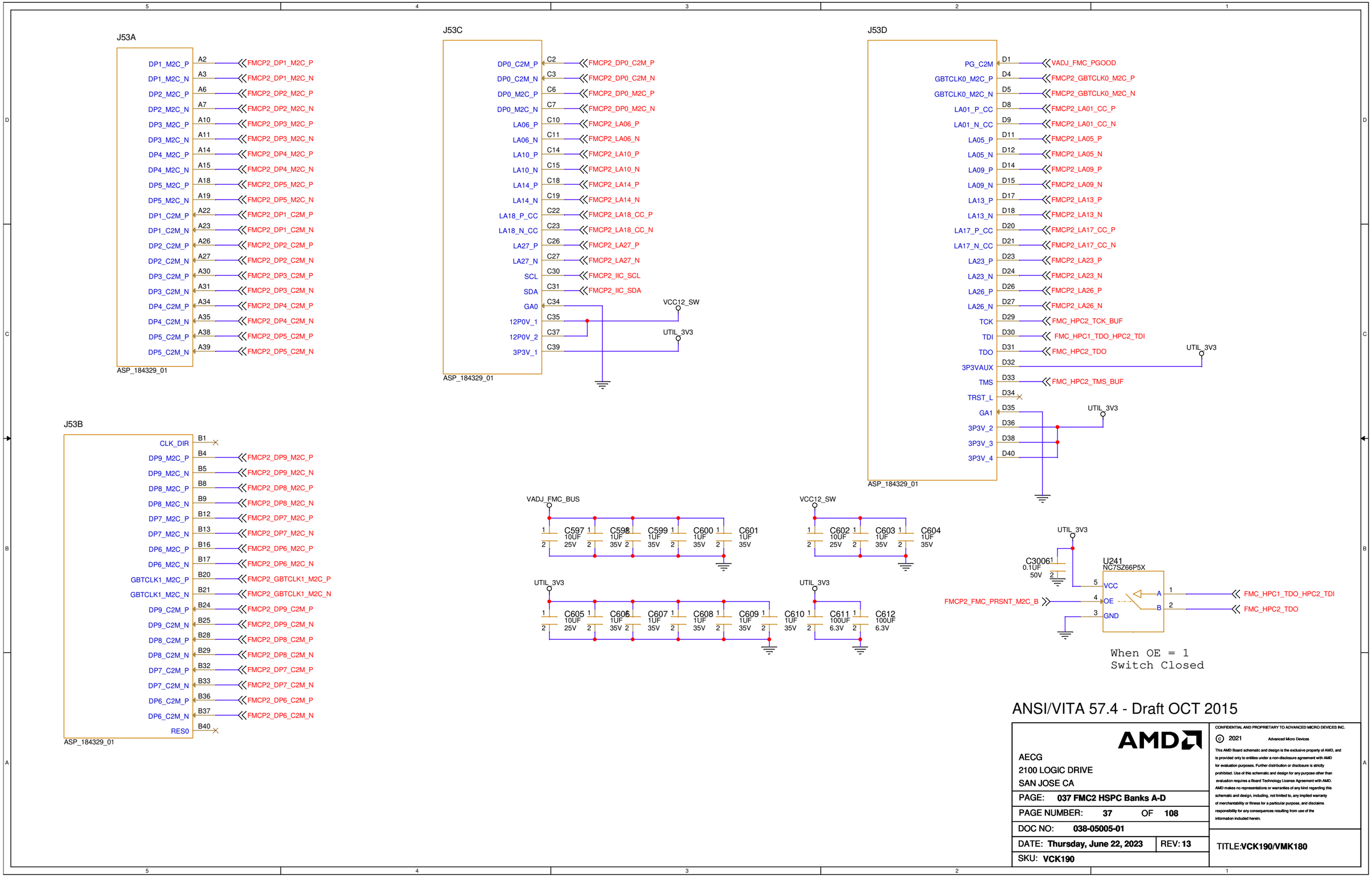

ANSI/VITA 57.4 - Draft OCT 2015

AMD

AECG
2100 LOGIC DRIVE
SAN JOSE CA

PAGE:	037 FMC2 HSPC Banks A-D
PAGE NUMBER:	37 OF 108
DOC NO:	038-05005-01
DATE: Thursday, June 22, 2023	REV: 13
SKU: VCK190	

CONFIDENTIAL AND PROPRIETARY TO ADVANCED MICRO DEVICES INC.
© 2021 Advanced Micro Devices
This AMD Board schematic and design is the exclusive property of AMD, and is provided only to entities under a non-disclosure agreement with AMD for evaluation purposes. Further distribution or disclosure is strictly prohibited. Use of this schematic and design for any purpose other than evaluation requires a Board Technology License Agreement with AMD. AMD makes no representations or warranties of any kind regarding this schematic and design, including, not limited to, any implied warranty of merchantability or fitness for a particular purpose, and disclaims responsibility for any consequences resulting from use of the information included herein.

TITLE: VCK190/VMK180

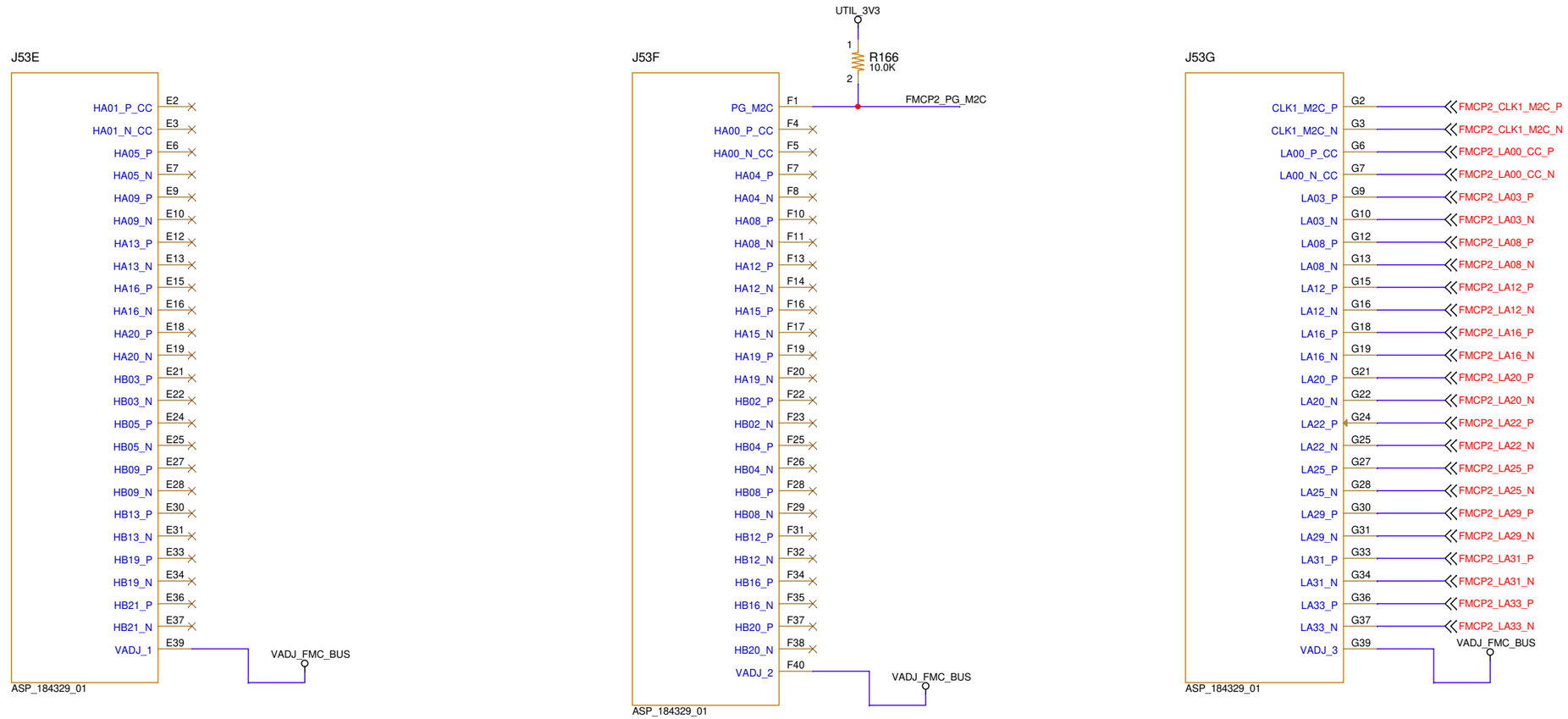

ANSI/VITA 57.4 - Draft OCT 2015

AMD

AECG
2100 LOGIC DRIVE
SAN JOSE CA

PAGE: **038 FMC2 HSPC Banks E-G**

PAGE NUMBER: **38** OF **108**

DOC NO: **038-05005-01**

DATE: **Thursday, June 22, 2023** REV: **13**

SKU: **VCK190**

CONFIDENTIAL AND PROPRIETARY TO ADVANCED MICRO DEVICES INC.

© 2021 Advanced Micro Devices

This AMD Board schematic and design is the exclusive property of AMD, and is provided only to entities under a non-disclosure agreement with AMD for evaluation purposes. Further distribution or disclosure is strictly prohibited. Use of this schematic and design for any purpose other than evaluation requires a Board Technology License Agreement with AMD. AMD makes no representations or warranties of any kind regarding this schematic and design, including, not limited to, any implied warranty of merchantability or fitness for a particular purpose, and disclaims responsibility for any consequences resulting from use of the information included herein.

TITLE:**VCK190/VMK180**

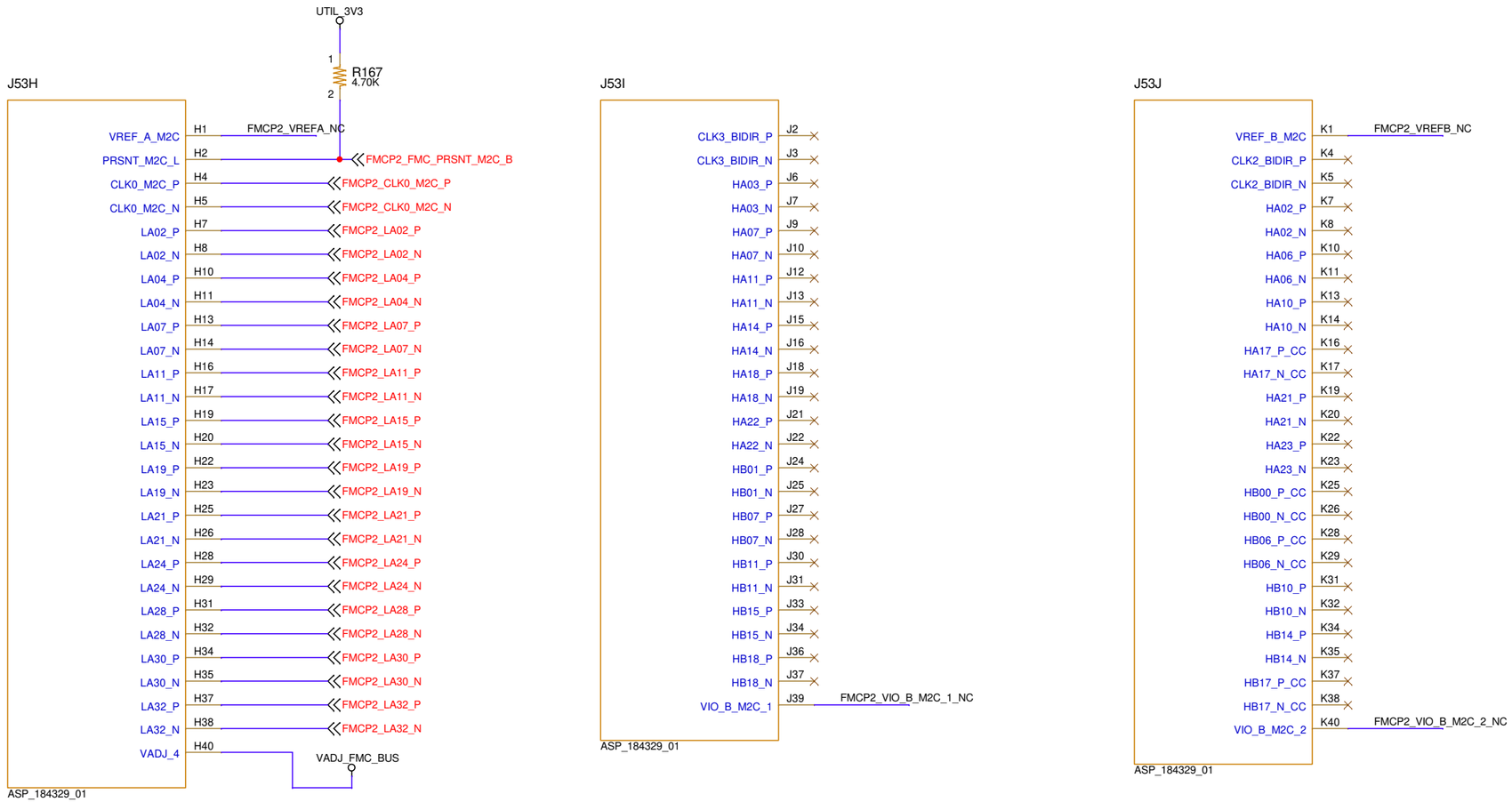

ANSI/VITA 57.4 - Draft OCT 2015

AECG
2100 LOGIC DRIVE
SAN JOSE CA

PAGE:	039 FMC2 HSPC Banks H-K
PAGE NUMBER:	39 OF 108
DOC NO:	038-05005-01
DATE: Thursday, June 22, 2023	REV: 13
SKU: VCK190	

CONFIDENTIAL AND PROPRIETARY TO ADVANCED MICRO DEVICES INC.
© 2021 Advanced Micro Devices
This AMD Board schematic and design is the exclusive property of AMD, and is provided only to entities under a non-disclosure agreement with AMD for evaluation purposes. Further distribution or disclosure is strictly prohibited. Use of this schematic and design for any purpose other than evaluation requires a Board Technology License Agreement with AMD. AMD makes no representations or warranties of any kind regarding this schematic and design, including, not limited to, any implied warranty of merchantability or fitness for a particular purpose, and disclaims responsibility for any consequences resulting from use of the information included herein.

TITLE: VCK190/VMK180

ANSI/VITA 57.4 - Draft OCT 2015

AMD

AECG
2100 LOGIC DRIVE
SAN JOSE CA

PAGE: **040 FMC2 HSPC Banks L M Y Z**

PAGE NUMBER: **40** OF **108**

DOC NO: **038-05005-01**

DATE: **Thursday, June 22, 2023** REV: **13**

SKU: **VCK190**

CONFIDENTIAL AND PROPRIETARY TO ADVANCED MICRO DEVICES INC.

© 2021 Advanced Micro Devices

This AMD Board schematic and design is the exclusive property of AMD, and is provided only to entities under a non-disclosure agreement with AMD for evaluation purposes. Further distribution or disclosure is strictly prohibited. Use of this schematic and design for any purpose other than evaluation requires a Board Technology License Agreement with AMD. AMD makes no representations or warranties of any kind regarding this schematic and design, including, not limited to, any implied warranty of merchantability or fitness for a particular purpose, and disclaims responsibility for any consequences resulting from use of the information included herein.

TITLE: **VCK190/VMK180**

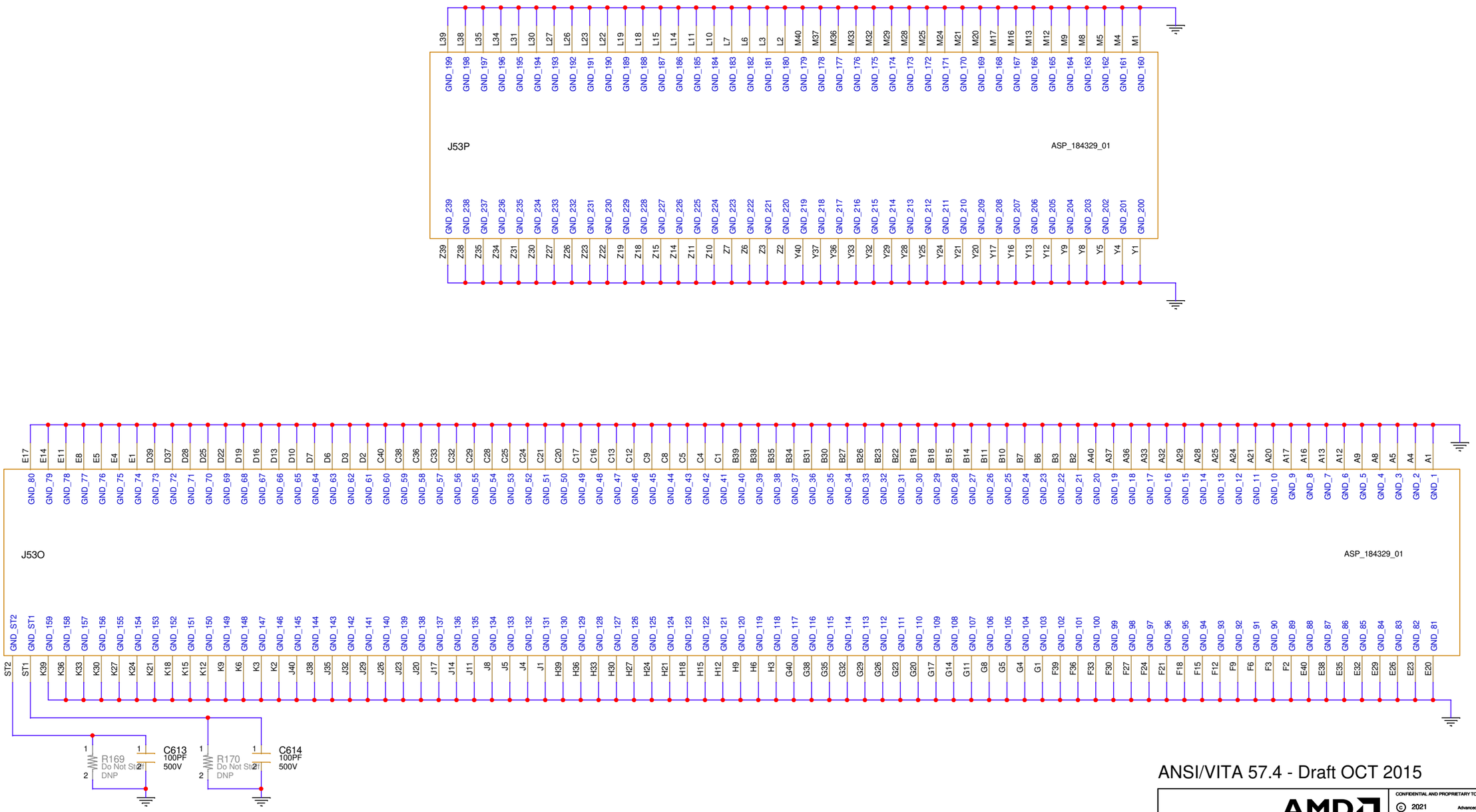

ANSI/VITA 57.4 - Draft OCT 2015

AMD

AECG
2100 LOGIC DRIVE
SAN JOSE CA

PAGE:	041 FMC2 HSPC GND
PAGE NUMBER:	41 OF 108
DOC NO:	038-05005-01
DATE: Thursday, June 22, 2023	REV: 13
SKU: VCK190	

CONFIDENTIAL AND PROPRIETARY TO ADVANCED MICRO DEVICES INC.
© 2021 Advanced Micro Devices
This AMD Board schematic and design is the exclusive property of AMD, and is provided only to entities under a non-disclosure agreement with AMD for evaluation purposes. Further distribution or disclosure is strictly prohibited. Use of this schematic and design for any purpose other than evaluation requires a Board Technology License Agreement with AMD. AMD makes no representations or warranties of any kind regarding this schematic and design, including, not limited to, any implied warranty of merchantability or fitness for a particular purpose, and disclaims responsibility for any consequences resulting from use of the information included herein.

TITLE: VCK190/VMK180

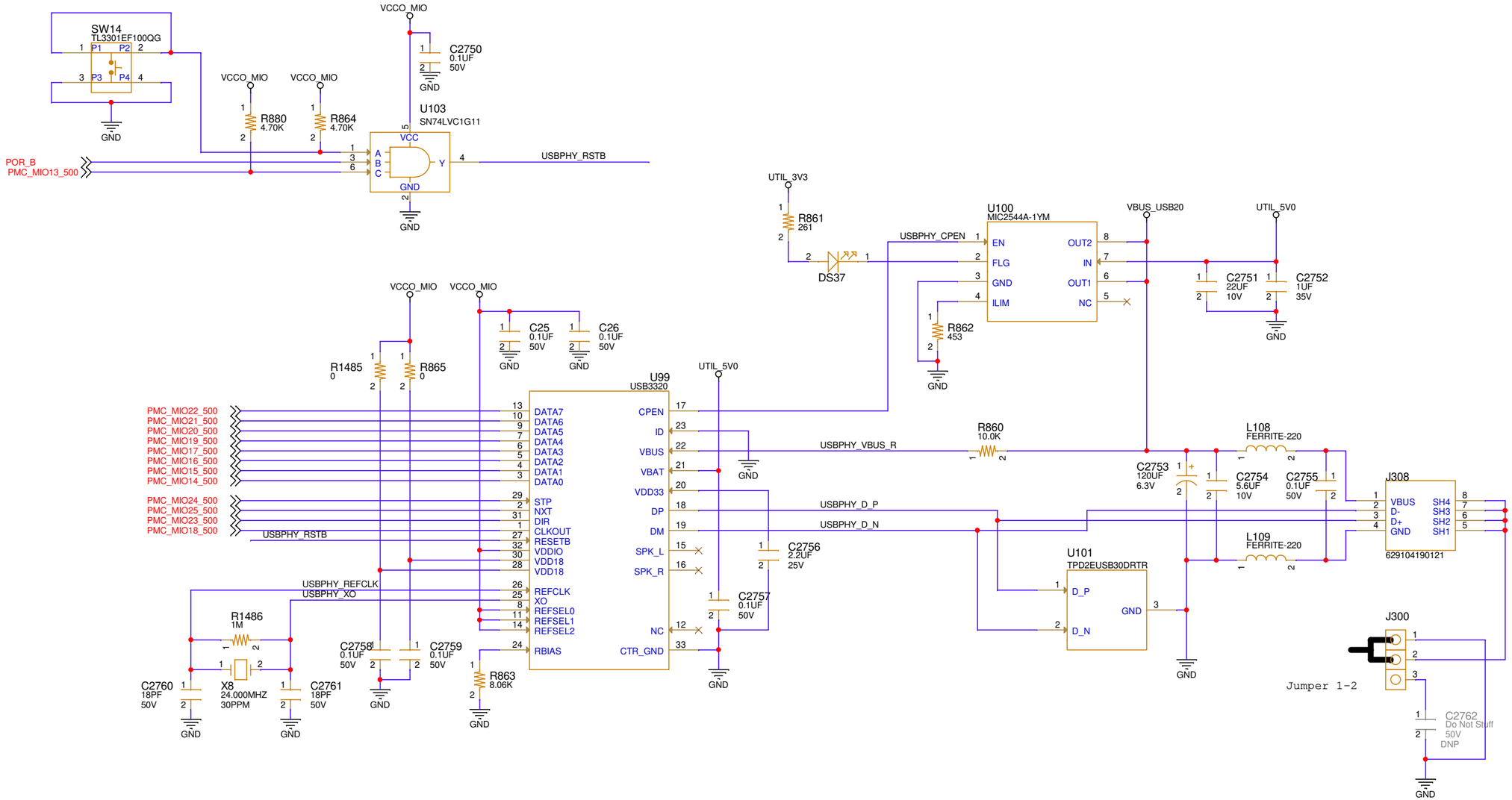

AECG
2100 LOGIC DRIVE
SAN JOSE CA

PAGE:	042 SMSC3320 UPLI USB
PAGE NUMBER:	42 OF 108
DOC NO:	038-05005-01
DATE: Thursday, June 22, 2023	REV: 13
SKU: VCK190	

CONFIDENTIAL AND PROPRIETARY TO ADVANCED MICRO DEVICES INC.
© 2021 Advanced Micro Devices
This AMD Board schematic and design is the exclusive property of AMD, and is provided only to entities under a non-disclosure agreement with AMD for evaluation purposes. Further distribution or disclosure is strictly prohibited. Use of this schematic and design for any purpose other than evaluation requires a Board Technology License Agreement with AMD. AMD makes no representations or warranties of any kind regarding this schematic and design, including, not limited to, any implied warranty of merchantability or fitness for a particular purpose, and disclaims responsibility for any consequences resulting from use of the information included herein.

TITLE: VCK190/VMK180

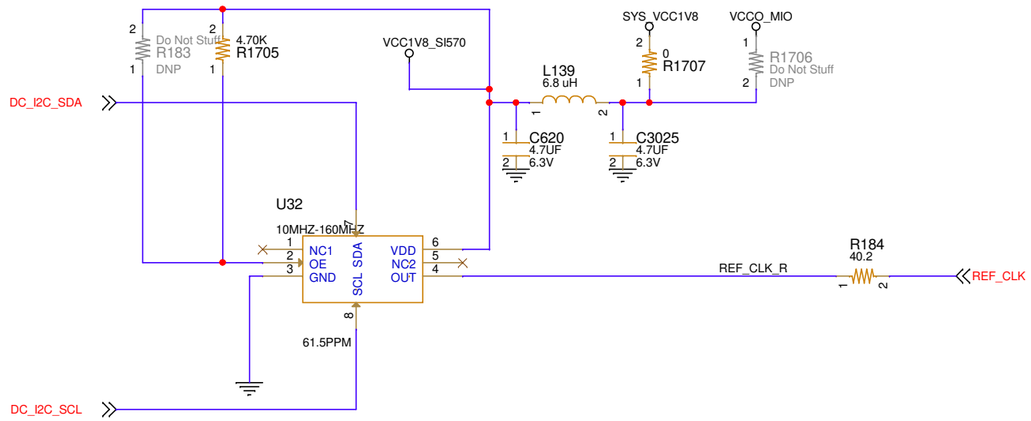

33.333333... (33 + 1/3 MHz)

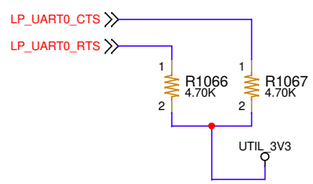

Not used becsue of I2C Mapping on Tenzing

AECG
2100 LOGIC DRIVE
SAN JOSE CA

PAGE: **043 System Clock and UART0**

PAGE NUMBER: **43** OF **108**

DOC NO: **038-05005-01**

DATE: **Thursday, June 22, 2023** REV: **13**

SKU: **VCK190**

CONFIDENTIAL AND PROPRIETARY TO ADVANCED MICRO DEVICES INC.

© 2021 Advanced Micro Devices

This AMD Board schematic and design is the exclusive property of AMD, and is provided only to entities under a non-disclosure agreement with AMD for evaluation purposes. Further distribution or disclosure is strictly prohibited. Use of this schematic and design for any purpose other than evaluation requires a Board Technology License Agreement with AMD. AMD makes no representations or warranties of any kind regarding this schematic and design, including, not limited to, any implied warranty of merchantability or fitness for a particular purpose, and disclaims responsibility for any consequences resulting from use of the information included herein.

TITLE:**VCK190/VMK180**

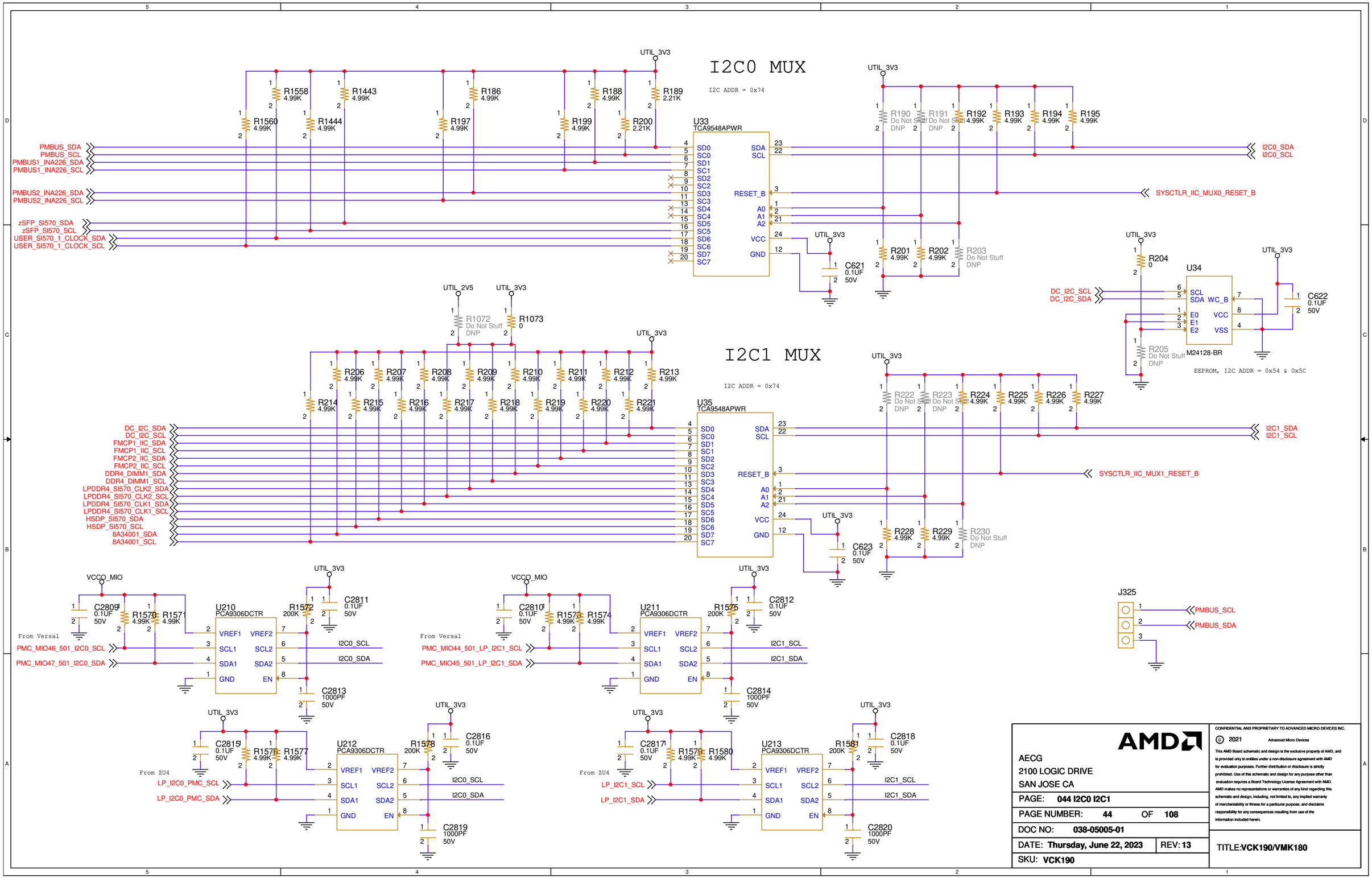
I2C0 MUX
I2C ADDR = 0x74
U33
TCA9548APWR
PMBUS_SDA
PMBUS_SCL
PMBUS1_INA226_SDA
PMBUS1_INA226_SCL
PMBUS2_INA226_SDA
PMBUS2_INA226_SCL
zSFP_SI570_SDA
zSFP_SI570_SCL
USER_SI570_1_CLOCK_SDA
USER_SI570_1_CLOCK_SCL
I2C0_SDA
I2C0_SCL
SYSCTLR_IIC_MUX0_RESET_B
UTIL_3V3
R1558 4.99K
R1443 4.99K
R186 4.99K
R188 4.99K
R189 2.21K
R1560 4.99K
R1444 4.99K
R197 4.99K
R199 4.99K
R200 2.21K
R190 Do Not Stuff DNP
R191 Do Not Stuff DNP
R192 4.99K
R193 4.99K
R194 4.99K
R195 4.99K
R201 4.99K
R202 4.99K
R203 Do Not Stuff DNP
C621 0.1UF 50V
R204 0
U34
M24128-BR
DC_I2C_SCL
DC_I2C_SDA
C622 0.1UF 50V
R205 Do Not Stuff DNP
EEPROM, I2C ADDR = 0x54 & 0x5C
I2C1 MUX
I2C ADDR = 0x74
U35
TCA9548APWR
UTIL_2V5
R1072 Do Not Stuff DNP
R1073 0
R206 4.99K
R207 4.99K
R208 4.99K
R209 4.99K
R210 4.99K
R211 4.99K
R212 4.99K
R213 4.99K
R214 4.99K
R215 4.99K
R216 4.99K
R217 4.99K
R218 4.99K
R219 4.99K
R220 4.99K
R221 4.99K
DC_I2C_SDA
DC_I2C_SCL
FMCP1_IIC_SDA
FMCP1_IIC_SCL
FMCP2_IIC_SDA
FMCP2_IIC_SCL
DDR4_DIMM1_SDA
DDR4_DIMM1_SCL
LPDDR4_SI570_CLK2_SDA
LPDDR4_SI570_CLK2_SCL
LPDDR4_SI570_CLK1_SDA
LPDDR4_SI570_CLK1_SCL
HSDP_SI570_SDA
HSDP_SI570_SCL
8A34001_SDA
8A34001_SCL
I2C1_SDA
I2C1_SCL
SYSCTLR_IIC_MUX1_RESET_B
R222 Do Not Stuff DNP
R223 Do Not Stuff DNP
R224 4.99K
R225 4.99K
R226 4.99K
R227 4.99K
R228 4.99K
R229 4.99K
R230 Do Not Stuff DNP
C623 0.1UF 50V
VCCO_MIO
C2809 0.1UF 50V
R1570 4.99K
R1571 4.99K
U210
PCA9306DCTR
R1572 200K
C2811 0.1UF 50V
From Versal
PMC_MIO46_501_I2C0_SCL
PMC_MIO47_501_I2C0_SDA
C2813 1000PF 50V
C2810 0.1UF 50V
R1573 4.99K
R1574 4.99K
U211
R1575 200K
C2812 0.1UF 50V
PMC_MIO44_501_LP_I2C1_SCL
PMC_MIO45_501_LP_I2C1_SDA
C2814 1000PF 50V
J325
PMBUS_SCL
PMBUS_SDA
C2815 0.1UF 50V
R1576 4.99K
R1577 4.99K
U212
R1578 200K
C2816 0.1UF 50V
From ZU4
LP_I2C0_PMC_SCL
LP_I2C0_PMC_SDA
C2819 1000PF 50V
C2817 0.1UF 50V
R1579 4.99K
R1580 4.99K
U213
R1581 200K
C2818 0.1UF 50V
LP_I2C1_SCL
LP_I2C1_SDA
C2820 1000PF 50V
VREF1
VREF2
SCL1
SCL2
SDA1
SDA2
GND
EN
SD0
SC0
SD1
SC1
SD2
SC2
SD3
SC3
SD4
SC4
SD5
SC5
SD6
SC6
SD7
SC7
SDA
SCL
RESET_B
A0
A1
A2
VCC
GND
AECG
2100 LOGIC DRIVE
SAN JOSE CA
PAGE: 044 I2C0 I2C1
PAGE NUMBER: 44 OF 108
DOC NO: 038-05005-01
DATE: Thursday, June 22, 2023
REV: 13
SKU: VCK190
TITLE: VCK190/VMK180
CONFIDENTIAL AND PROPRIETARY TO ADVANCED MICRO DEVICES INC.
© 2021 Advanced Micro Devices
This AMD Board schematic and design is the exclusive property of AMD, and is provided only to entities under a non-disclosure agreement with AMD for evaluation purposes. Further distribution or disclosure is strictly prohibited. Use of this schematic and design for any purpose other than evaluation requires a Board Technology License Agreement with AMD. AMD makes no representations or warranties of any kind regarding this schematic and design, including, not limited to, any implied warranty of merchantability or fitness for a particular purpose, and disclaims responsibility for any consequences resulting from use of the information included herein.

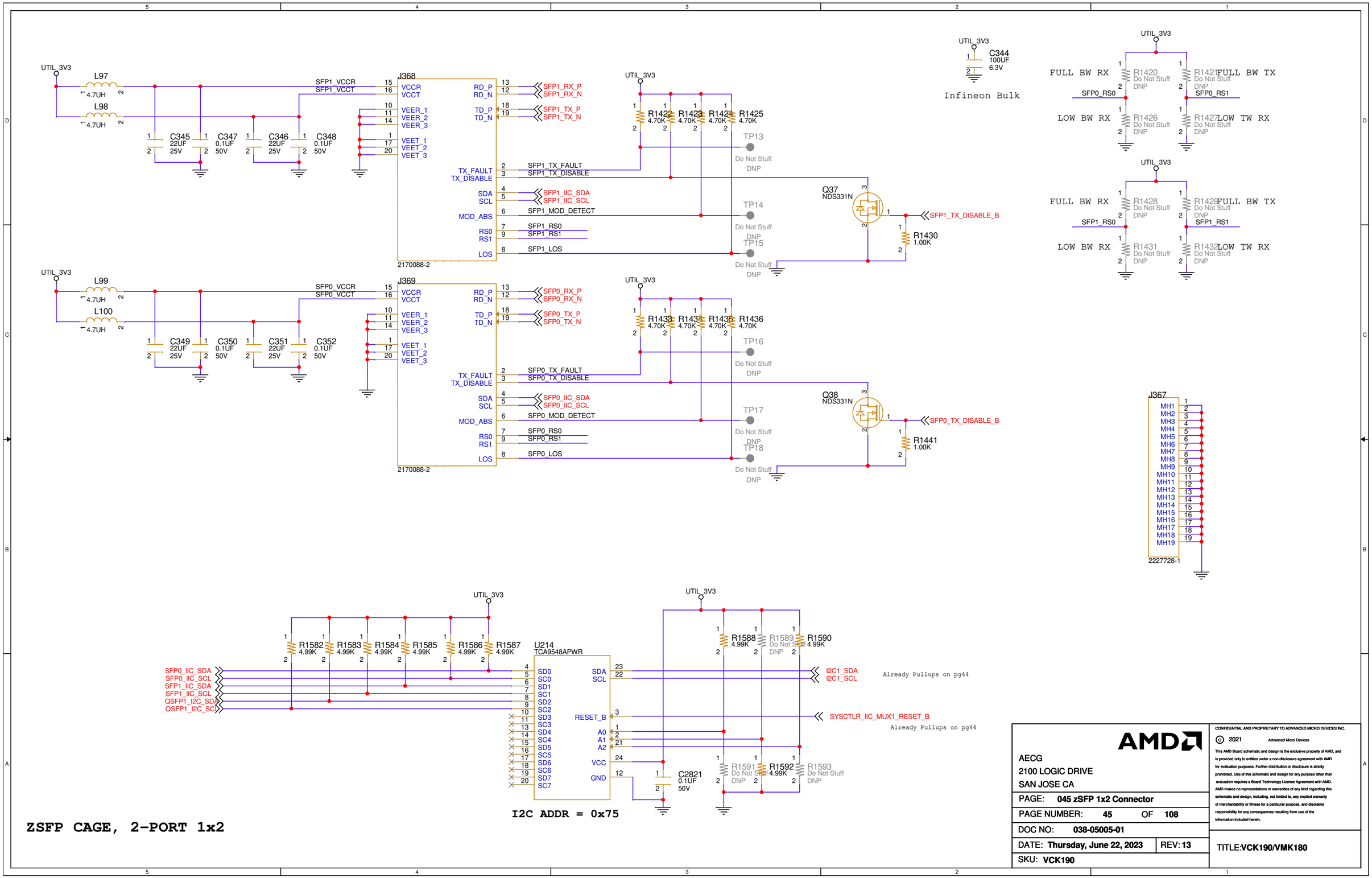

AECG
2100 LOGIC DRIVE
SAN JOSE CA

PAGE: **045 zSFP 1x2 Connector**

PAGE NUMBER: **45** OF **108**

DOC NO: **038-05005-01**

DATE: **Thursday, June 22, 2023** REV: **13**

SKU: **VCK190**

CONFIDENTIAL AND PROPRIETARY TO ADVANCED MICRO DEVICES INC.

© 2021 Advanced Micro Devices

This AMD Board schematic and design is the exclusive property of AMD, and is provided only to entities under a non-disclosure agreement with AMD for evaluation purposes. Further distribution or disclosure is strictly prohibited. Use of this schematic and design for any purpose other than evaluation requires a Board Technology License Agreement with AMD. AMD makes no representations or warranties of any kind regarding this schematic and design, including, not limited to, any implied warranty of merchantability or fitness for a particular purpose, and disclaims responsibility for any consequences resulting from use of the information included herein.

TITLE: **VCK190/VMK180**

PCIE X8 FINGER EDGE

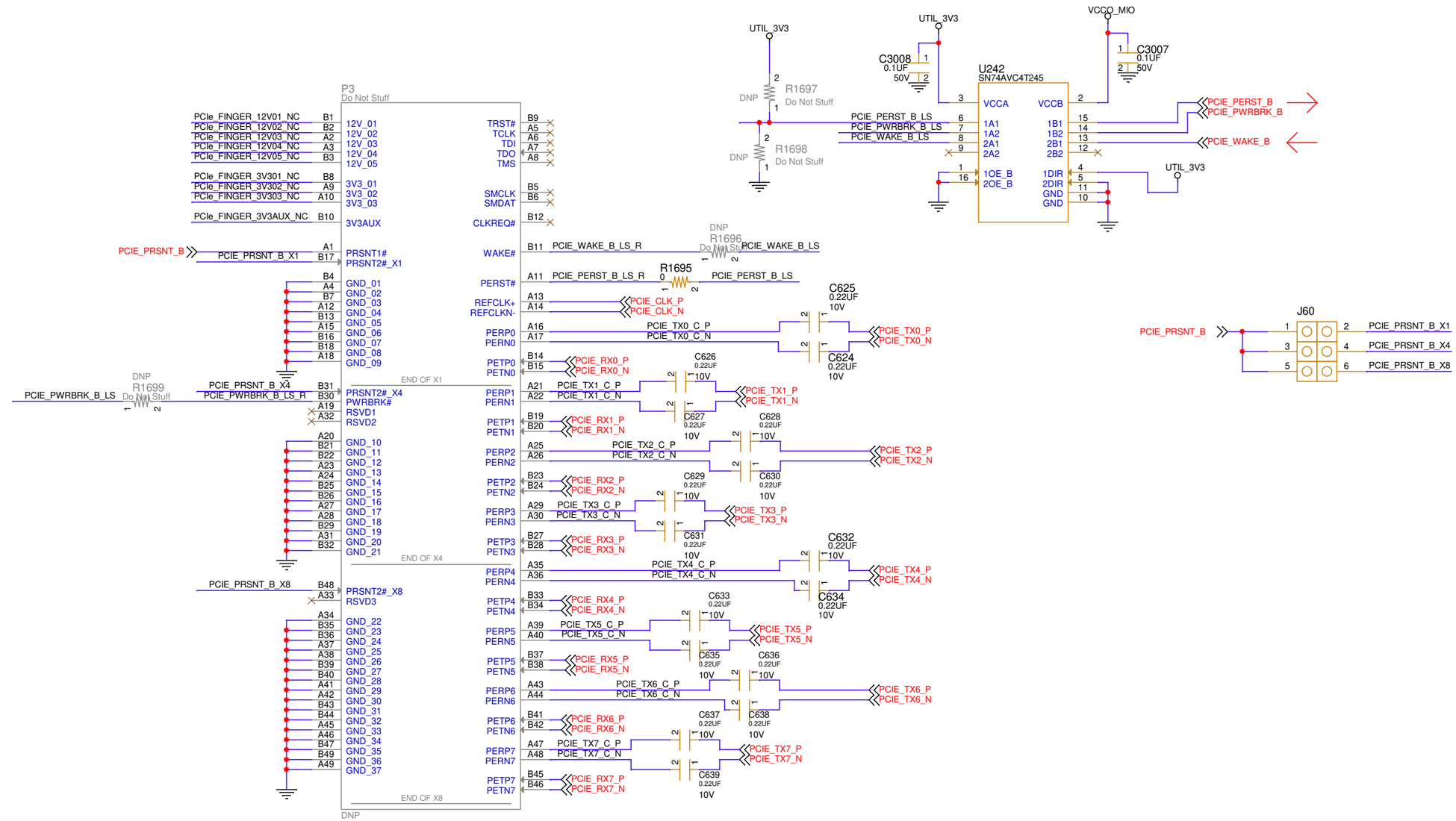

Bracket Mounting Holes

AECG
2100 LOGIC DRIVE
SAN JOSE CA

PAGE:	046 PCIe End Point
PAGE NUMBER:	46 OF 108
DOC NO:	038-05005-01
DATE:	Thursday, June 22, 2023 REV: 13
SKU:	VCK190

CONFIDENTIAL AND PROPRIETARY TO ADVANCED MICRO DEVICES INC.
© 2021 Advanced Micro Devices
This AMD Board schematic and design is the exclusive property of AMD, and is provided only to entities under a non-disclosure agreement with AMD for evaluation purposes. Further distribution or disclosure is strictly prohibited. Use of this schematic and design for any purpose other than evaluation requires a Board Technology License Agreement with AMD. AMD makes no representations or warranties of any kind regarding this schematic and design, including, not limited to, any implied warranty of merchantability or fitness for a particular purpose, and disclaims responsibility for any consequences resulting from use of the information included herein.

TITLE: VCK190/VMK180

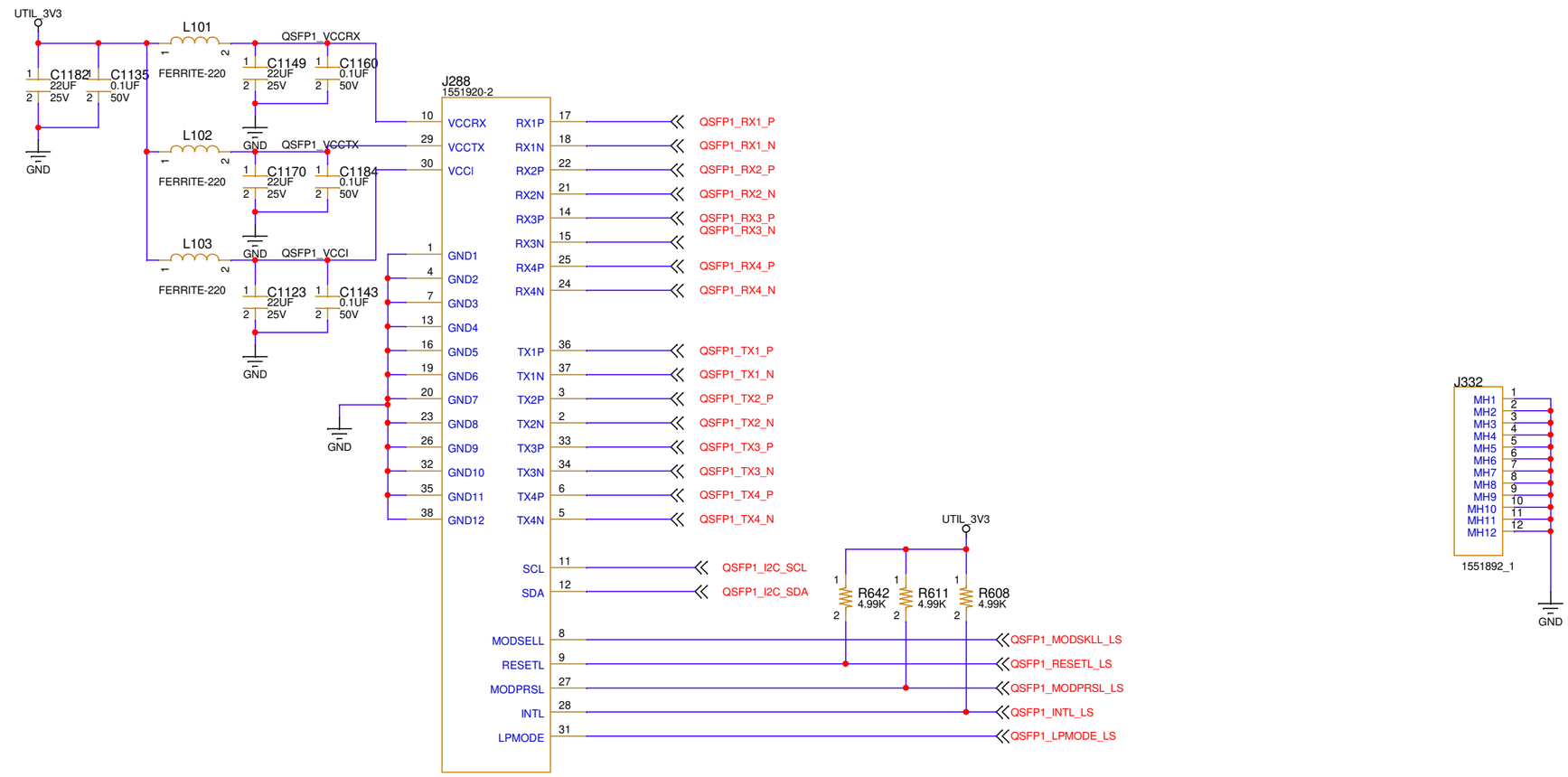

AECG
2100 LOGIC DRIVE
SAN JOSE CA

PAGE: **047 zQSFP 1x1 Connector**

PAGE NUMBER: **47** OF **108**

DOC NO: **038-05005-01**

DATE: **Thursday, June 22, 2023** REV: **13**

SKU: **VCK190**

CONFIDENTIAL AND PROPRIETARY TO ADVANCED MICRO DEVICES INC.

© 2021 Advanced Micro Devices

This AMD Board schematic and design is the exclusive property of AMD, and is provided only to entities under a non-disclosure agreement with AMD for evaluation purposes. Further distribution or disclosure is strictly prohibited. Use of this schematic and design for any purpose other than evaluation requires a Board Technology License Agreement with AMD. AMD makes no representations or warranties of any kind regarding this schematic and design, including, not limited to, any implied warranty of merchantability or fitness for a particular purpose, and disclaims responsibility for any consequences resulting from use of the information included herein.

TITLE: **VCK190/VMK180**

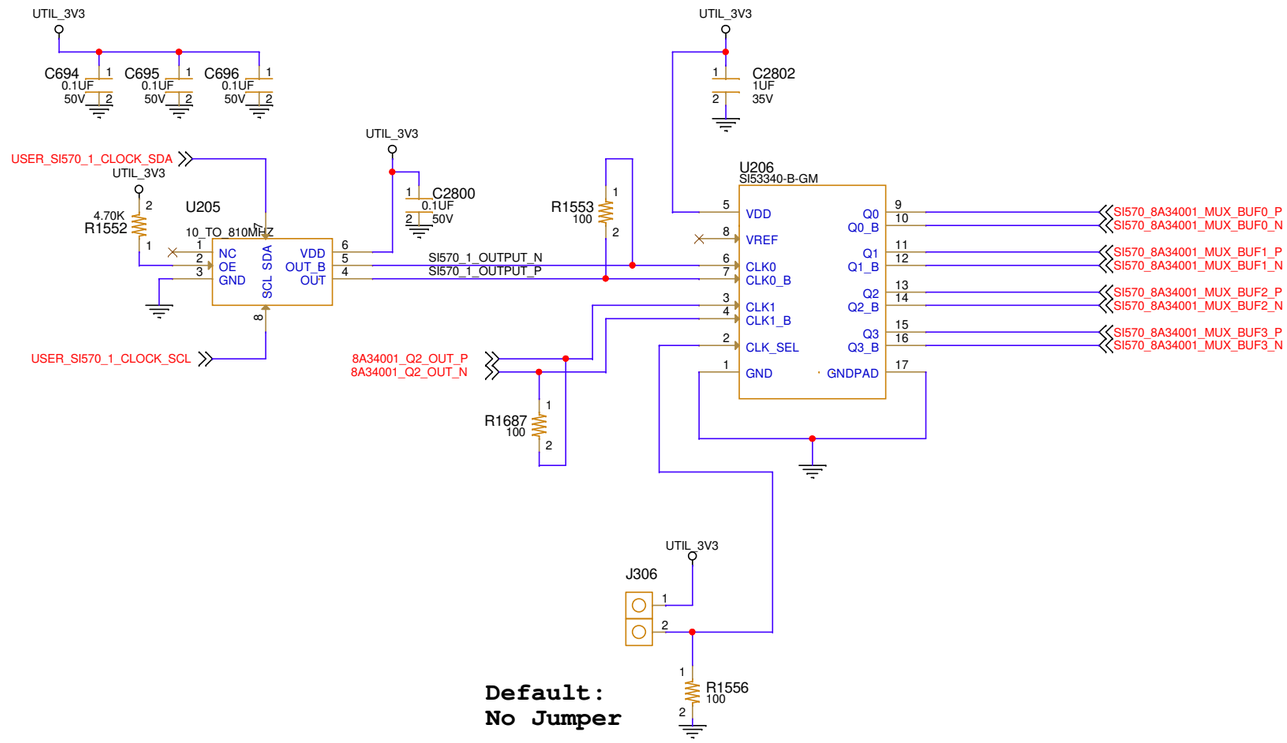

AECG
2100 LOGIC DRIVE
SAN JOSE CA

PAGE:	048 MGT (FMC) Clocking 2
PAGE NUMBER:	48 OF 108
DOC NO:	038-05005-01
DATE: Thursday, June 22, 2023	REV: 13
SKU: VCK190	

CONFIDENTIAL AND PROPRIETARY TO ADVANCED MICRO DEVICES INC.
© 2021 Advanced Micro Devices
This AMD Board schematic and design is the exclusive property of AMD, and is provided only to entities under a non-disclosure agreement with AMD for evaluation purposes. Further distribution or disclosure is strictly prohibited. Use of this schematic and design for any purpose other than evaluation requires a Board Technology License Agreement with AMD. AMD makes no representations or warranties of any kind regarding this schematic and design, including, not limited to, any implied warranty of merchantability or fitness for a particular purpose, and disclaims responsibility for any consequences resulting from use of the information included herein.

TITLE: VCK190/VMK180

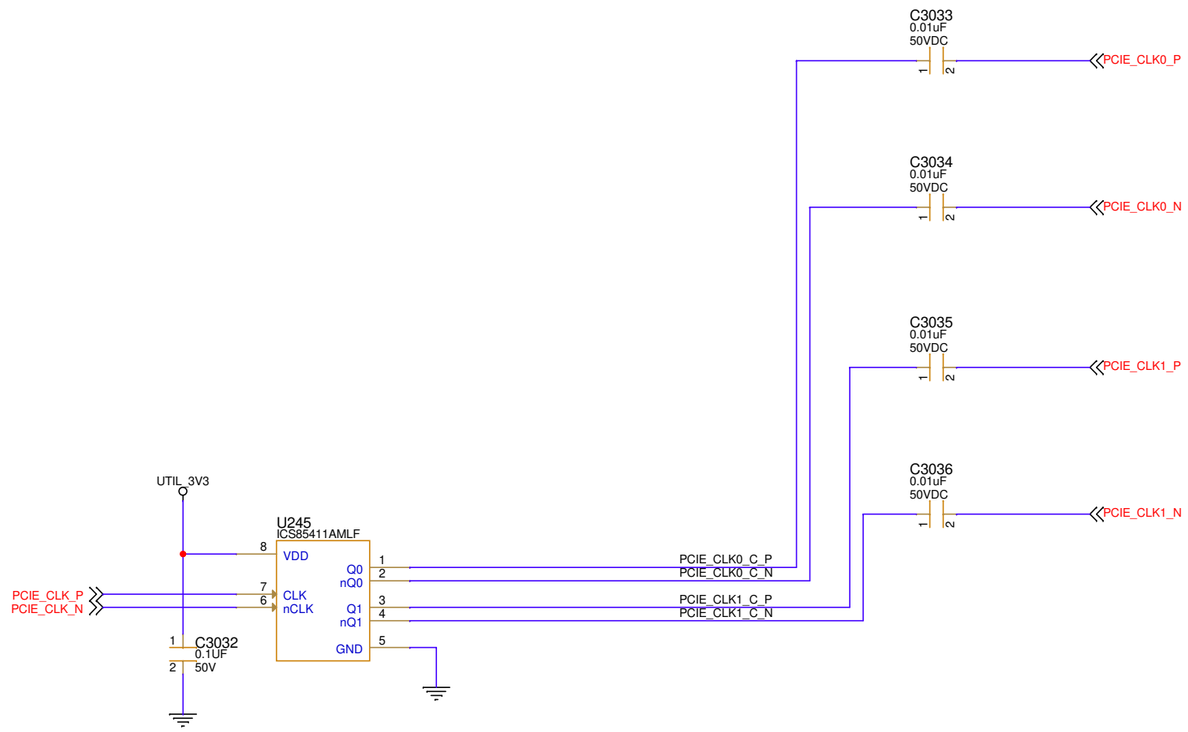

AECG
2100 LOGIC DRIVE
SAN JOSE CA

PAGE: **049 MGT Clocking 3**

PAGE NUMBER: **49** OF **108**

DOC NO: **038-05005-01**

DATE: **Thursday, June 22, 2023** REV: **13**

SKU: **VCK190**

CONFIDENTIAL AND PROPRIETARY TO ADVANCED MICRO DEVICES INC.

© 2021 Advanced Micro Devices

This AMD Board schematic and design is the exclusive property of AMD, and is provided only to entities under a non-disclosure agreement with AMD for evaluation purposes. Further distribution or disclosure is strictly prohibited. Use of this schematic and design for any purpose other than evaluation requires a Board Technology License Agreement with AMD. AMD makes no representations or warranties of any kind regarding this schematic and design, including, not limited to, any implied warranty of merchantability or fitness for a particular purpose, and disclaims responsibility for any consequences resulting from use of the information included herein.

TITLE: **VCK190/VMK180**

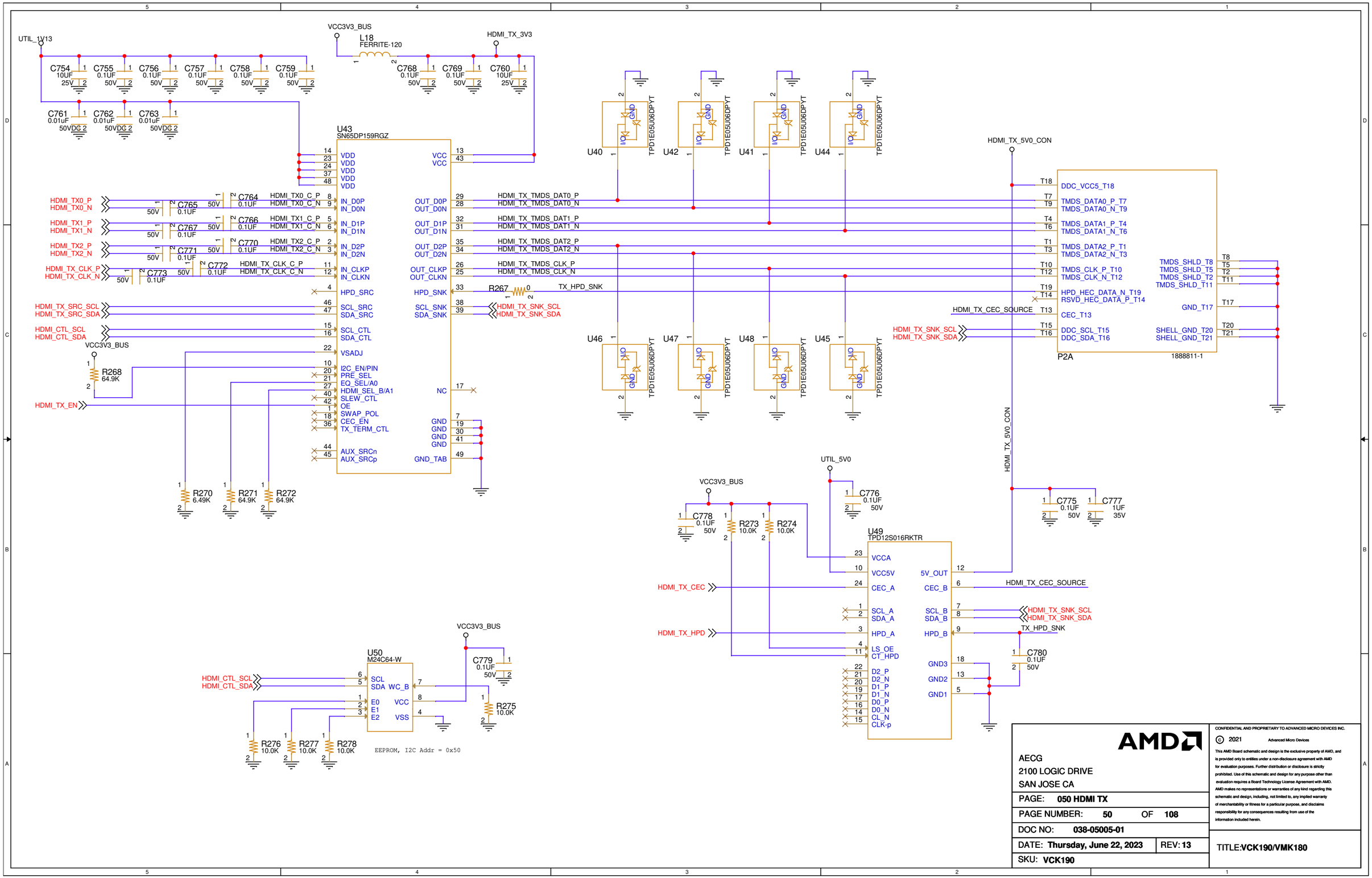

AECG
2100 LOGIC DRIVE
SAN JOSE CA

PAGE:	050 HDMI TX
PAGE NUMBER:	50 OF 108
DOC NO:	038-05005-01
DATE: Thursday, June 22, 2023	REV: 13
SKU: VCK190	

CONFIDENTIAL AND PROPRIETARY TO ADVANCED MICRO DEVICES INC.
© 2021 Advanced Micro Devices
This AMD Board schematic and design is the exclusive property of AMD, and is provided only to entities under a non-disclosure agreement with AMD for evaluation purposes. Further distribution or disclosure is strictly prohibited. Use of this schematic and design for any purpose other than evaluation requires a Board Technology License Agreement with AMD. AMD makes no representations or warranties of any kind regarding this schematic and design, including, not limited to, any implied warranty of merchantability or fitness for a particular purpose, and disclaims responsibility for any consequences resulting from use of the information included herein.

TITLE: VCK190/VMK180

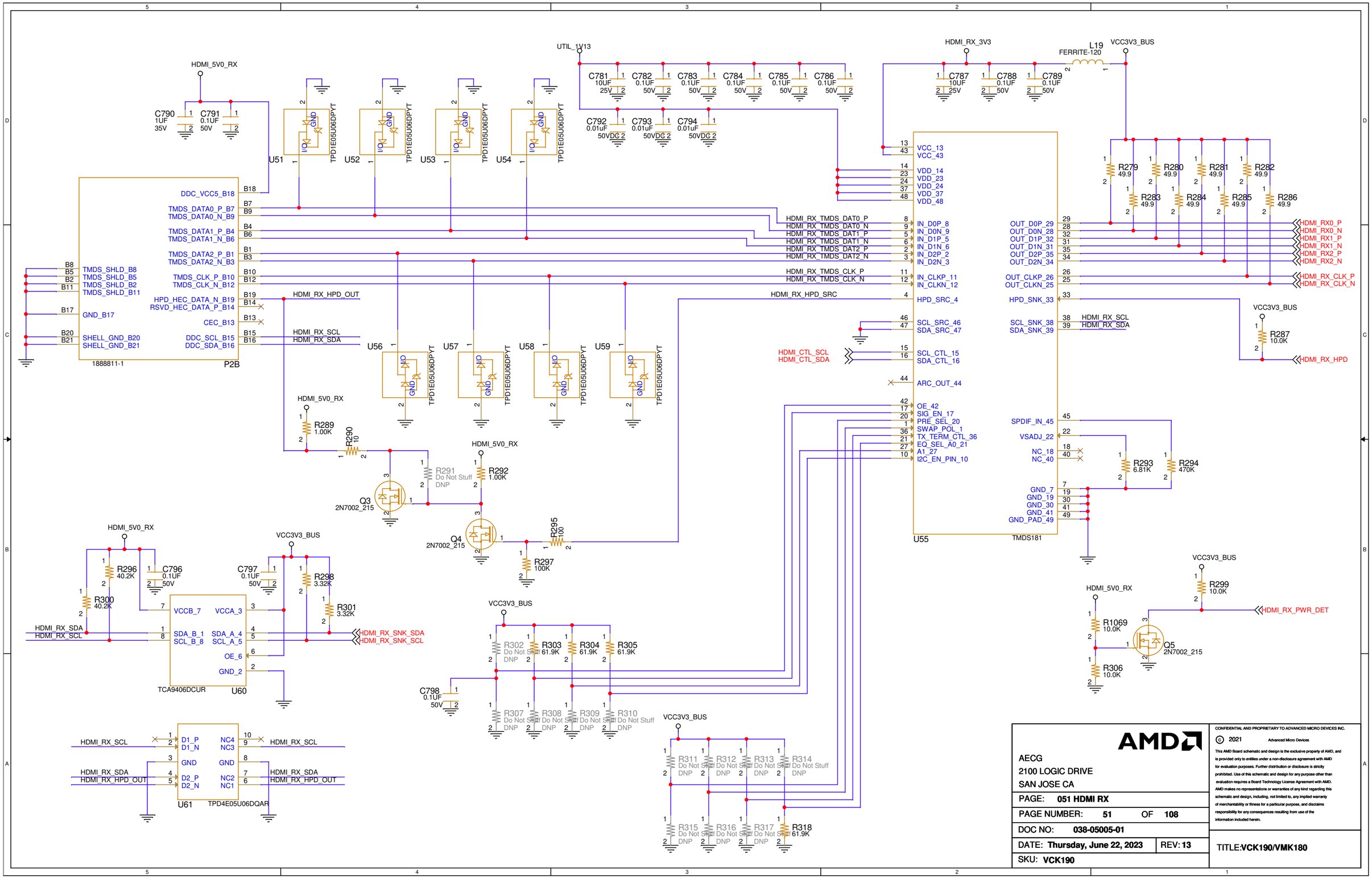

AMD

AECG
2100 LOGIC DRIVE
SAN JOSE CA

PAGE:	051 HDMI RX
PAGE NUMBER:	51 OF 108
DOC NO:	038-05005-01
DATE: Thursday, June 22, 2023	REV: 13
SKU: VCK190	

CONFIDENTIAL AND PROPRIETARY TO ADVANCED MICRO DEVICES INC.
© 2021 Advanced Micro Devices
This AMD Board schematic and design is the exclusive property of AMD, and is provided only to entities under a non-disclosure agreement with AMD for evaluation purposes. Further distribution or disclosure is strictly prohibited. Use of this schematic and design for any purpose other than evaluation requires a Board Technology License Agreement with AMD. AMD makes no representations or warranties of any kind regarding this schematic and design, including, not limited to, any implied warranty of merchantability or fitness for a particular purpose, and disclaims responsibility for any consequences resulting from use of the information included herein.

TITLE: VCK190/VMK180

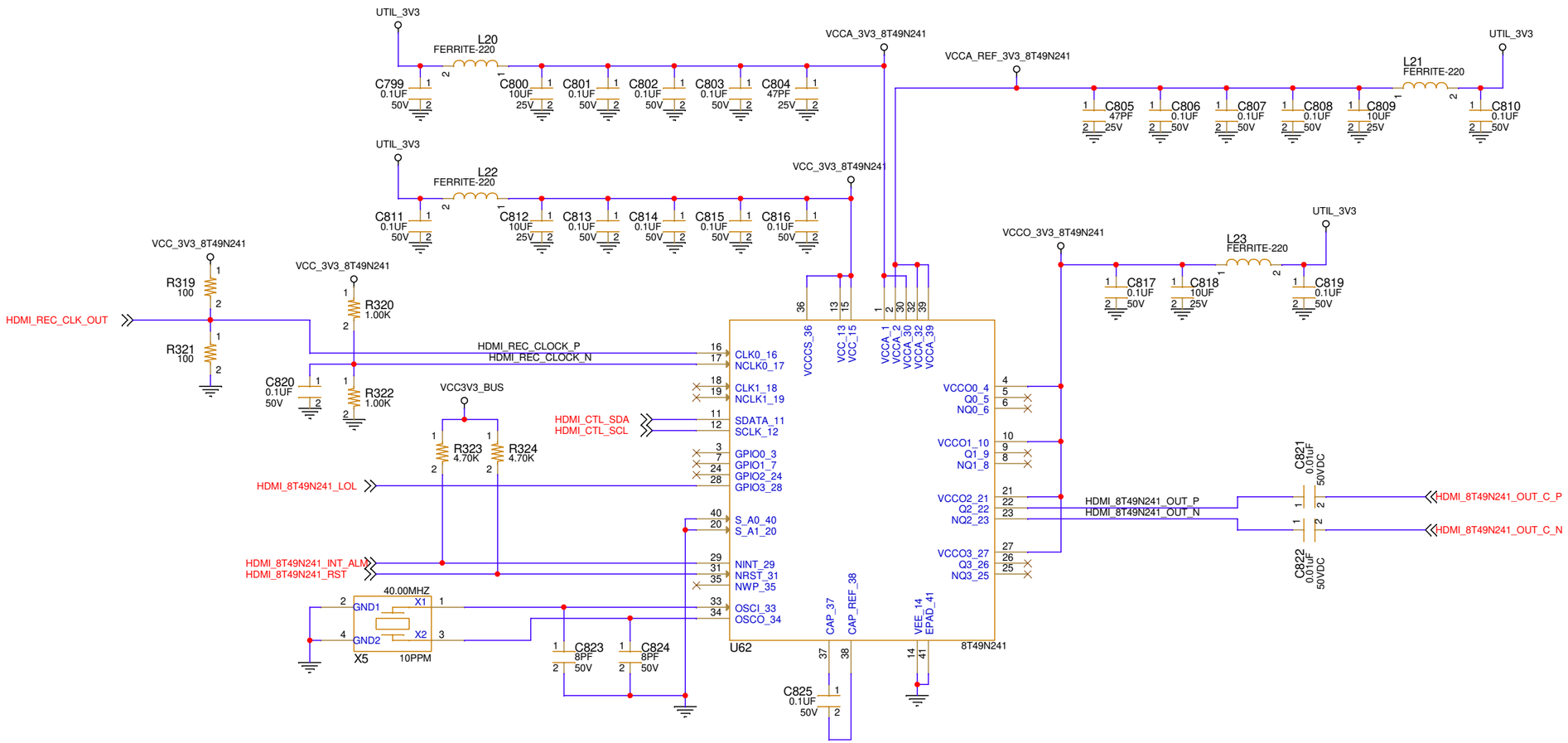

AMD

AECG
2100 LOGIC DRIVE
SAN JOSE CA

PAGE: **052 HDMI Clocking**

PAGE NUMBER: **52** OF **108**

DOC NO: **038-05005-01**

DATE: **Thursday, June 22, 2023** REV: **13**

SKU: **VCK190**

CONFIDENTIAL AND PROPRIETARY TO ADVANCED MICRO DEVICES INC.

© 2021 Advanced Micro Devices

This AMD Board schematic and design is the exclusive property of AMD, and is provided only to entities under a non-disclosure agreement with AMD for evaluation purposes. Further distribution or disclosure is strictly prohibited. Use of this schematic and design for any purpose other than evaluation requires a Board Technology License Agreement with AMD. AMD makes no representations or warranties of any kind regarding this schematic and design, including, not limited to, any implied warranty of merchantability or fitness for a particular purpose, and disclaims responsibility for any consequences resulting from use of the information included herein.

TITLE: **VCK190/VMK180**

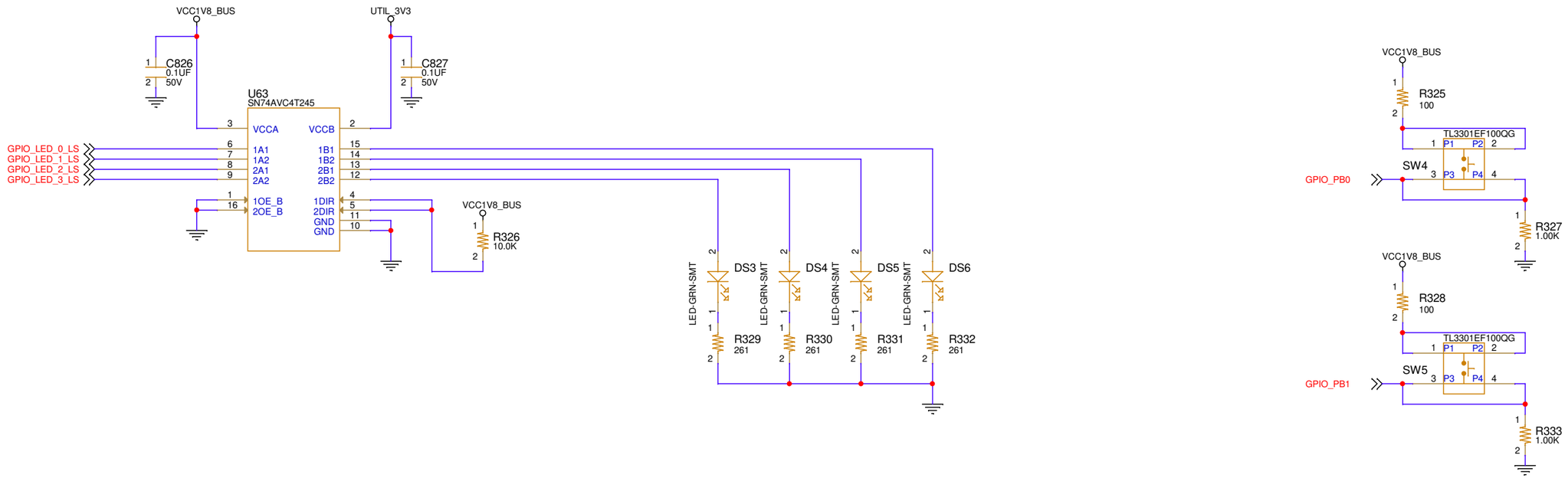

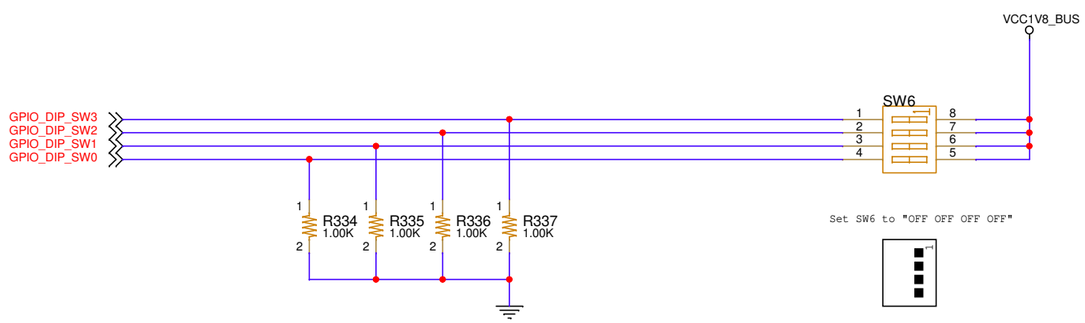

AECG
2100 LOGIC DRIVE
SAN JOSE CA

PAGE:	053 GPIO LEDs Switches Buttons
PAGE NUMBER:	53 OF 108
DOC NO:	038-05005-01
DATE: Thursday, June 22, 2023	REV: 13
SKU: VCK190	

CONFIDENTIAL AND PROPRIETARY TO ADVANCED MICRO DEVICES INC.
© 2021 Advanced Micro Devices
This AMD Board schematic and design is the exclusive property of AMD, and is provided only to entities under a non-disclosure agreement with AMD for evaluation purposes. Further distribution or disclosure is strictly prohibited. Use of this schematic and design for any purpose other than evaluation requires a Board Technology License Agreement with AMD. AMD makes no representations or warranties of any kind regarding this schematic and design, including, not limited to, any implied warranty of merchantability or fitness for a particular purpose, and disclaims responsibility for any consequences resulting from use of the information included herein.

TITLE: VCK190/VMK180

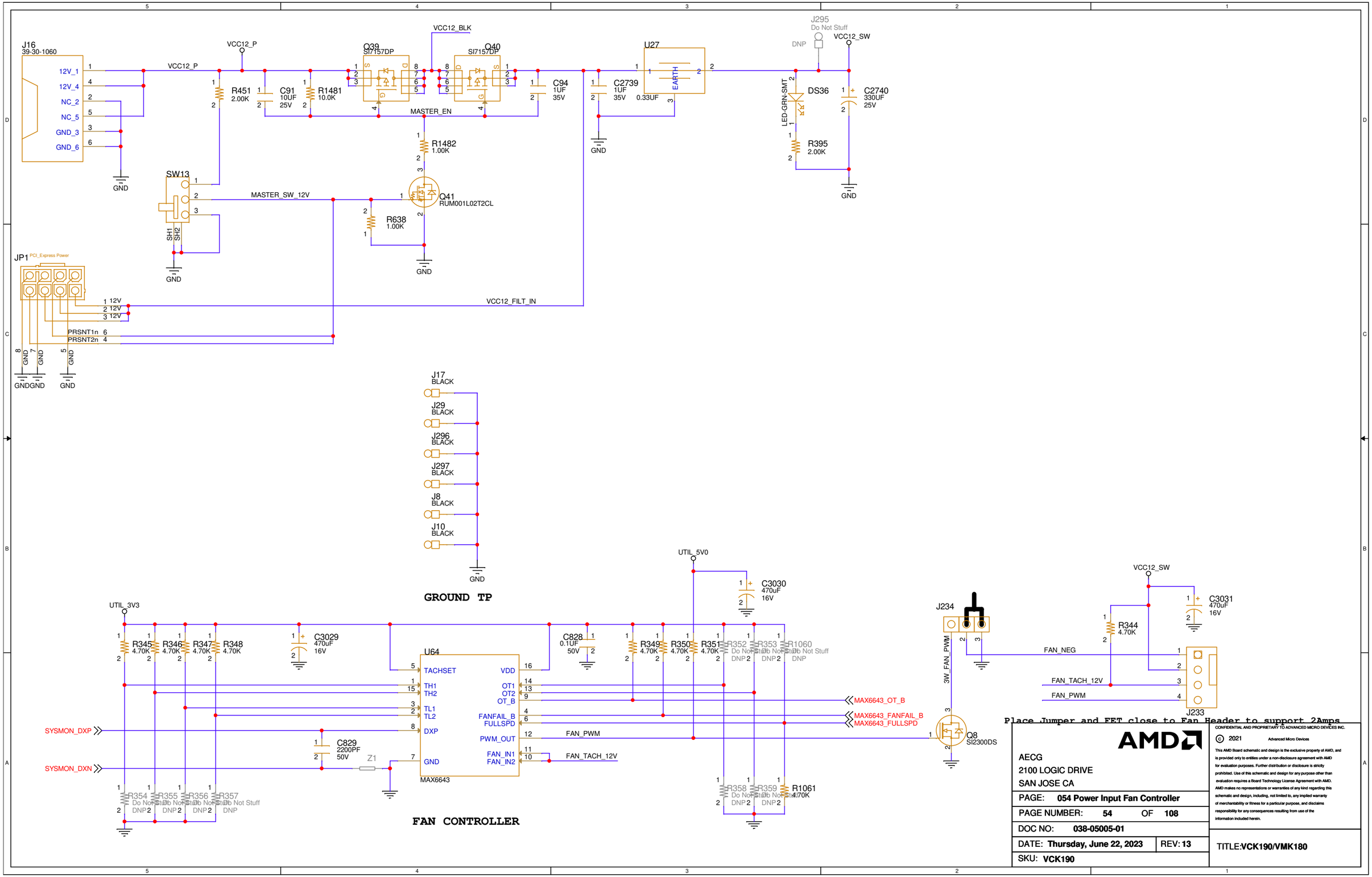

AECG
2100 LOGIC DRIVE
SAN JOSE CA

PAGE:	054 Power Input Fan Controller
PAGE NUMBER:	54 OF 108
DOC NO:	038-05005-01
DATE: Thursday, June 22, 2023	REV: 13
SKU: VCK190	

CONFIDENTIAL AND PROPRIETARY TO ADVANCED MICRO DEVICES INC.
© 2021 Advanced Micro Devices
This AMD Board schematic and design is the exclusive property of AMD, and is provided only to entities under a non-disclosure agreement with AMD for evaluation purposes. Further distribution or disclosure is strictly prohibited. Use of this schematic and design for any purpose other than evaluation requires a Board Technology License Agreement with AMD. AMD makes no representations or warranties of any kind regarding this schematic and design, including, not limited to, any implied warranty of merchantability or fitness for a particular purpose, and disclaims responsibility for any consequences resulting from use of the information included herein.

TITLE: VCK190/VMK180

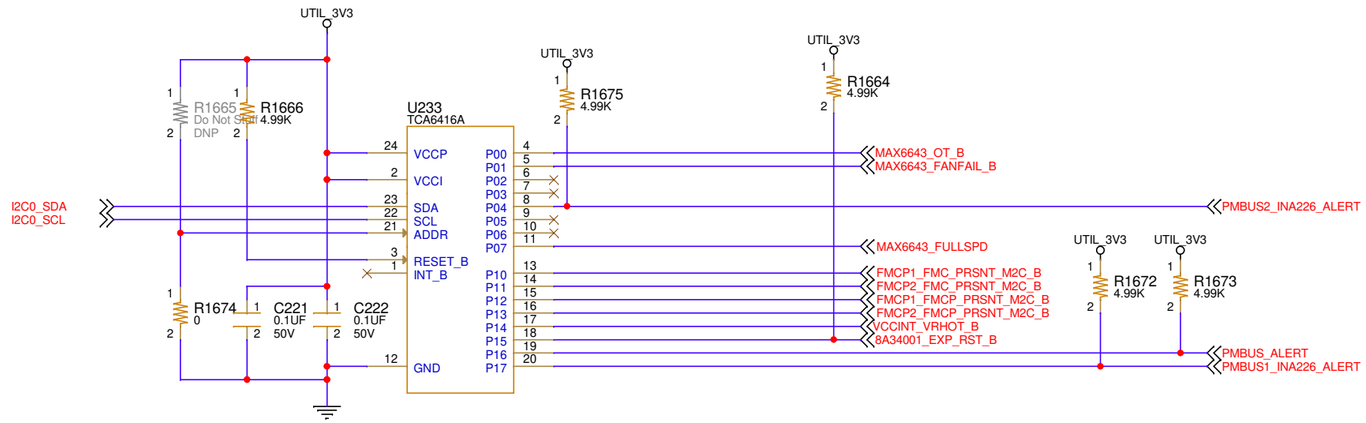

AECG
2100 LOGIC DRIVE
SAN JOSE CA

PAGE: **055 I2C IO Expander**

PAGE NUMBER: **55** OF **108**

DOC NO: **038-05005-01**

DATE: **Thursday, June 22, 2023** REV: **13**

SKU: **VCK190**

CONFIDENTIAL AND PROPRIETARY TO ADVANCED MICRO DEVICES INC.

© 2021 Advanced Micro Devices

This AMD Board schematic and design is the exclusive property of AMD, and is provided only to entities under a non-disclosure agreement with AMD for evaluation purposes. Further distribution or disclosure is strictly prohibited. Use of this schematic and design for any purpose other than evaluation requires a Board Technology License Agreement with AMD. AMD makes no representations or warranties of any kind regarding this schematic and design, including, not limited to, any implied warranty of merchantability or fitness for a particular purpose, and disclaims responsibility for any consequences resulting from use of the information included herein.

TITLE: **VCK190/VMK180**

AECG
2100 LOGIC DRIVE
SAN JOSE CA

PAGE: **056 Power Enable Structure**

PAGE NUMBER: **56** OF **108**

DOC NO: **038-05005-01**

DATE: **Thursday, June 22, 2023** REV: **13**

SKU: **VCK190**

CONFIDENTIAL AND PROPRIETARY TO ADVANCED MICRO DEVICES INC.

© 2021 Advanced Micro Devices

This AMD Board schematic and design is the exclusive property of AMD, and is provided only to entities under a non-disclosure agreement with AMD for evaluation purposes. Further distribution or disclosure is strictly prohibited. Use of this schematic and design for any purpose other than evaluation requires a Board Technology License Agreement with AMD. AMD makes no representations or warranties of any kind regarding this schematic and design, including, not limited to, any implied warranty of merchantability or fitness for a particular purpose, and disclaims responsibility for any consequences resulting from use of the information included herein.

TITLE:**VCK190/VMK180**

VCCINT / VCC_SOC REGULATOR

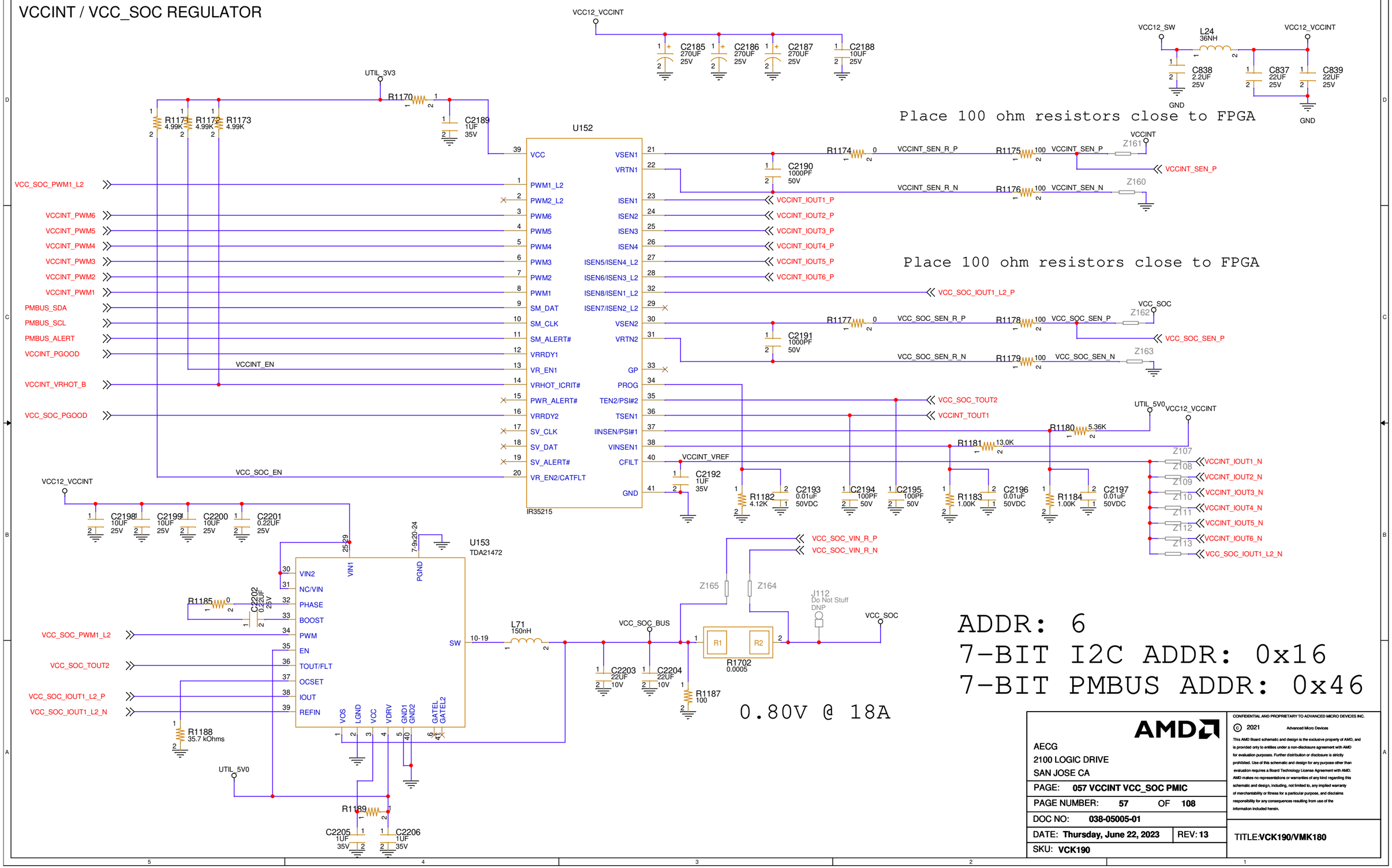

ADDR: 6
7-BIT I2C ADDR: 0x16
7-BIT PMBUS ADDR: 0x46

AMD

AECG
2100 LOGIC DRIVE
SAN JOSE CA

PAGE:	057 VCCINT VCC_SOC PMIC
PAGE NUMBER:	57 OF 108
DOC NO:	038-05005-01
DATE: Thursday, June 22, 2023	REV: 13
SKU: VCK190	

CONFIDENTIAL AND PROPRIETARY TO ADVANCED MICRO DEVICES INC.
© 2021 Advanced Micro Devices
This AMD Board schematic and design is the exclusive property of AMD, and is provided only to entities under a non-disclosure agreement with AMD for evaluation purposes. Further distribution or disclosure is strictly prohibited. Use of this schematic and design for any purpose other than evaluation requires a Board Technology License Agreement with AMD. AMD makes no representations or warranties of any kind regarding this schematic and design, including, not limited to, any implied warranty of merchantability or fitness for a particular purpose, and disclaims responsibility for any consequences resulting from use of the information included herein.

TITLE: VCK190/VMK180

VCCINT PHASES 1,2,3

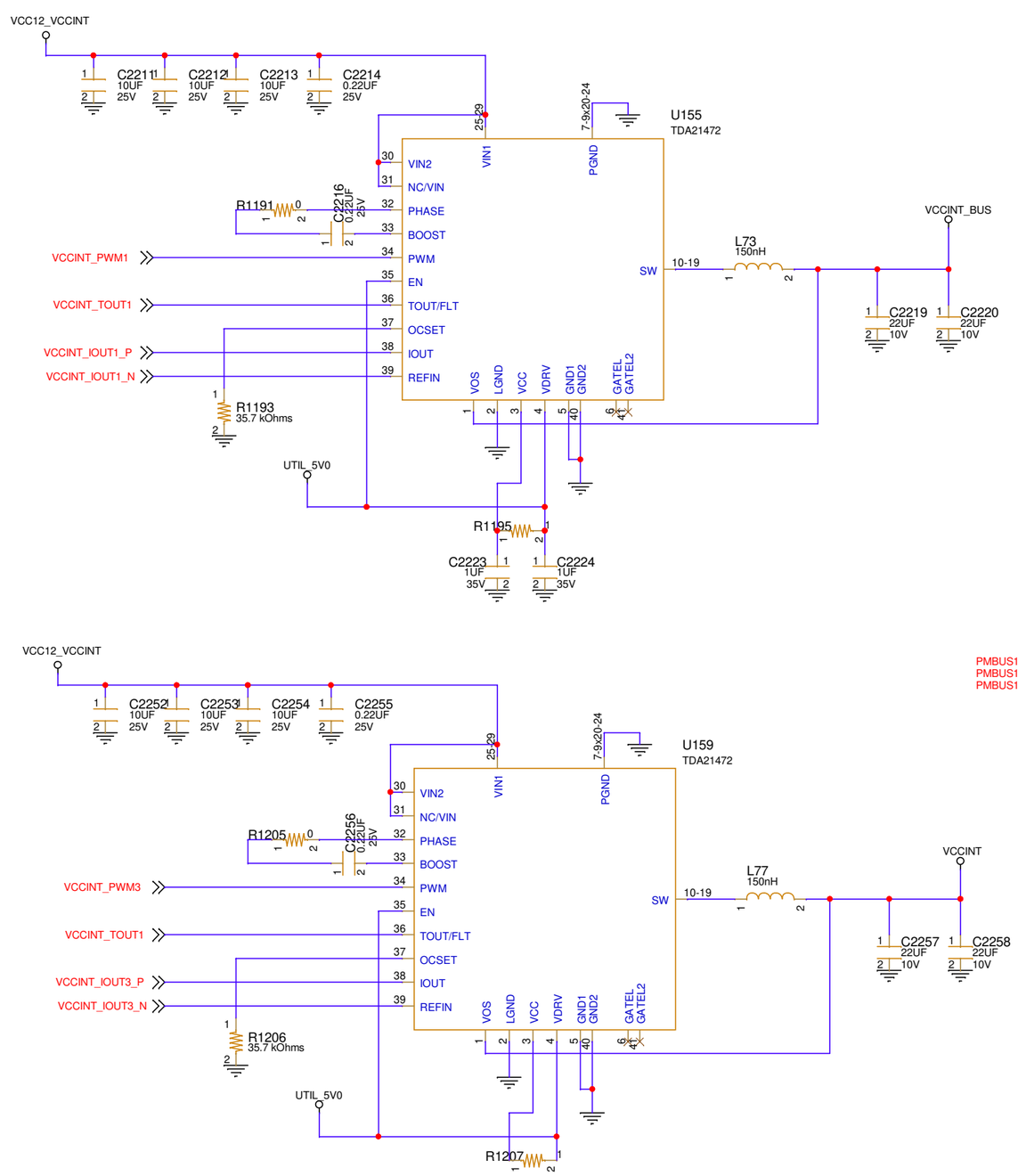

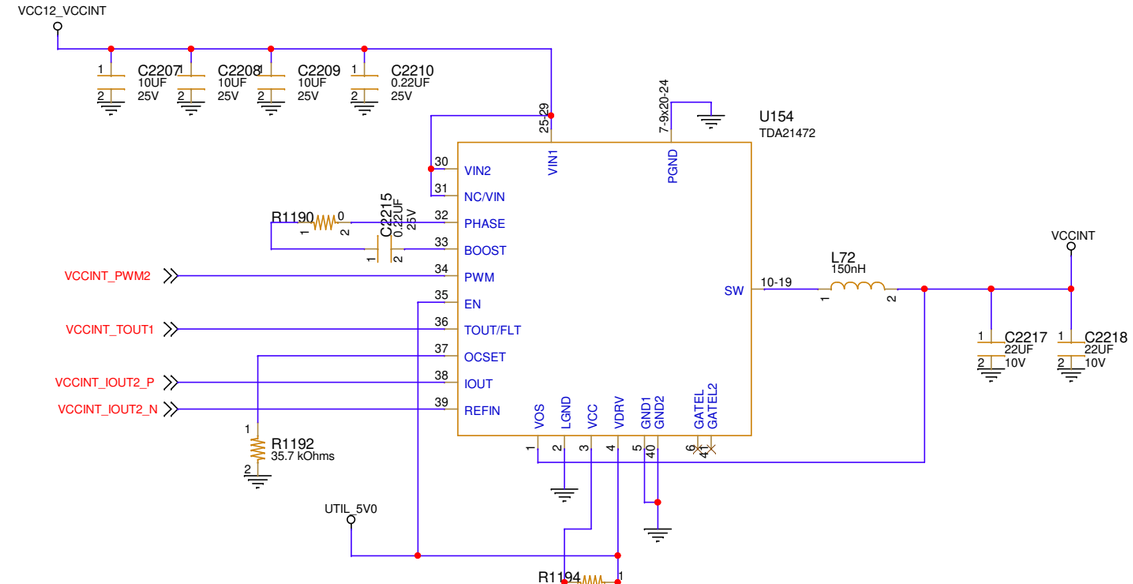

I2C ADDR
0x40

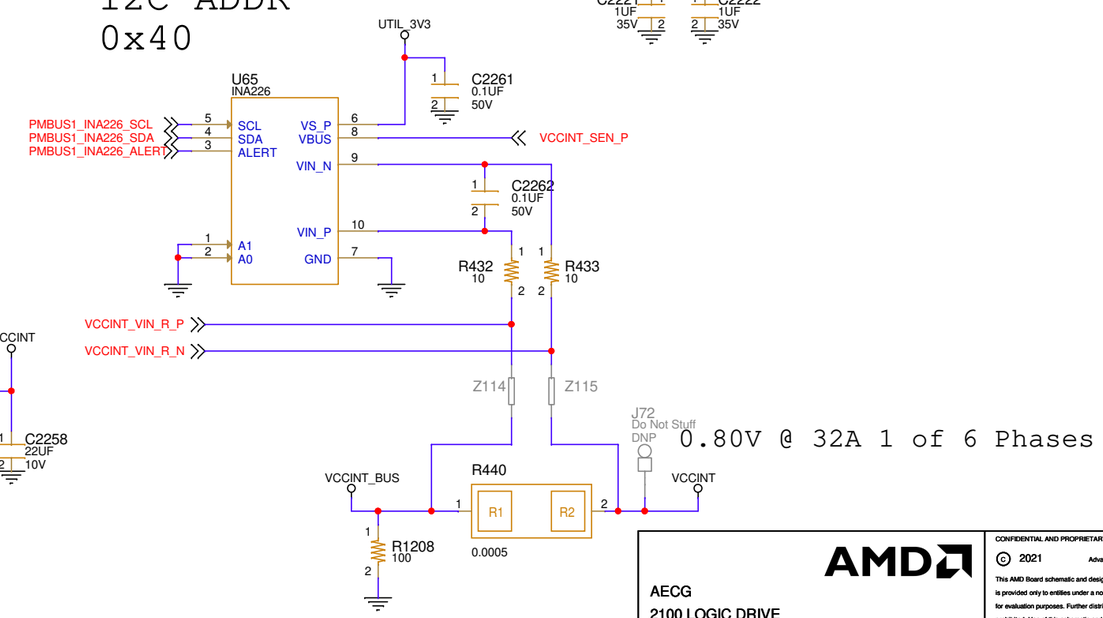

0.80V @ 32A 1 of 6 Phases

AMD

AECG
2100 LOGIC DRIVE
SAN JOSE CA

PAGE:	058 VCCINT PHASES 1 - 3
PAGE NUMBER:	58 OF 108
DOC NO:	038-05005-01
DATE: Thursday, June 22, 2023	REV: 13
SKU: VCK190	

CONFIDENTIAL AND PROPRIETARY TO ADVANCED MICRO DEVICES INC.
© 2021 Advanced Micro Devices
This AMD Board schematic and design is the exclusive property of AMD, and is provided only to entities under a non-disclosure agreement with AMD for evaluation purposes. Further distribution or disclosure is strictly prohibited. Use of this schematic and design for any purpose other than evaluation requires a Board Technology License Agreement with AMD. AMD makes no representations or warranties of any kind regarding this schematic and design, including, not limited to, any implied warranty of merchantability or fitness for a particular purpose, and disclaims responsibility for any consequences resulting from use of the information included herein.

TITLE: VCK190/VMK180

VCCINT PHASES 4,5,6

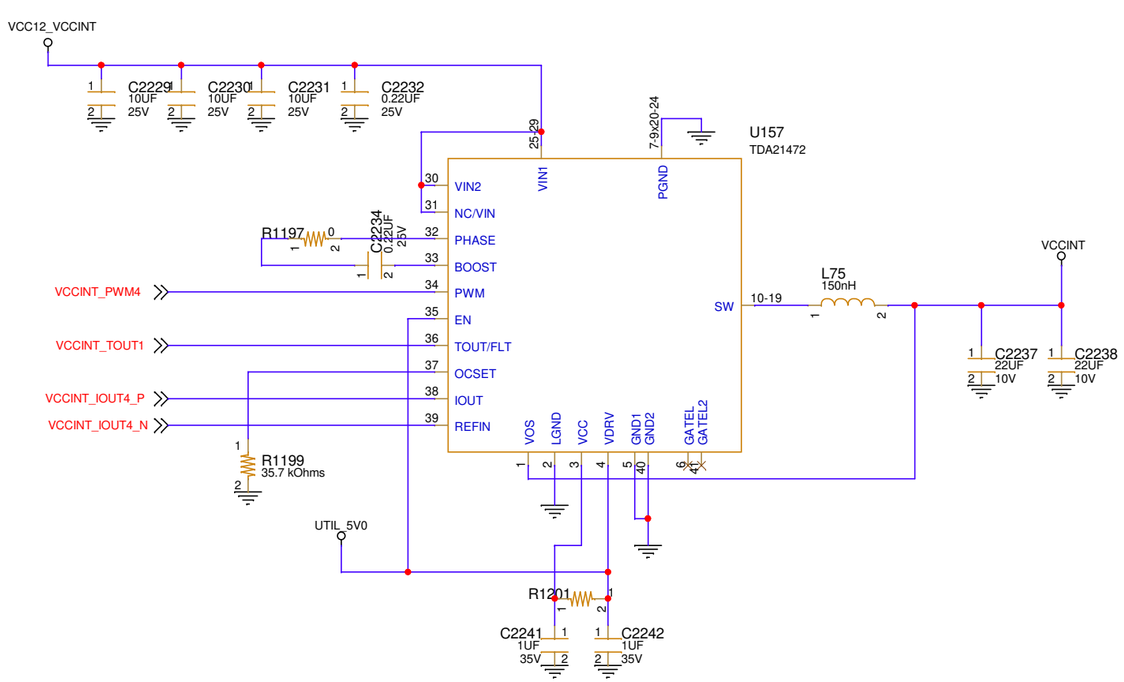

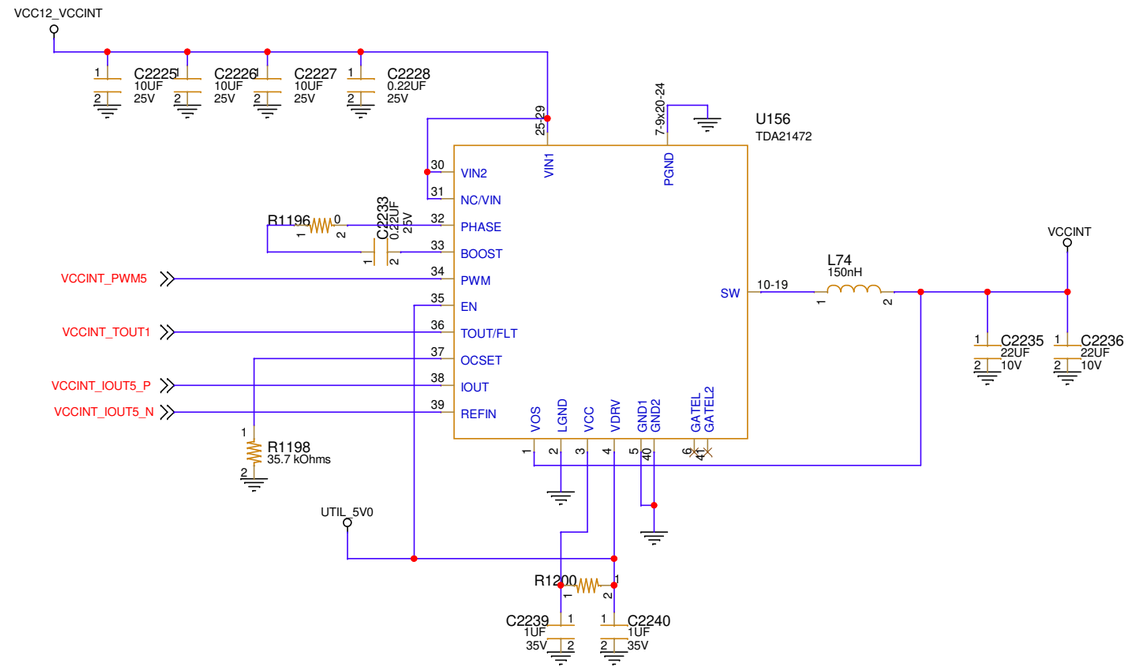

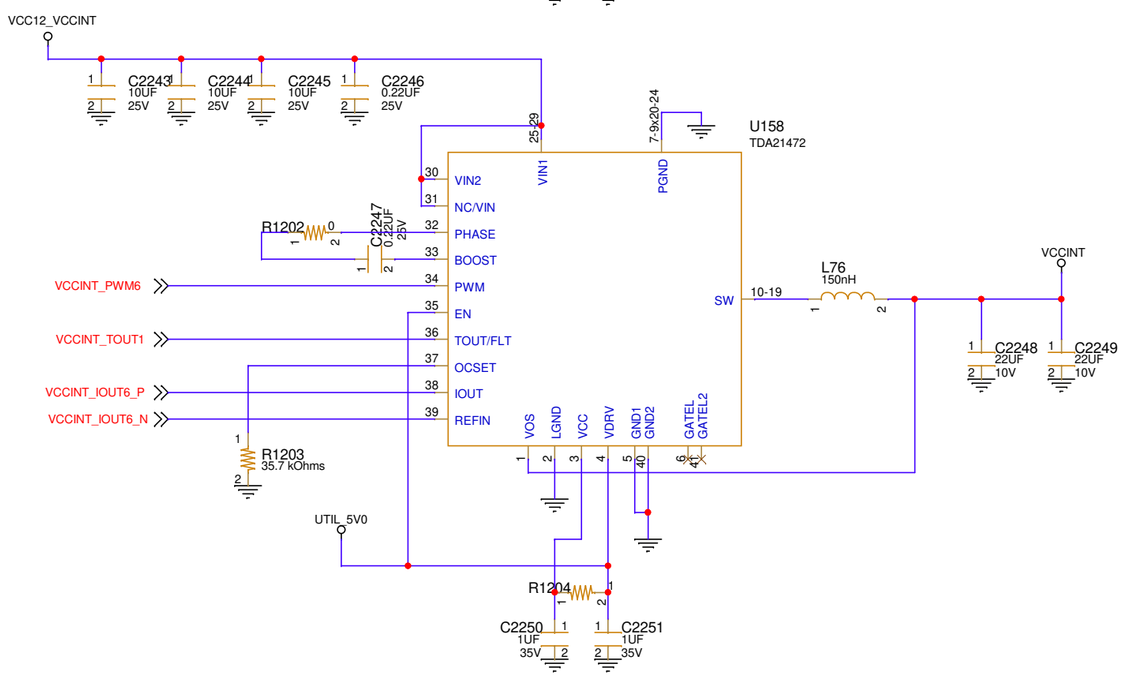

AMD

AECG
2100 LOGIC DRIVE
SAN JOSE CA

PAGE:	059 VCCINT PHASES 3 - 6
PAGE NUMBER:	59 OF 108
DOC NO:	038-05005-01
DATE: Thursday, June 22, 2023	REV: 13
SKU: VCK190	

CONFIDENTIAL AND PROPRIETARY TO ADVANCED MICRO DEVICES INC.

© 2021 Advanced Micro Devices

This AMD Board schematic and design is the exclusive property of AMD, and is provided only to entities under a non-disclosure agreement with AMD for evaluation purposes. Further distribution or disclosure is strictly prohibited. Use of this schematic and design for any purpose other than evaluation requires a Board Technology License Agreement with AMD. AMD makes no representations or warranties of any kind regarding this schematic and design, including, not limited to, any implied warranty of merchantability or fitness for a particular purpose, and disclaims responsibility for any consequences resulting from use of the information included herein.

TITLE: VCK190/VMK180

VCCINT / VCC_SOC Decap

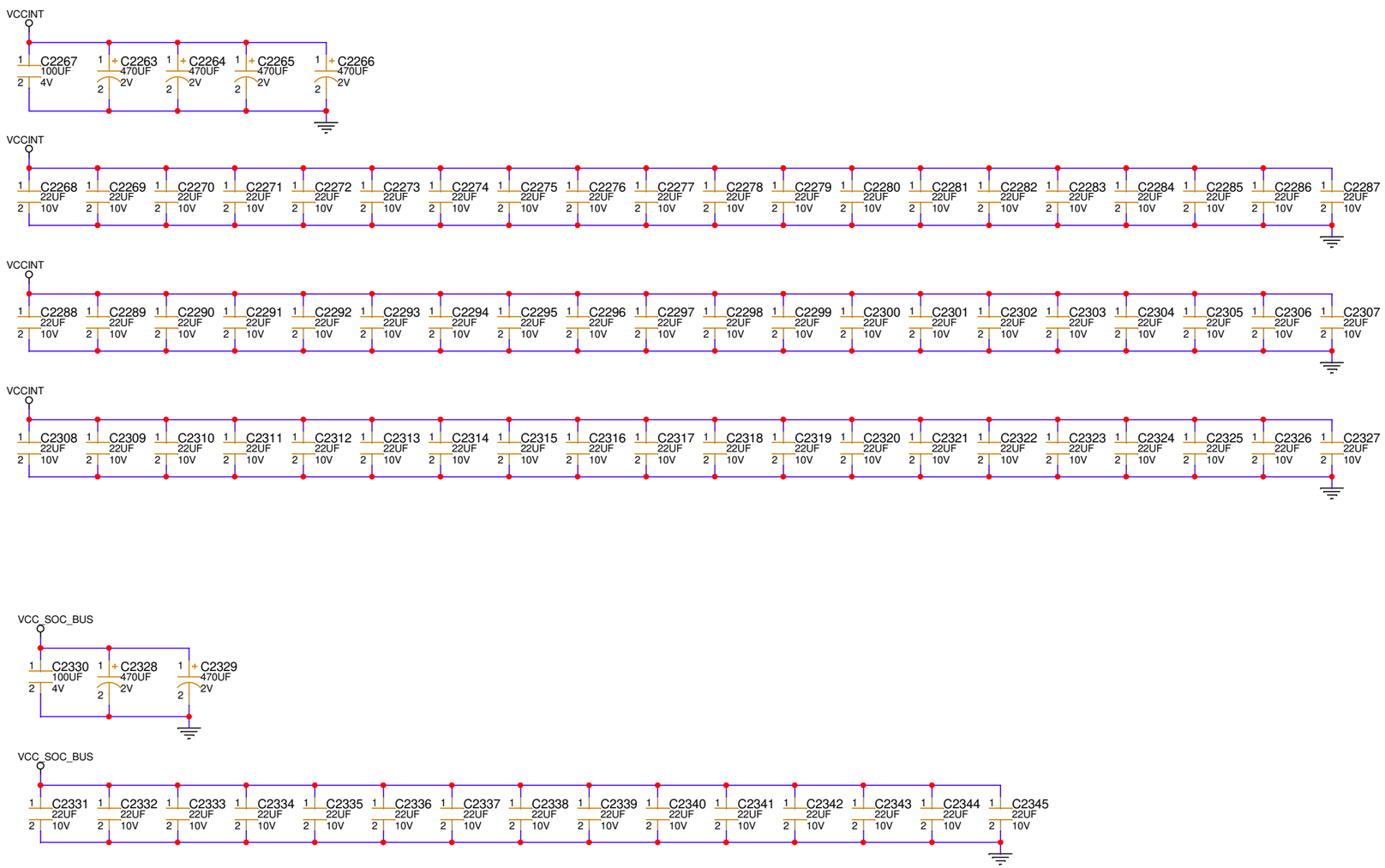

AECG
2100 LOGIC DRIVE
SAN JOSE CA

PAGE:	060 VCCINT / VCC_SOC Decap
PAGE NUMBER:	60 OF 108
DOC NO:	038-05005-01
DATE: Thursday, June 22, 2023	REV: 13
SKU:	VCK190

CONFIDENTIAL AND PROPRIETARY TO ADVANCED MICRO DEVICES INC.
© 2021 Advanced Micro Devices
This AMD Board schematic and design is the exclusive property of AMD, and is provided only to entities under a non-disclosure agreement with AMD for evaluation purposes. Further distribution or disclosure is strictly prohibited. Use of this schematic and design for any purpose other than evaluation requires a Board Technology License Agreement with AMD. AMD makes no representations or warranties of any kind regarding this schematic and design, including, not limited to, any implied warranty of merchantability or fitness for a particular purpose, and disclaims responsibility for any consequences resulting from use of the information included herein.

TITLE: VCK190/VMK180

VCCINT_PMC/PSLP/PSFP/RAM_IO/VCCAUX REGULATOR

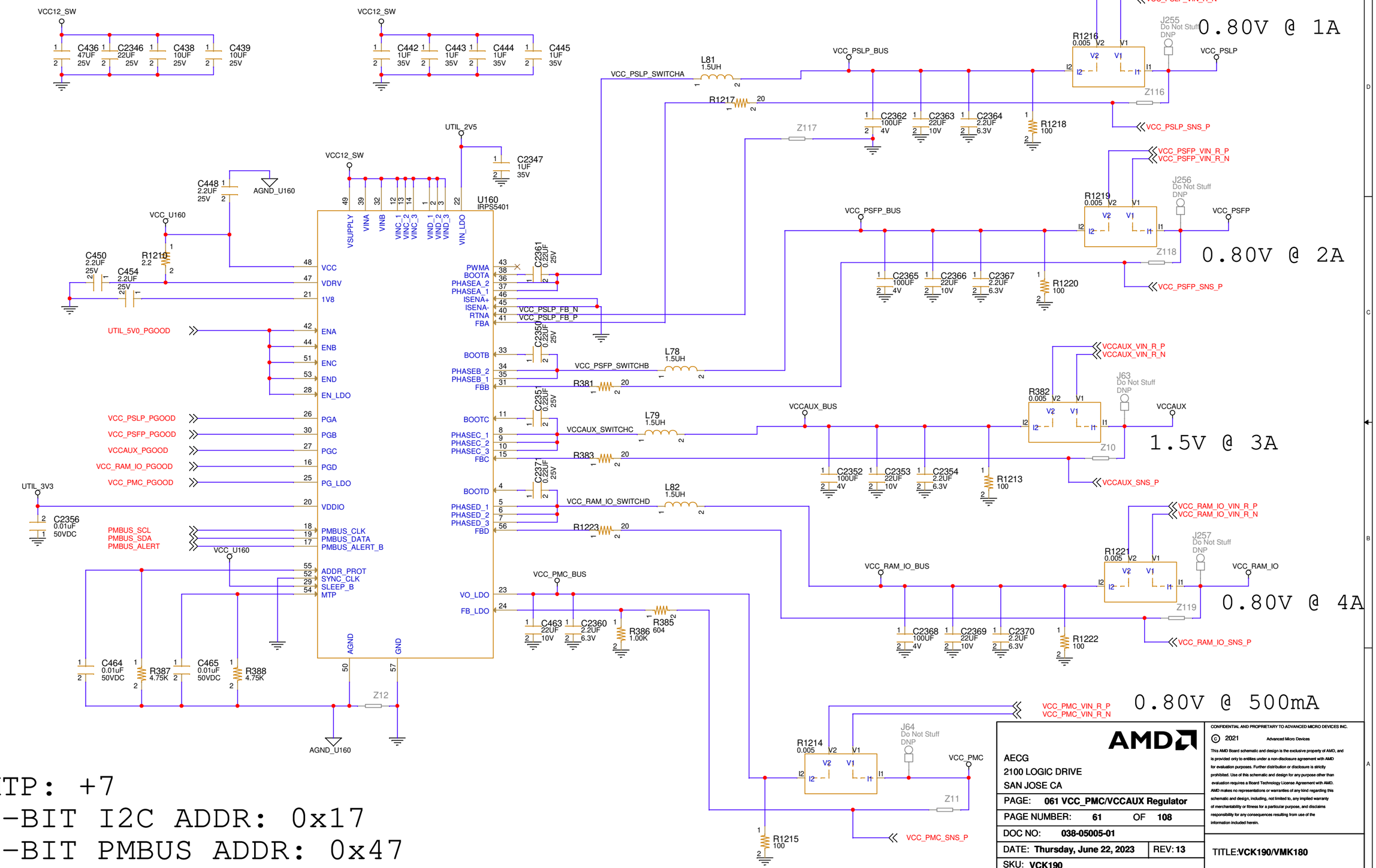

MTP: +7
7-BIT I2C ADDR: 0x17
7-BIT PMBUS ADDR: 0x47

AMD

AECG
2100 LOGIC DRIVE
SAN JOSE CA

PAGE: 061 VCC_PMC/VCCAUX Regulator
PAGE NUMBER: 61 OF 108
DOC NO: 038-05005-01
DATE: Thursday, June 22, 2023 REV: 13
SKU: VCK190

CONFIDENTIAL AND PROPRIETARY TO ADVANCED MICRO DEVICES INC.
© 2021 Advanced Micro Devices
This AMD Board schematic and design is the exclusive property of AMD, and is provided only to entities under a non-disclosure agreement with AMD for evaluation purposes. Further distribution or disclosure is strictly prohibited. Use of this schematic and design for any purpose other than evaluation requires a Board Technology License Agreement with AMD. AMD makes no representations or warranties of any kind regarding this schematic and design, including, not limited to, any implied warranty of merchantability or fitness for a particular purpose, and disclaims responsibility for any consequences resulting from use of the information included herein.

TITLE: VCK190/VMK180

VCCINT_PMC/PSLP/PSFP/RAM_IO/VCCAUX CURRENT SENSE

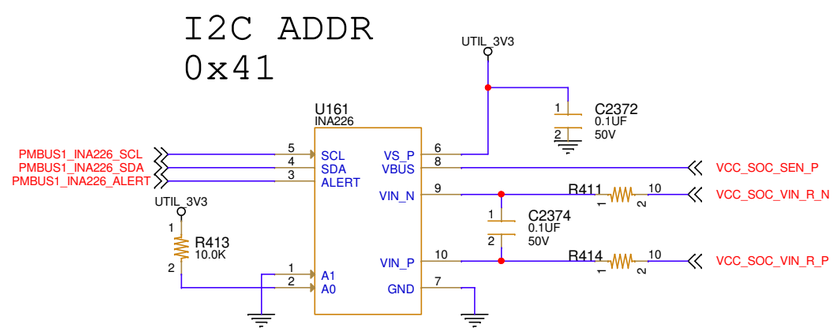

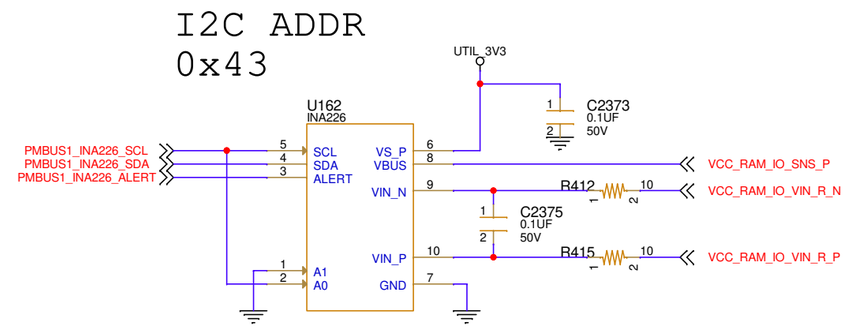

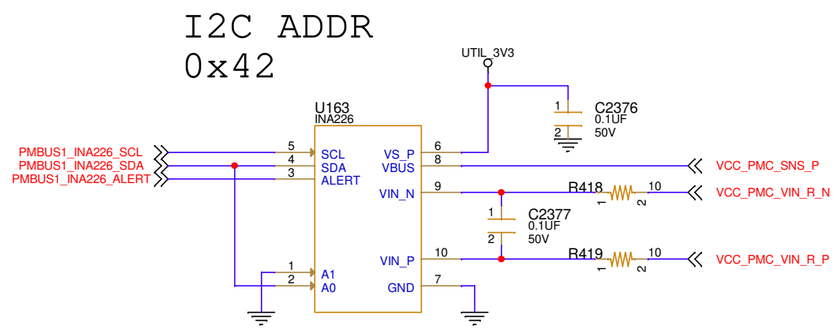

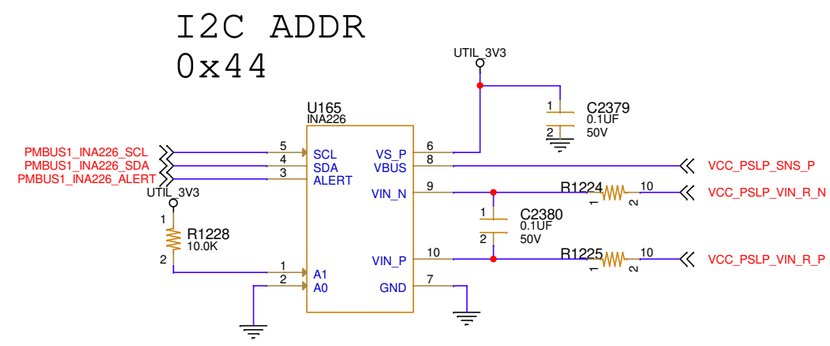

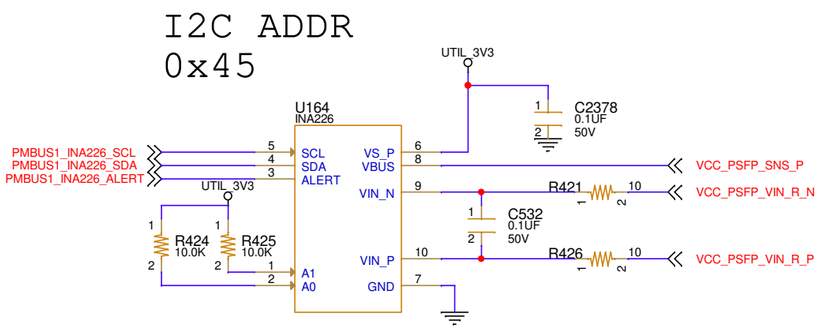

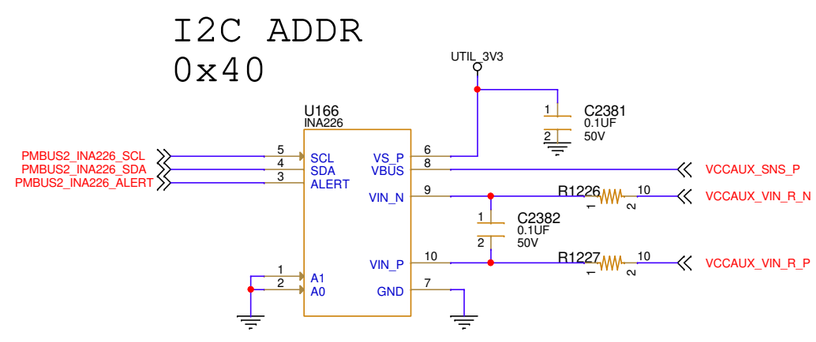

AMD

AECG
2100 LOGIC DRIVE
SAN JOSE CA

PAGE:	062 CURRENT SENSE
PAGE NUMBER:	62 OF 108
DOC NO:	038-05005-01
DATE: Thursday, June 22, 2023	REV: 13
SKU: VCK190	

CONFIDENTIAL AND PROPRIETARY TO ADVANCED MICRO DEVICES INC.

© 2021 Advanced Micro Devices

This AMD Board schematic and design is the exclusive property of AMD, and is provided only to entities under a non-disclosure agreement with AMD for evaluation purposes. Further distribution or disclosure is strictly prohibited. Use of this schematic and design for any purpose other than evaluation requires a Board Technology License Agreement with AMD. AMD makes no representations or warranties of any kind regarding this schematic and design, including, not limited to, any implied warranty of merchantability or fitness for a particular purpose, and disclaims responsibility for any consequences resulting from use of the information included herein.

TITLE: VCK190/VMK180

VCCAUX_PMC/3V3/1V8/VCCO_MIO REGULATOR

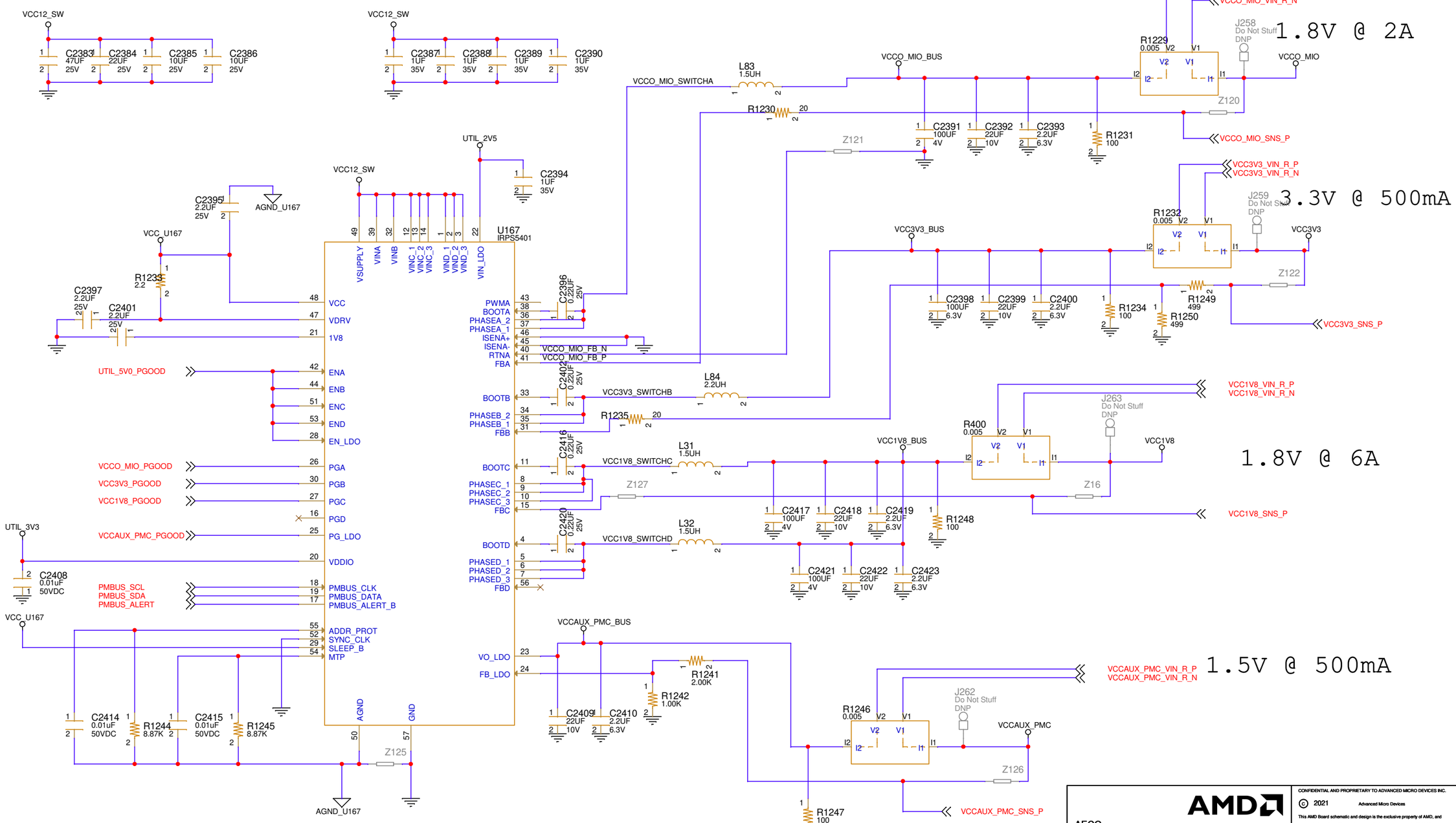

MTP: +C

7-BIT I2C ADDR: 0x1C

7-BIT PMBUS ADDR: 0x4C

AMD

AECG
2100 LOGIC DRIVE
SAN JOSE CA

PAGE:	063 VCCAUXPMC/3V3/1V8/VCCOMIO
PAGE NUMBER:	63 OF 108
DOC NO:	038-05005-01
DATE: Thursday, June 22, 2023	REV: 13
SKU: VCK190	

CONFIDENTIAL AND PROPRIETARY TO ADVANCED MICRO DEVICES INC.
© 2021 Advanced Micro Devices
This AMD Board schematic and design is the exclusive property of AMD, and is provided only to entities under a non-disclosure agreement with AMD for evaluation purposes. Further distribution or disclosure is strictly prohibited. Use of this schematic and design for any purpose other than evaluation requires a Board Technology License Agreement with AMD. AMD makes no representations or warranties of any kind regarding this schematic and design, including, not limited to, any implied warranty of merchantability or fitness for a particular purpose, and disclaims responsibility for any consequences resulting from use of the information included herein.

TITLE: VCK190/VMK180

VCCAUX_PMC/3V3/1V8/VCCO_503 CURRENT SENSE

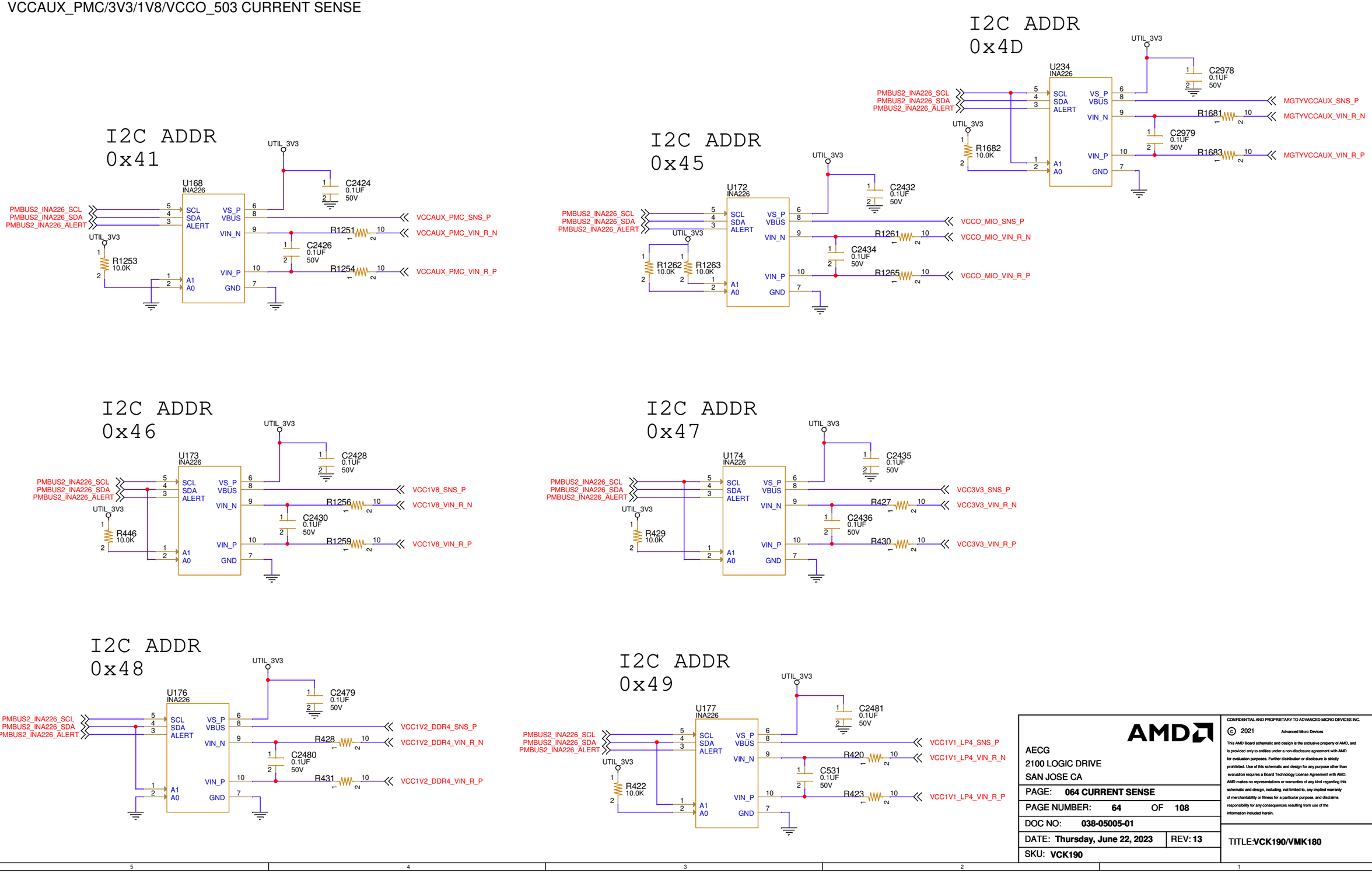

AECG
2100 LOGIC DRIVE
SAN JOSE CA

PAGE:	064 CURRENT SENSE
PAGE NUMBER:	64 OF 108
DOC NO:	038-05005-01
DATE: Thursday, June 22, 2023	REV: 13
SKU: VCK190	

CONFIDENTIAL AND PROPRIETARY TO ADVANCED MICRO DEVICES INC.
© 2021 Advanced Micro Devices
This AMD Board schematic and design is the exclusive property of AMD, and is provided only to entities under a non-disclosure agreement with AMD for evaluation purposes. Further distribution or disclosure is strictly prohibited. Use of this schematic and design for any purpose other than evaluation requires a Board Technology License Agreement with AMD. AMD makes no representations or warranties of any kind regarding this schematic and design, including, not limited to, any implied warranty of merchantability or fitness for a particular purpose, and disclaims responsibility for any consequences resulting from use of the information included herein.

TITLE: VCK190/VMK180

UTIL1V13/2V5/VCC1V1/1V2 REGULATOR

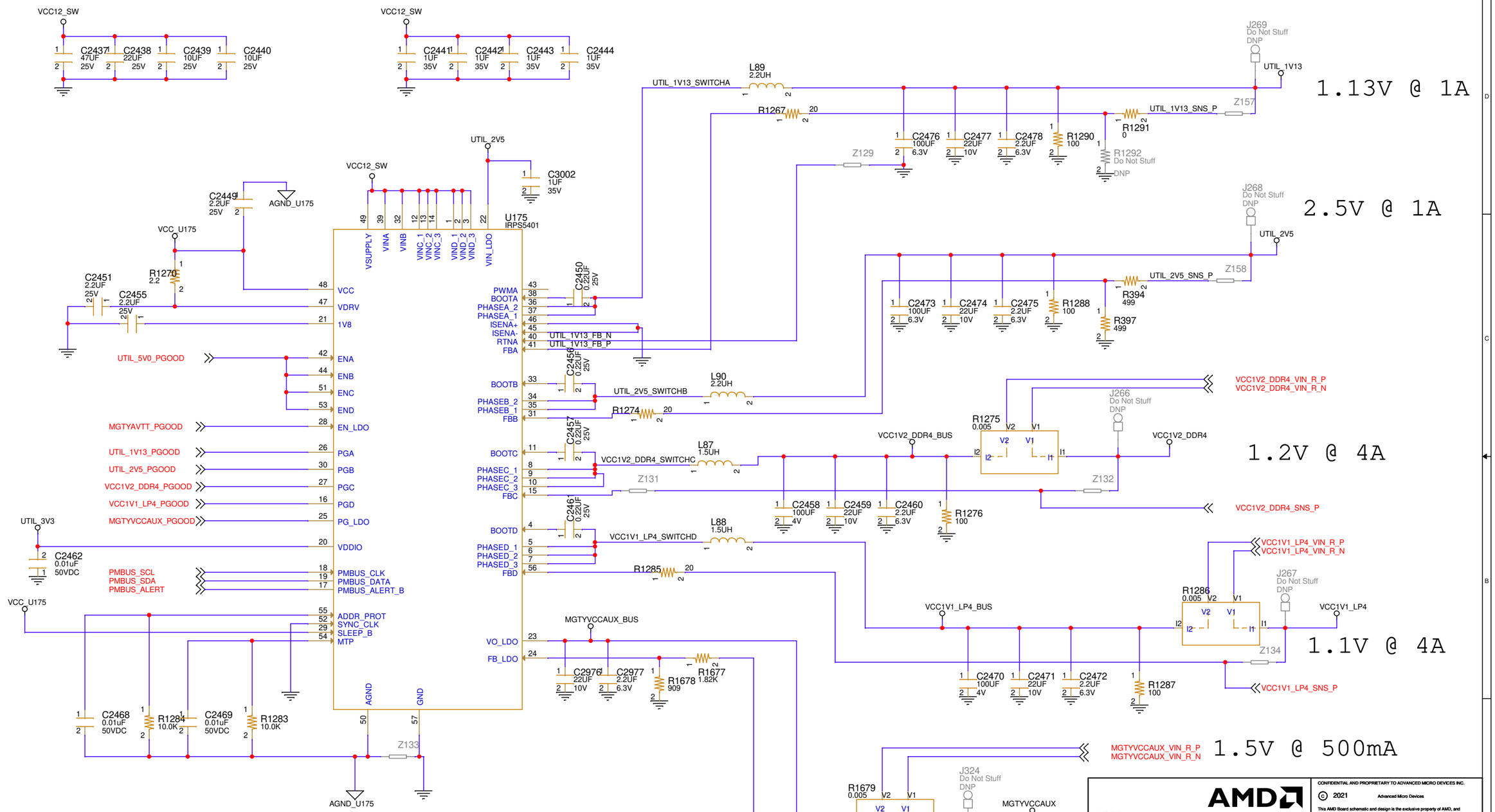

MTP: +D

7-BIT I2C ADDR: 0x1D

7-BIT PMBUS ADDR: 0x4D

AMD

AECG
2100 LOGIC DRIVE
SAN JOSE CA

PAGE:	065 UTIL1V13/2V5/VCC1V1/1V2 Reg
PAGE NUMBER:	65 OF 108
DOC NO:	038-05005-01
DATE: Thursday, June 22, 2023	REV: 13
SKU: VCK190	

CONFIDENTIAL AND PROPRIETARY TO ADVANCED MICRO DEVICES INC.
© 2021 Advanced Micro Devices
This AMD Board schematic and design is the exclusive property of AMD, and is provided only to entities under a non-disclosure agreement with AMD for evaluation purposes. Further distribution or disclosure is strictly prohibited. Use of this schematic and design for any purpose other than evaluation requires a Board Technology License Agreement with AMD. AMD makes no representations or warranties of any kind regarding this schematic and design, including, not limited to, any implied warranty of merchantability or fitness for a particular purpose, and disclaims responsibility for any consequences resulting from use of the information included herein.

TITLE: VCK190/VMK180

AECG
2100 LOGIC DRIVE
SAN JOSE CA

PAGE: **066 Blank**

PAGE NUMBER: **66** OF **108**

DOC NO: **038-05005-01**

DATE: **Thursday, June 22, 2023** REV: **13**

SKU: **VCK190**

CONFIDENTIAL AND PROPRIETARY TO ADVANCED MICRO DEVICES INC.

© 2021 Advanced Micro Devices

This AMD Board schematic and design is the exclusive property of AMD, and is provided only to entities under a non-disclosure agreement with AMD for evaluation purposes. Further distribution or disclosure is strictly prohibited. Use of this schematic and design for any purpose other than evaluation requires a Board Technology License Agreement with AMD. AMD makes no representations or warranties of any kind regarding this schematic and design, including, not limited to, any implied warranty of merchantability or fitness for a particular purpose, and disclaims responsibility for any consequences resulting from use of the information included herein.

TITLE:**VCK190/VMK180**

AECG
2100 LOGIC DRIVE
SAN JOSE CA

PAGE: **067 Blank**

PAGE NUMBER: **67** OF **108**

DOC NO: **038-05005-01**

DATE: **Thursday, June 22, 2023** REV: **13**

SKU: **VCK190**

CONFIDENTIAL AND PROPRIETARY TO ADVANCED MICRO DEVICES INC.

© 2021 Advanced Micro Devices

This AMD Board schematic and design is the exclusive property of AMD, and is provided only to entities under a non-disclosure agreement with AMD for evaluation purposes. Further distribution or disclosure is strictly prohibited. Use of this schematic and design for any purpose other than evaluation requires a Board Technology License Agreement with AMD. AMD makes no representations or warranties of any kind regarding this schematic and design, including, not limited to, any implied warranty of merchantability or fitness for a particular purpose, and disclaims responsibility for any consequences resulting from use of the information included herein.

TITLE: **VCK190/VMK180**

AECG
2100 LOGIC DRIVE
SAN JOSE CA

PAGE: **068 Blank**

PAGE NUMBER: **68** OF **108**

DOC NO: **038-05005-01**

DATE: **Thursday, June 22, 2023** REV: **13**

SKU: **VCK190**

CONFIDENTIAL AND PROPRIETARY TO ADVANCED MICRO DEVICES INC.

© 2021 Advanced Micro Devices

This AMD Board schematic and design is the exclusive property of AMD, and is provided only to entities under a non-disclosure agreement with AMD for evaluation purposes. Further distribution or disclosure is strictly prohibited. Use of this schematic and design for any purpose other than evaluation requires a Board Technology License Agreement with AMD. AMD makes no representations or warranties of any kind regarding this schematic and design, including, not limited to, any implied warranty of merchantability or fitness for a particular purpose, and disclaims responsibility for any consequences resulting from use of the information included herein.

TITLE: **VCK190/VMK180**

VADJ_FMC REGULATOR

I2C ADDR
0x4A

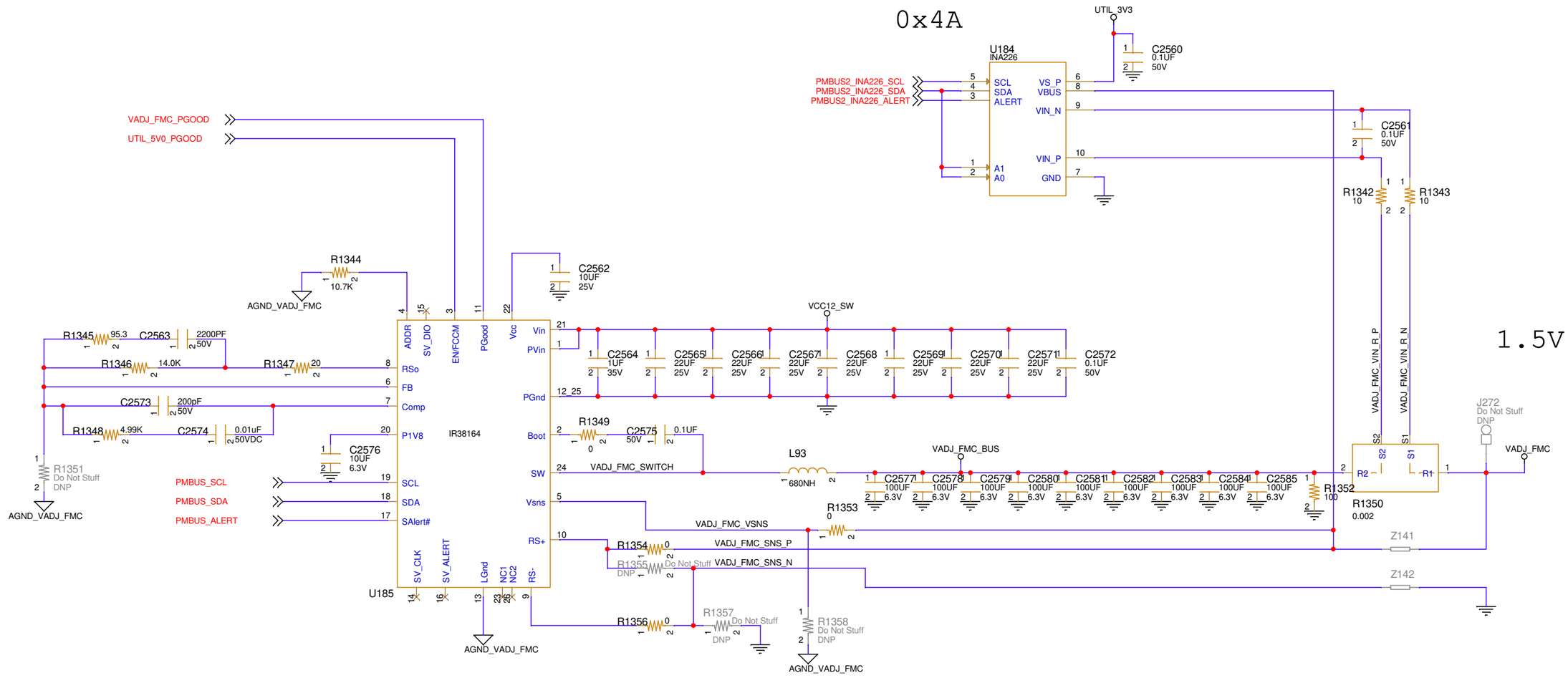

OFFSET: +14
7-BIT I2C ADDR: 0x1E
7-BIT PMBUS ADDR: 0x4E

AECG
2100 LOGIC DRIVE
SAN JOSE CA

PAGE:	069 VADJ_FMC REGULATOR
PAGE NUMBER:	69 OF 108
DOC NO:	038-05005-01
DATE: Thursday, June 22, 2023	REV: 13
SKU: VCK190	

CONFIDENTIAL AND PROPRIETARY TO ADVANCED MICRO DEVICES INC.
© 2021 Advanced Micro Devices
This AMD Board schematic and design is the exclusive property of AMD, and is provided only to entities under a non-disclosure agreement with AMD for evaluation purposes. Further distribution or disclosure is strictly prohibited. Use of this schematic and design for any purpose other than evaluation requires a Board Technology License Agreement with AMD. AMD makes no representations or warranties of any kind regarding this schematic and design, including, not limited to, any implied warranty of merchantability or fitness for a particular purpose, and disclaims responsibility for any consequences resulting from use of the information included herein.

TITLE: VCK190/VMK180

MGTYAVCC REGULATOR

I2C ADDR
0x4B

0.88V @ 6A

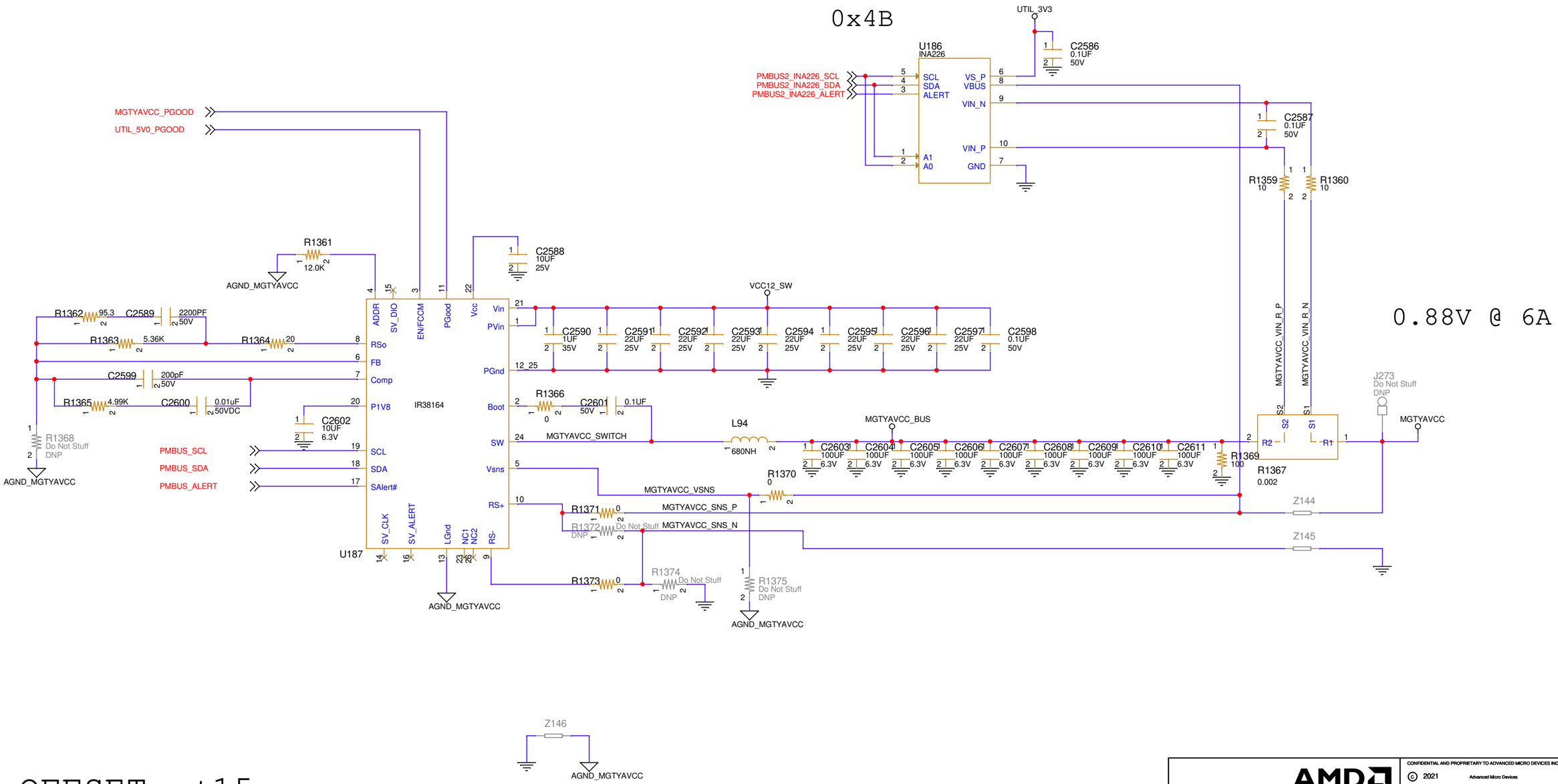

OFFSET: +15
7-BIT I2C ADDR: 0x1F
7-BIT PMBUS ADDR: 0x4F

AMD

AECG
2100 LOGIC DRIVE
SAN JOSE CA

PAGE:	070 MGTYAVCC Regulator
PAGE NUMBER:	70 OF 108
DOC NO:	038-05005-01
DATE: Thursday, June 22, 2023	REV: 13
SKU: VCK190	

CONFIDENTIAL AND PROPRIETARY TO ADVANCED MICRO DEVICES INC.
© 2021 Advanced Micro Devices
This AMD Board schematic and design is the exclusive property of AMD, and is provided only to entities under a non-disclosure agreement with AMD for evaluation purposes. Further distribution or disclosure is strictly prohibited. Use of this schematic and design for any purpose other than evaluation requires a Board Technology License Agreement with AMD. AMD makes no representations or warranties of any kind regarding this schematic and design, including, not limited to, any implied warranty of merchantability or fitness for a particular purpose, and disclaims responsibility for any consequences resulting from use of the information included herein.

TITLE: VCK190/VMK180

MGTYAVTT REGULATOR

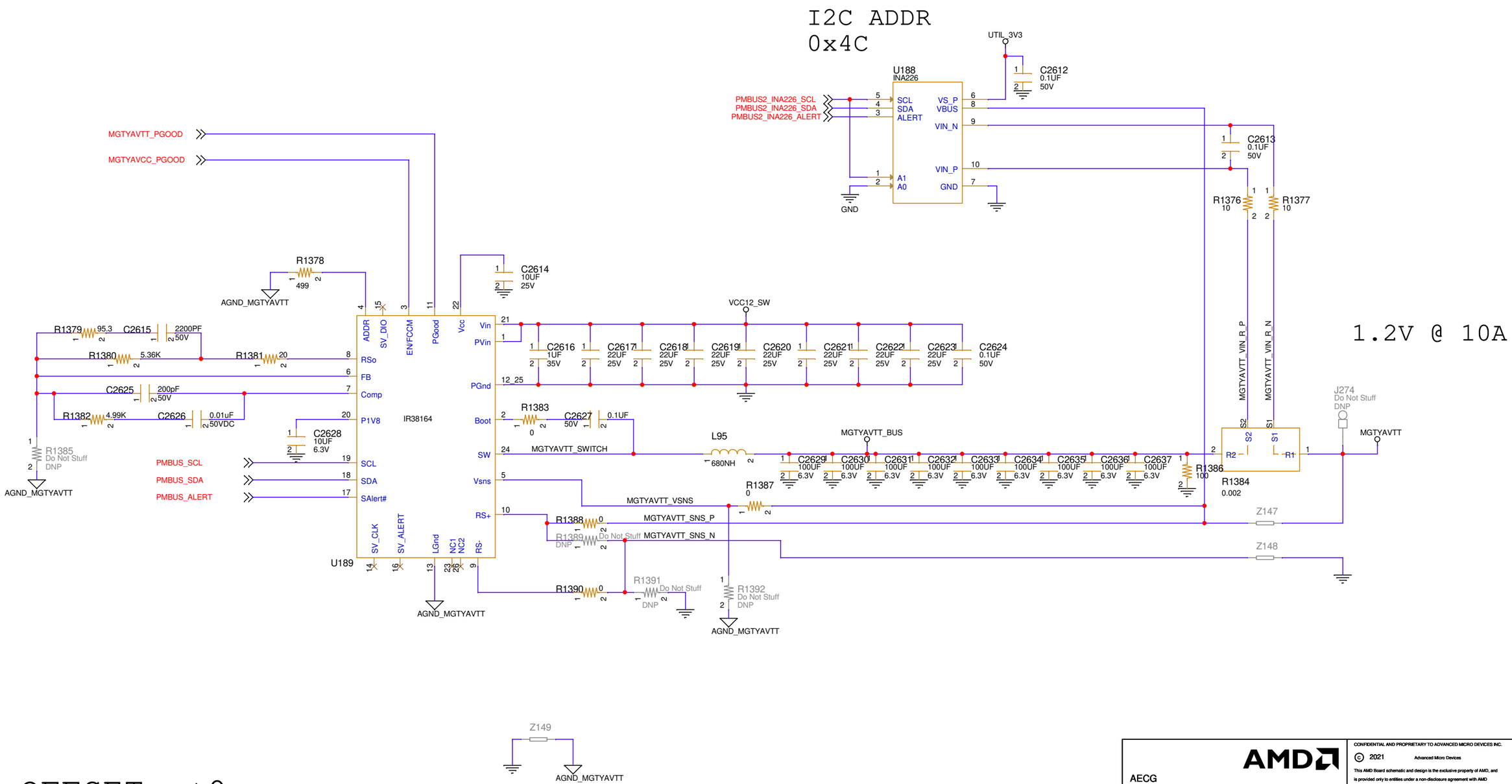

OFFSET: +0
7-BIT I2C ADDR: 0x20
7-BIT PMBUS ADDR: 0x50

AMD

AECG
2100 LOGIC DRIVE
SAN JOSE CA

PAGE:	071 MGTYAVTT Regulator
PAGE NUMBER:	71 OF 108
DOC NO:	038-05005-01
DATE: Thursday, June 22, 2023	REV: 13
SKU: VCK190	

CONFIDENTIAL AND PROPRIETARY TO ADVANCED MICRO DEVICES INC.
© 2021 Advanced Micro Devices
This AMD Board schematic and design is the exclusive property of AMD, and is provided only to entities under a non-disclosure agreement with AMD for evaluation purposes. Further distribution or disclosure is strictly prohibited. Use of this schematic and design for any purpose other than evaluation requires a Board Technology License Agreement with AMD. AMD makes no representations or warranties of any kind regarding this schematic and design, including, not limited to, any implied warranty of merchantability or fitness for a particular purpose, and disclaims responsibility for any consequences resulting from use of the information included herein.

TITLE: VCK190/VMK180

DDR VTT REGULATOR

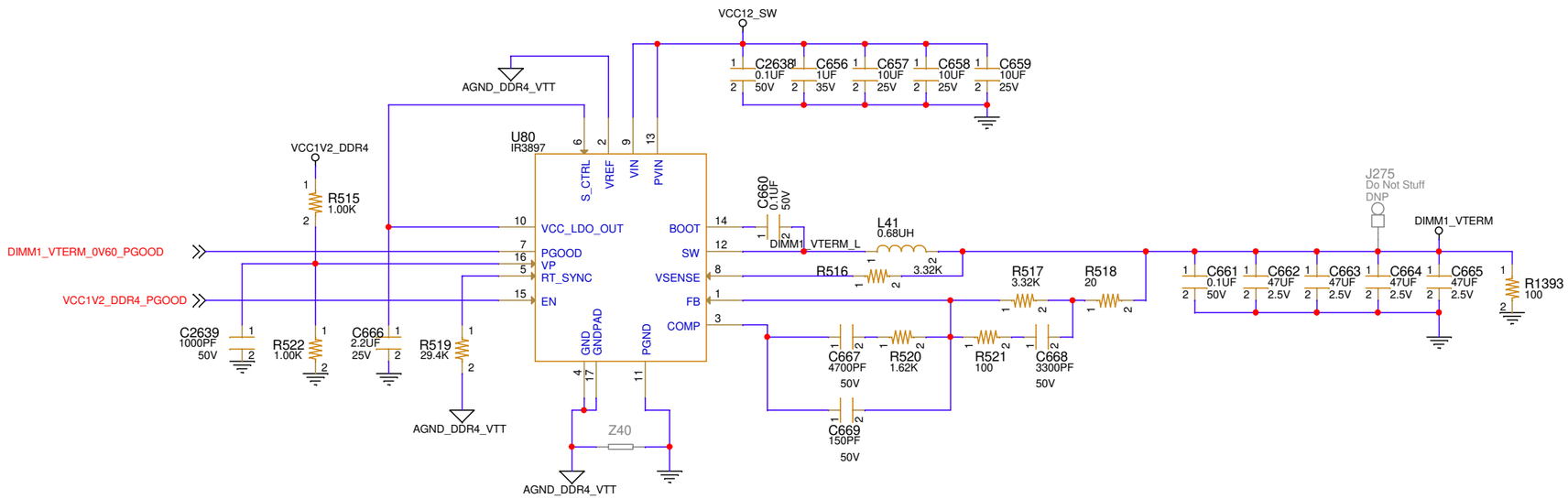

AECG
2100 LOGIC DRIVE
SAN JOSE CA

PAGE: **072 DDR4 VTT Regulator**

PAGE NUMBER: **72** OF **108**

DOC NO: **038-05005-01**

DATE: **Thursday, June 22, 2023** REV: **13**

SKU: **VCK190**

CONFIDENTIAL AND PROPRIETARY TO ADVANCED MICRO DEVICES INC.

© 2021 Advanced Micro Devices

This AMD Board schematic and design is the exclusive property of AMD, and is provided only to entities under a non-disclosure agreement with AMD for evaluation purposes. Further distribution or disclosure is strictly prohibited. Use of this schematic and design for any purpose other than evaluation requires a Board Technology License Agreement with AMD. AMD makes no representations or warranties of any kind regarding this schematic and design, including, not limited to, any implied warranty of merchantability or fitness for a particular purpose, and disclaims responsibility for any consequences resulting from use of the information included herein.

TITLE: **VCK190/VMK180**

UTIL_3V3 REGULATOR

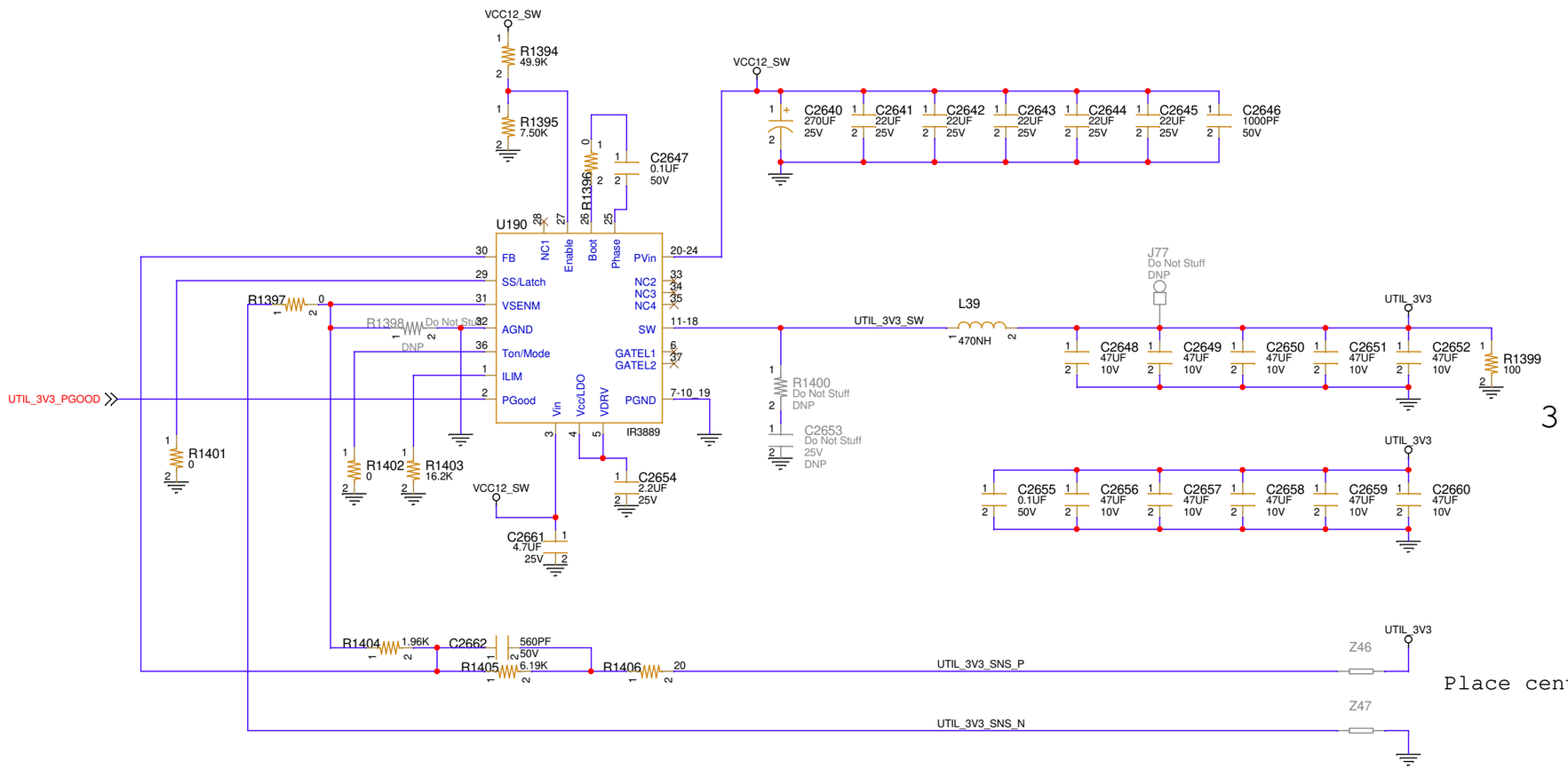

3.3V @ 22A

Place centrally to UTIL_3V3 Load

AECG
2100 LOGIC DRIVE
SAN JOSE CA

PAGE:	073 UTIL_3V3 Regulator
PAGE NUMBER:	73 OF 108
DOC NO:	038-05005-01
DATE: Thursday, June 22, 2023	REV: 13
SKU: VCK190	

CONFIDENTIAL AND PROPRIETARY TO ADVANCED MICRO DEVICES INC.

© 2021 Advanced Micro Devices

This AMD Board schematic and design is the exclusive property of AMD, and is provided only to entities under a non-disclosure agreement with AMD for evaluation purposes. Further distribution or disclosure is strictly prohibited. Use of this schematic and design for any purpose other than evaluation requires a Board Technology License Agreement with AMD. AMD makes no representations or warranties of any kind regarding this schematic and design, including, not limited to, any implied warranty of merchantability or fitness for a particular purpose, and disclaims responsibility for any consequences resulting from use of the information included herein.

TITLE: VCK190/VMK180

UTIL_5V0 REGULATOR

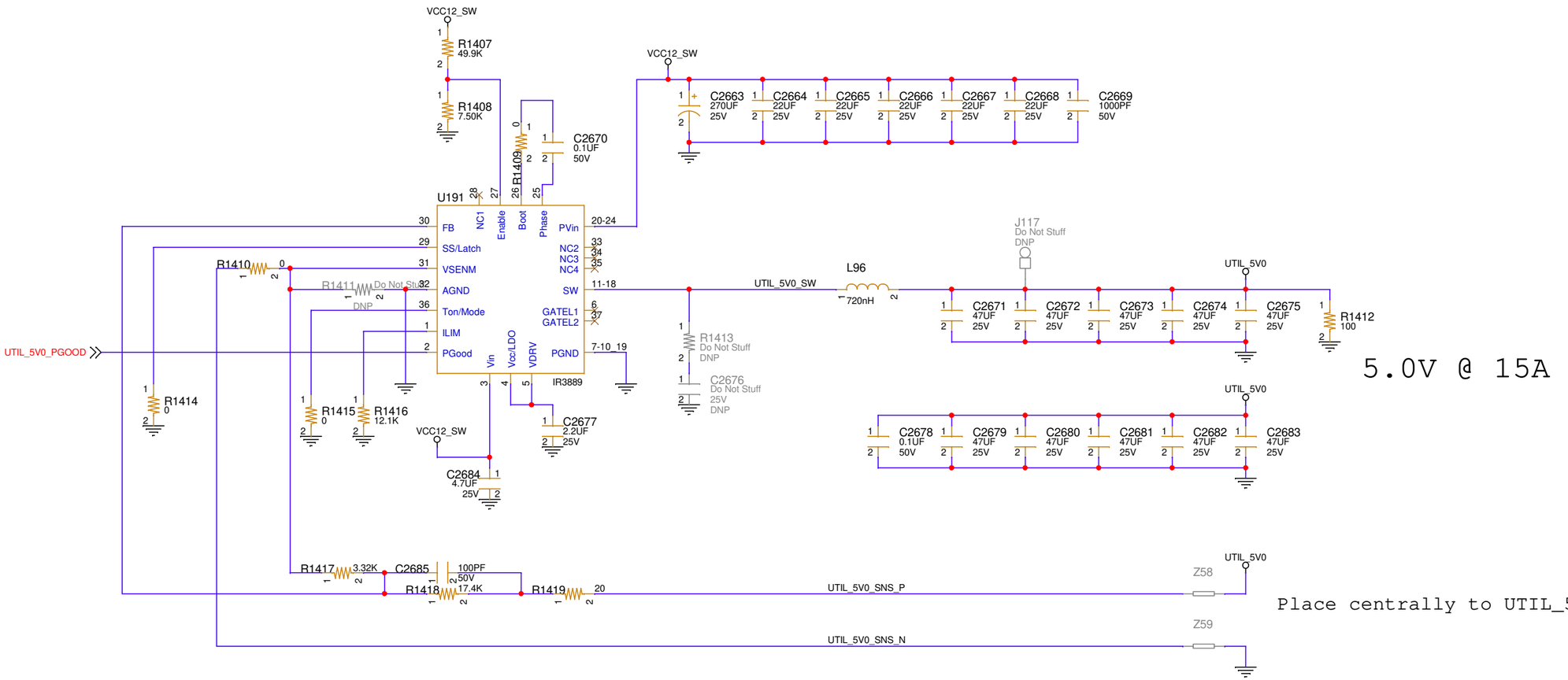

5.0V @ 15A

Place centrally to UTIL_5V0 Load

AECG
2100 LOGIC DRIVE
SAN JOSE CA

PAGE:	074 UTIL_5V0 Regulator
PAGE NUMBER:	74 OF 108
DOC NO:	038-05005-01
DATE: Thursday, June 22, 2023	REV: 13
SKU: VCK190	

CONFIDENTIAL AND PROPRIETARY TO ADVANCED MICRO DEVICES INC.

© 2021 Advanced Micro Devices

This AMD Board schematic and design is the exclusive property of AMD, and is provided only to entities under a non-disclosure agreement with AMD for evaluation purposes. Further distribution or disclosure is strictly prohibited. Use of this schematic and design for any purpose other than evaluation requires a Board Technology License Agreement with AMD. AMD makes no representations or warranties of any kind regarding this schematic and design, including, not limited to, any implied warranty of merchantability or fitness for a particular purpose, and disclaims responsibility for any consequences resulting from use of the information included herein.

TITLE: VCK190/VMK180

AECG
2100 LOGIC DRIVE
SAN JOSE CA

PAGE: **075 Blank**

PAGE NUMBER: **75** OF **108**

DOC NO: **038-05005-01**

DATE: **Thursday, June 22, 2023** REV: **13**

SKU: **VCK190**

CONFIDENTIAL AND PROPRIETARY TO ADVANCED MICRO DEVICES INC.

© 2021 Advanced Micro Devices

This AMD Board schematic and design is the exclusive property of AMD, and is provided only to entities under a non-disclosure agreement with AMD for evaluation purposes. Further distribution or disclosure is strictly prohibited. Use of this schematic and design for any purpose other than evaluation requires a Board Technology License Agreement with AMD. AMD makes no representations or warranties of any kind regarding this schematic and design, including, not limited to, any implied warranty of merchantability or fitness for a particular purpose, and disclaims responsibility for any consequences resulting from use of the information included herein.

TITLE: **VCK190/VMK180**

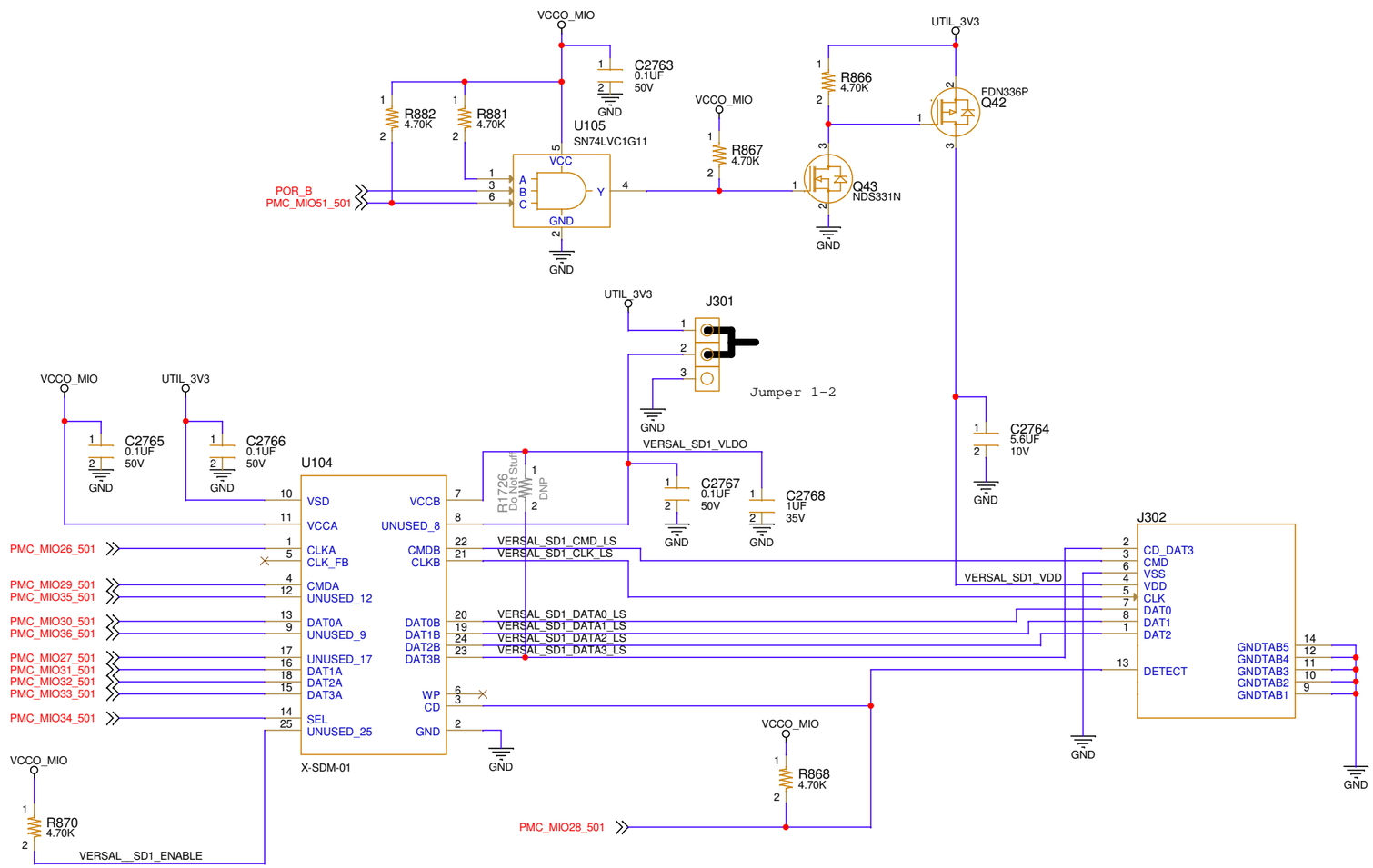

U104 IP4856CX25 Adapter Pin-Out

Aires Adapter Pin Number	IP4856CX25 Pin Number	IP4856CX25 Pin Name
1	C1	CLK_IN
2	C3	GND
3	D3	CD
4	D2	CMD_H
5	E2	CLK_FB
6	E4	WP
7	B4	VLDO
8	C4	VSD_REF
9	A3	DIR_0
10	A4	VSUPPLY
11	B3	VCCA
12	A2	DIR_CMD
13	D1	DATA0_H
14	B2	SEL
15	B1	DATA3_H
16	E1	DATA1_H
17	E3	DIR_1_3
18	A1	DATA2_H
19	E5	DATA1_SD
20	D5	DATA0_SD
21	C5	CLK_SD
22	D4	CMD_SD
23	B5	DATA3_SD
24	A5	DATA2_SD
25	C2	ENABLE

AMD

AECG
2100 LOGIC DRIVE
SAN JOSE CA

PAGE: **076 SD1 & Level Shifter**

PAGE NUMBER: **76** OF **108**

DOC NO: **038-05005-01**

DATE: **Thursday, June 22, 2023** REV: **13**

SKU: **VCK190**

CONFIDENTIAL AND PROPRIETARY TO ADVANCED MICRO DEVICES INC.

© 2021 Advanced Micro Devices

This AMD Board schematic and design is the exclusive property of AMD, and is provided only to entities under a non-disclosure agreement with AMD for evaluation purposes. Further distribution or disclosure is strictly prohibited. Use of this schematic and design for any purpose other than evaluation requires a Board Technology License Agreement with AMD. AMD makes no representations or warranties of any kind regarding this schematic and design, including, not limited to, any implied warranty of merchantability or fitness for a particular purpose, and disclaims responsibility for any consequences resulting from use of the information included herein.

TITLE:**VCK190/VMK180**

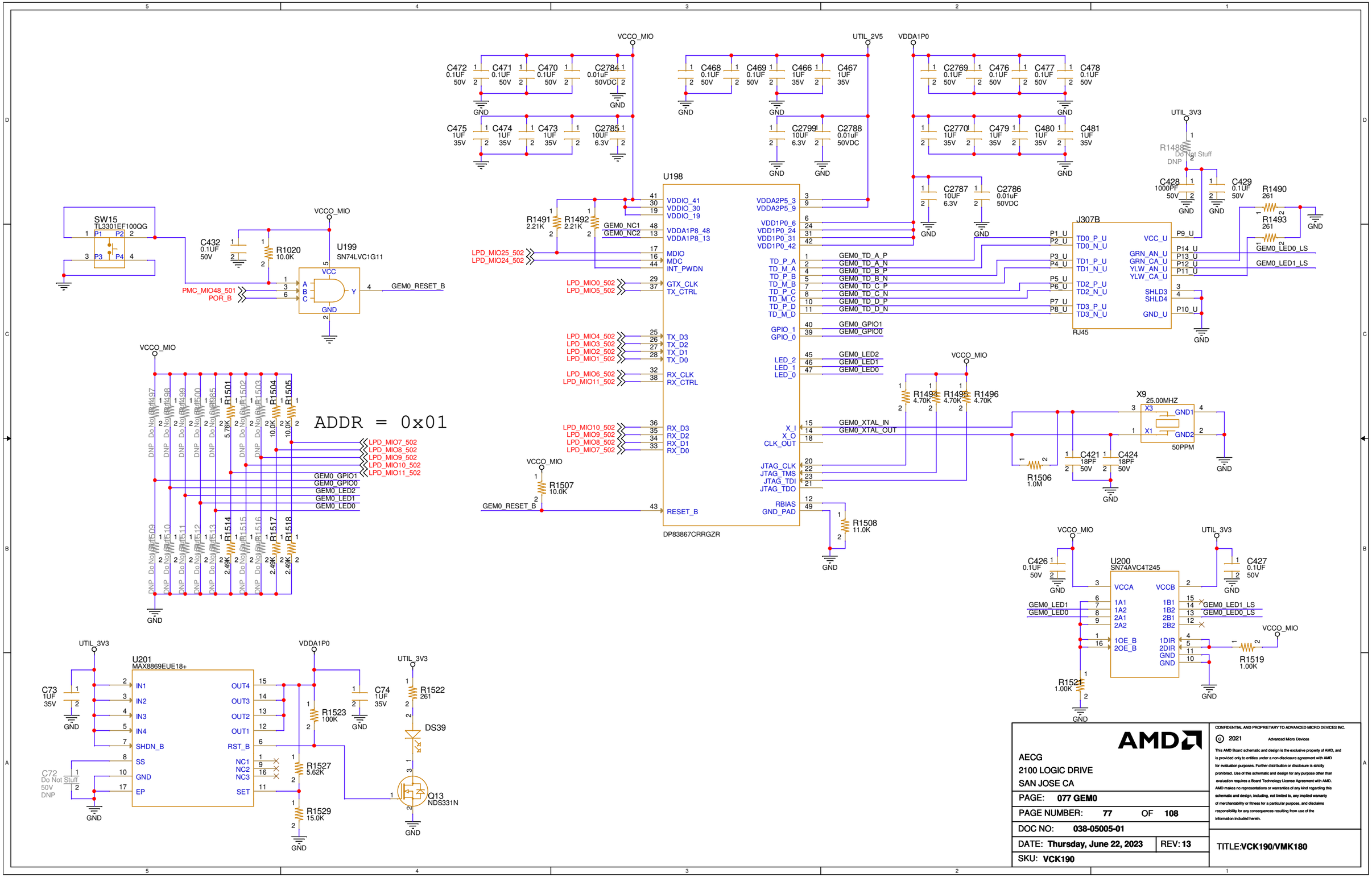

AMD

AECG
2100 LOGIC DRIVE
SAN JOSE CA

PAGE: 077 GEM0

PAGE NUMBER: 77 OF 108

DOC NO: 038-05005-01

DATE: Thursday, June 22, 2023 REV: 13

SKU: VCK190

CONFIDENTIAL AND PROPRIETARY TO ADVANCED MICRO DEVICES INC.

© 2021 Advanced Micro Devices

This AMD Board schematic and design is the exclusive property of AMD, and is provided only to entities under a non-disclosure agreement with AMD for evaluation purposes. Further distribution or disclosure is strictly prohibited. Use of this schematic and design for any purpose other than evaluation requires a Board Technology License Agreement with AMD. AMD makes no representations or warranties of any kind regarding this schematic and design, including, not limited to, any implied warranty of merchantability or fitness for a particular purpose, and disclaims responsibility for any consequences resulting from use of the information included herein.

TITLE: VCK190/VMK180

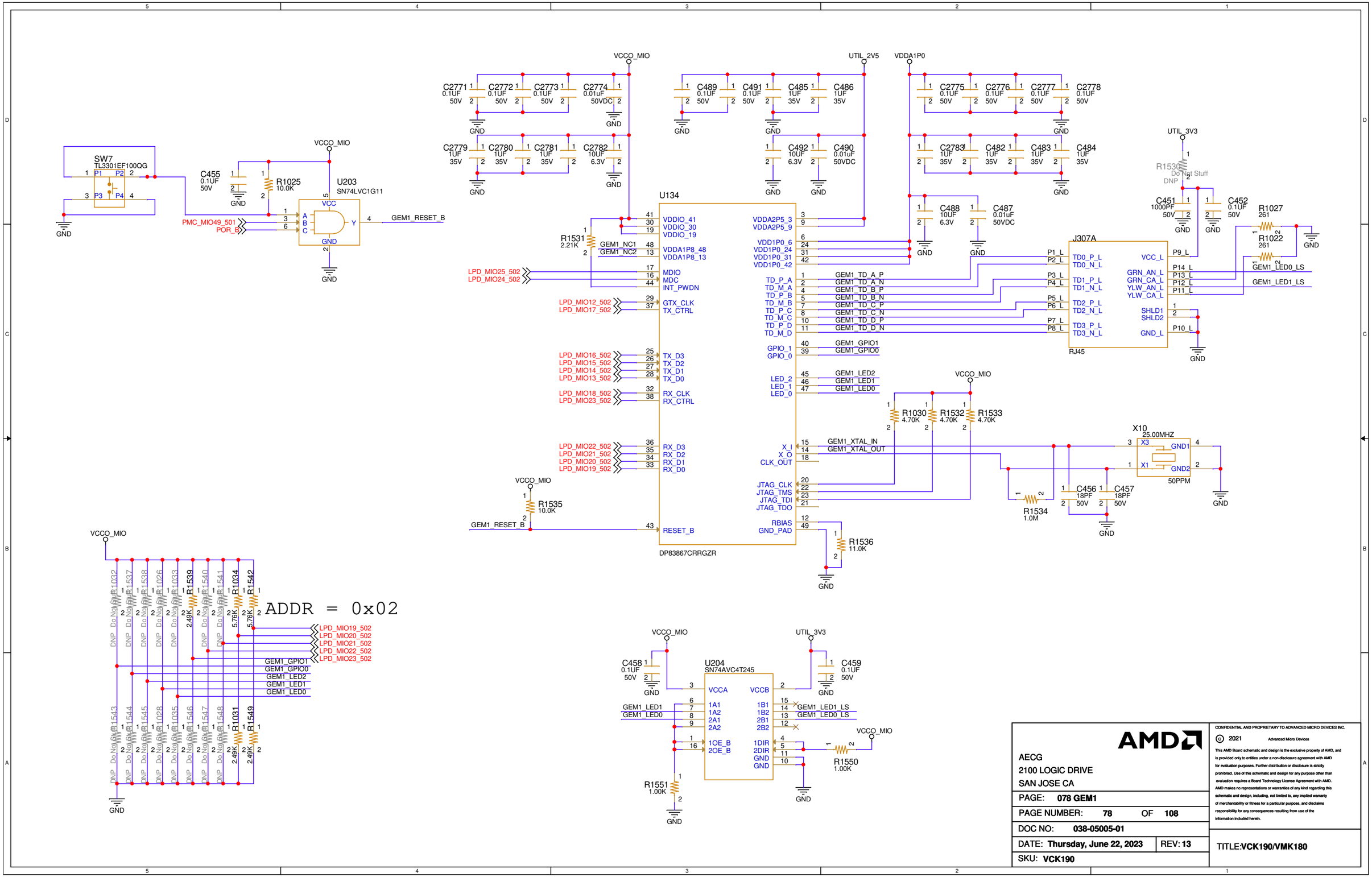

AMD

AECG
2100 LOGIC DRIVE
SAN JOSE CA

PAGE:	078 GEM1
PAGE NUMBER:	78 OF 108
DOC NO:	038-05005-01
DATE: Thursday, June 22, 2023	REV: 13
SKU: VCK190	

CONFIDENTIAL AND PROPRIETARY TO ADVANCED MICRO DEVICES INC.
© 2021 Advanced Micro Devices
This AMD Board schematic and design is the exclusive property of AMD, and is provided only to entities under a non-disclosure agreement with AMD for evaluation purposes. Further distribution or disclosure is strictly prohibited. Use of this schematic and design for any purpose other than evaluation requires a Board Technology License Agreement with AMD. AMD makes no representations or warranties of any kind regarding this schematic and design, including, not limited to, any implied warranty of merchantability or fitness for a particular purpose, and disclaims responsibility for any consequences resulting from use of the information included herein.

TITLE: VCK190/VMK180

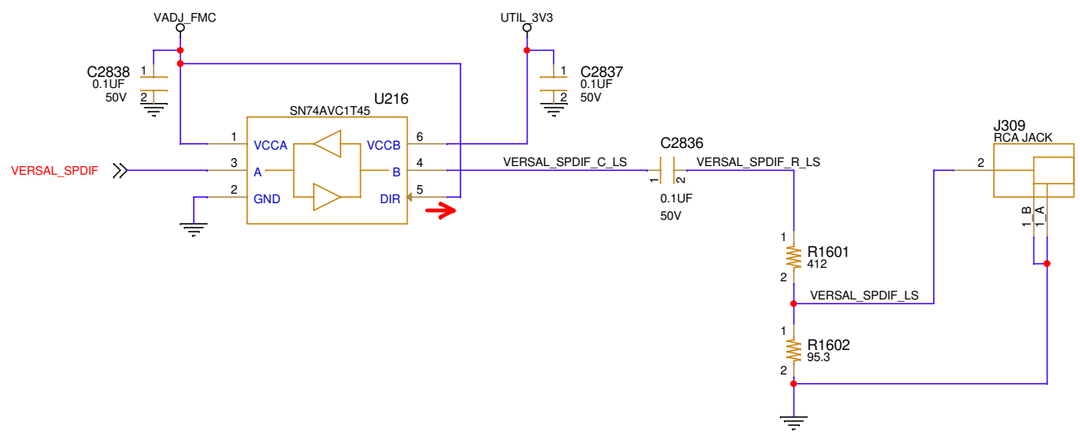

Route with 75 Ohm trace impedance

AECG
2100 LOGIC DRIVE
SAN JOSE CA

PAGE: **079 SPDIF Interface**

PAGE NUMBER: **79** OF **108**

DOC NO: **038-05005-01**

DATE: **Thursday, June 22, 2023** REV: **13**

SKU: **VCK190**

CONFIDENTIAL AND PROPRIETARY TO ADVANCED MICRO DEVICES INC.
© 2021 Advanced Micro Devices
This AMD Board schematic and design is the exclusive property of AMD, and is provided only to entities under a non-disclosure agreement with AMD for evaluation purposes. Further distribution or disclosure is strictly prohibited. Use of this schematic and design for any purpose other than evaluation requires a Board Technology License Agreement with AMD. AMD makes no representations or warranties of any kind regarding this schematic and design, including, not limited to, any implied warranty of merchantability or fitness for a particular purpose, and disclaims responsibility for any consequences resulting from use of the information included herein.

TITLE:**VCK190/VMK180**

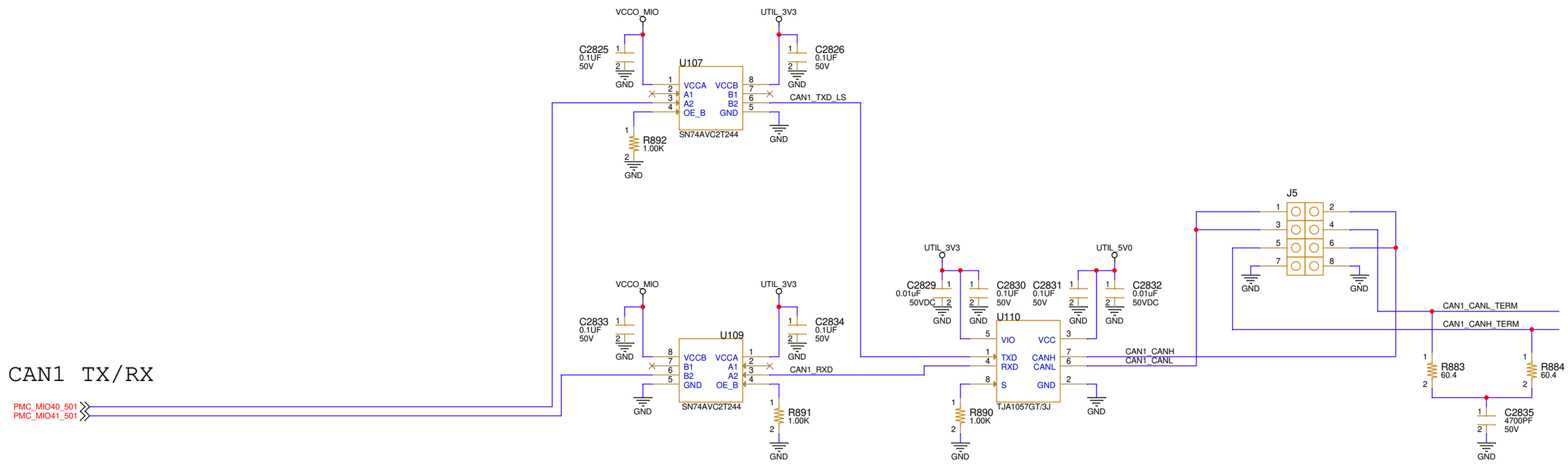

AECG
2100 LOGIC DRIVE
SAN JOSE CA

PAGE:	080 CAN Interface
PAGE NUMBER:	80 OF 108
DOC NO:	038-05005-01
DATE: Thursday, June 22, 2023	REV: 13
SKU: VCK190	

CONFIDENTIAL AND PROPRIETARY TO ADVANCED MICRO DEVICES INC.
© 2021 Advanced Micro Devices
This AMD Board schematic and design is the exclusive property of AMD, and is provided only to entities under a non-disclosure agreement with AMD for evaluation purposes. Further distribution or disclosure is strictly prohibited. Use of this schematic and design for any purpose other than evaluation requires a Board Technology License Agreement with AMD. AMD makes no representations or warranties of any kind regarding this schematic and design, including, not limited to, any implied warranty of merchantability or fitness for a particular purpose, and disclaims responsibility for any consequences resulting from use of the information included herein.

TITLE: VCK190/VMK180

AECG
2100 LOGIC DRIVE
SAN JOSE CA

PAGE: **081 UTIL_2V5 Regulator**

PAGE NUMBER: **81** OF **108**

DOC NO: **038-05005-01**

DATE: **Thursday, June 22, 2023** REV: **13**

SKU: **VCK190**

CONFIDENTIAL AND PROPRIETARY TO ADVANCED MICRO DEVICES INC.

© 2021 Advanced Micro Devices

This AMD Board schematic and design is the exclusive property of AMD, and is provided only to entities under a non-disclosure agreement with AMD for evaluation purposes. Further distribution or disclosure is strictly prohibited. Use of this schematic and design for any purpose other than evaluation requires a Board Technology License Agreement with AMD. AMD makes no representations or warranties of any kind regarding this schematic and design, including, not limited to, any implied warranty of merchantability or fitness for a particular purpose, and disclaims responsibility for any consequences resulting from use of the information included herein.

TITLE:**VCK190/VMK180**

AECG
2100 LOGIC DRIVE
SAN JOSE CA

PAGE: **082 Blank**

PAGE NUMBER: **82** OF **108**

DOC NO: **038-05005-01**

DATE: **Thursday, June 22, 2023** REV: **13**

SKU: **VCK190**

CONFIDENTIAL AND PROPRIETARY TO ADVANCED MICRO DEVICES INC.

© 2021 Advanced Micro Devices

This AMD Board schematic and design is the exclusive property of AMD, and is provided only to entities under a non-disclosure agreement with AMD for evaluation purposes. Further distribution or disclosure is strictly prohibited. Use of this schematic and design for any purpose other than evaluation requires a Board Technology License Agreement with AMD. AMD makes no representations or warranties of any kind regarding this schematic and design, including, not limited to, any implied warranty of merchantability or fitness for a particular purpose, and disclaims responsibility for any consequences resulting from use of the information included herein.

TITLE:**VCK190/VMK180**

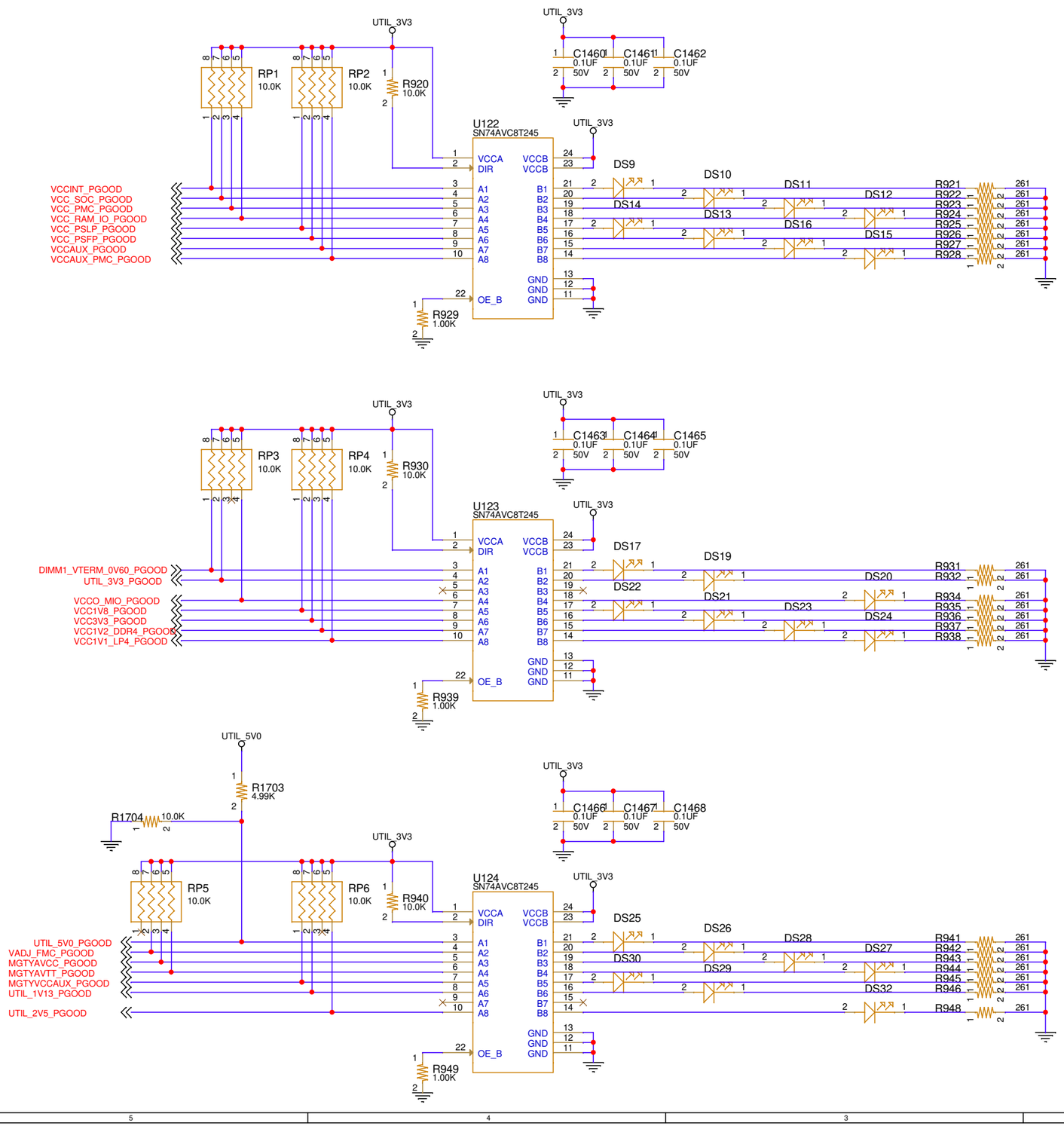

AMD

AECG
2100 LOGIC DRIVE
SAN JOSE CA

PAGE:	083 Power Good LEDs
PAGE NUMBER:	83 OF 108
DOC NO:	038-05005-01
DATE: Thursday, June 22, 2023	REV: 13
SKU: VCK190	

CONFIDENTIAL AND PROPRIETARY TO ADVANCED MICRO DEVICES INC.
© 2021 Advanced Micro Devices
This AMD Board schematic and design is the exclusive property of AMD, and is provided only to entities under a non-disclosure agreement with AMD for evaluation purposes. Further distribution or disclosure is strictly prohibited. Use of this schematic and design for any purpose other than evaluation requires a Board Technology License Agreement with AMD. AMD makes no representations or warranties of any kind regarding this schematic and design, including, not limited to, any implied warranty of merchantability or fitness for a particular purpose, and disclaims responsibility for any consequences resulting from use of the information included herein.

TITLE: VCK190/VMK180

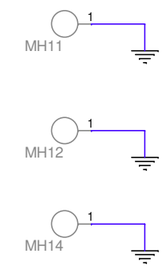

ADD PCIe Panel

AECG
2100 LOGIC DRIVE
SAN JOSE CA

PAGE:	**084 Mechanicals**
PAGE NUMBER:	**84** OF **108**
DOC NO:	**038-05005-01**
DATE: **Thursday, June 22, 2023**	REV: **13**
SKU: **VCK190**	

CONFIDENTIAL AND PROPRIETARY TO ADVANCED MICRO DEVICES INC.
© 2021 Advanced Micro Devices
This AMD Board schematic and design is the exclusive property of AMD, and is provided only to entities under a non-disclosure agreement with AMD for evaluation purposes. Further distribution or disclosure is strictly prohibited. Use of this schematic and design for any purpose other than evaluation requires a Board Technology License Agreement with AMD. AMD makes no representations or warranties of any kind regarding this schematic and design, including, not limited to, any implied warranty of merchantability or fitness for a particular purpose, and disclaims responsibility for any consequences resulting from use of the information included herein.

TITLE:**VCK190/VMK180**

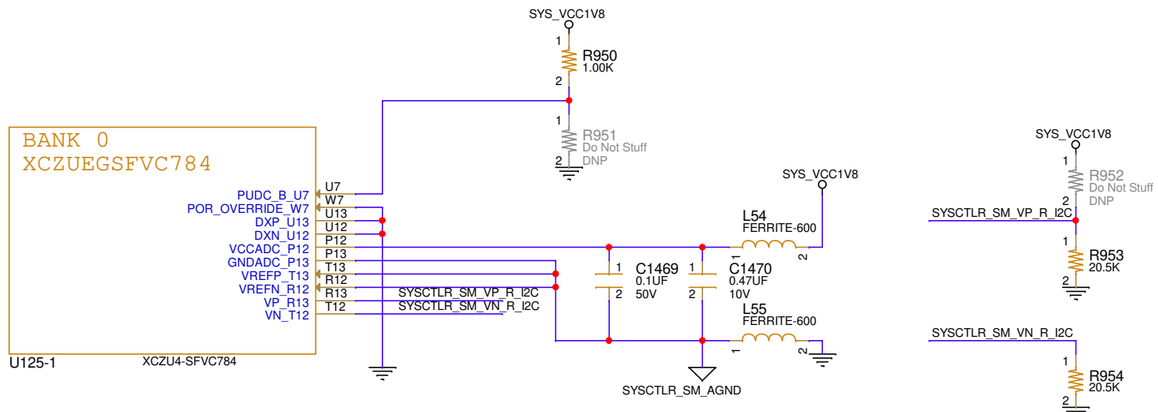

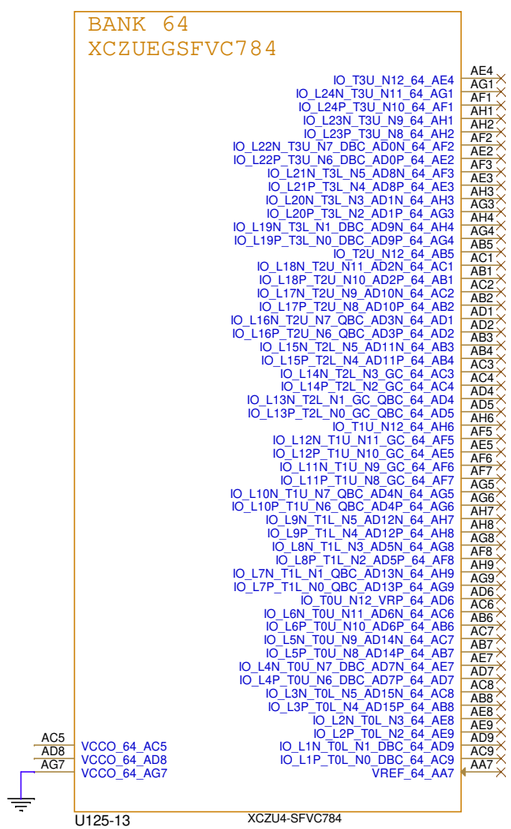

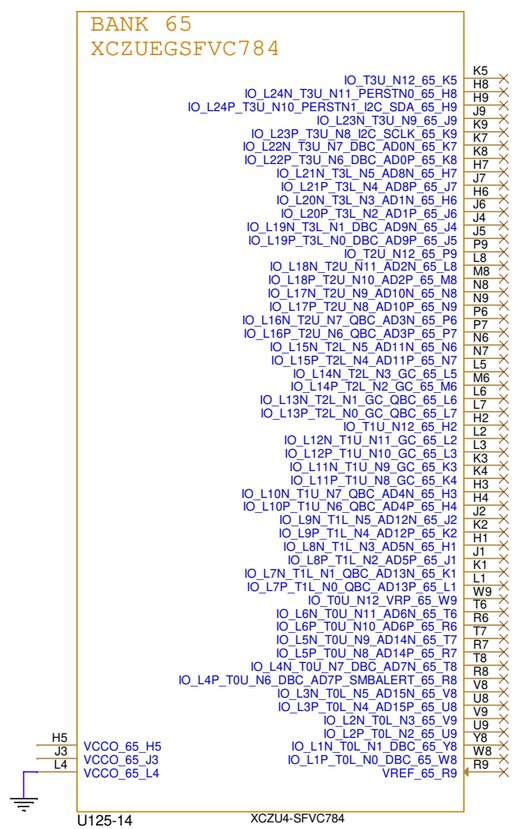

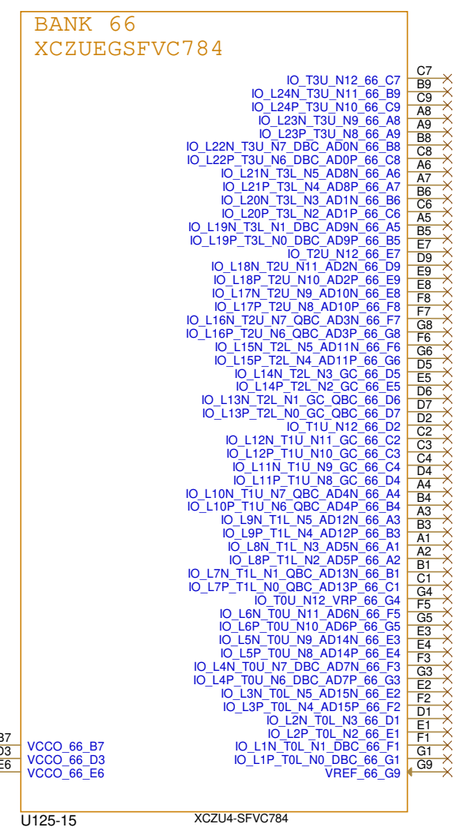

AMD

AECG
2100 LOGIC DRIVE
SAN JOSE CA

PAGE:	085 Sys Ctlr Bank 0 - NC Banks
PAGE NUMBER:	85 OF 108
DOC NO:	038-05005-01
DATE: Thursday, June 22, 2023	REV: 13
SKU: VCK190	

CONFIDENTIAL AND PROPRIETARY TO ADVANCED MICRO DEVICES INC.
© 2021 Advanced Micro Devices
This AMD Board schematic and design is the exclusive property of AMD, and is provided only to entities under a non-disclosure agreement with AMD for evaluation purposes. Further distribution or disclosure is strictly prohibited. Use of this schematic and design for any purpose other than evaluation requires a Board Technology License Agreement with AMD. AMD makes no representations or warranties of any kind regarding this schematic and design, including, not limited to, any implied warranty of merchantability or fitness for a particular purpose, and disclaims responsibility for any consequences resulting from use of the information included herein.

TITLE: VCK190/VMK180

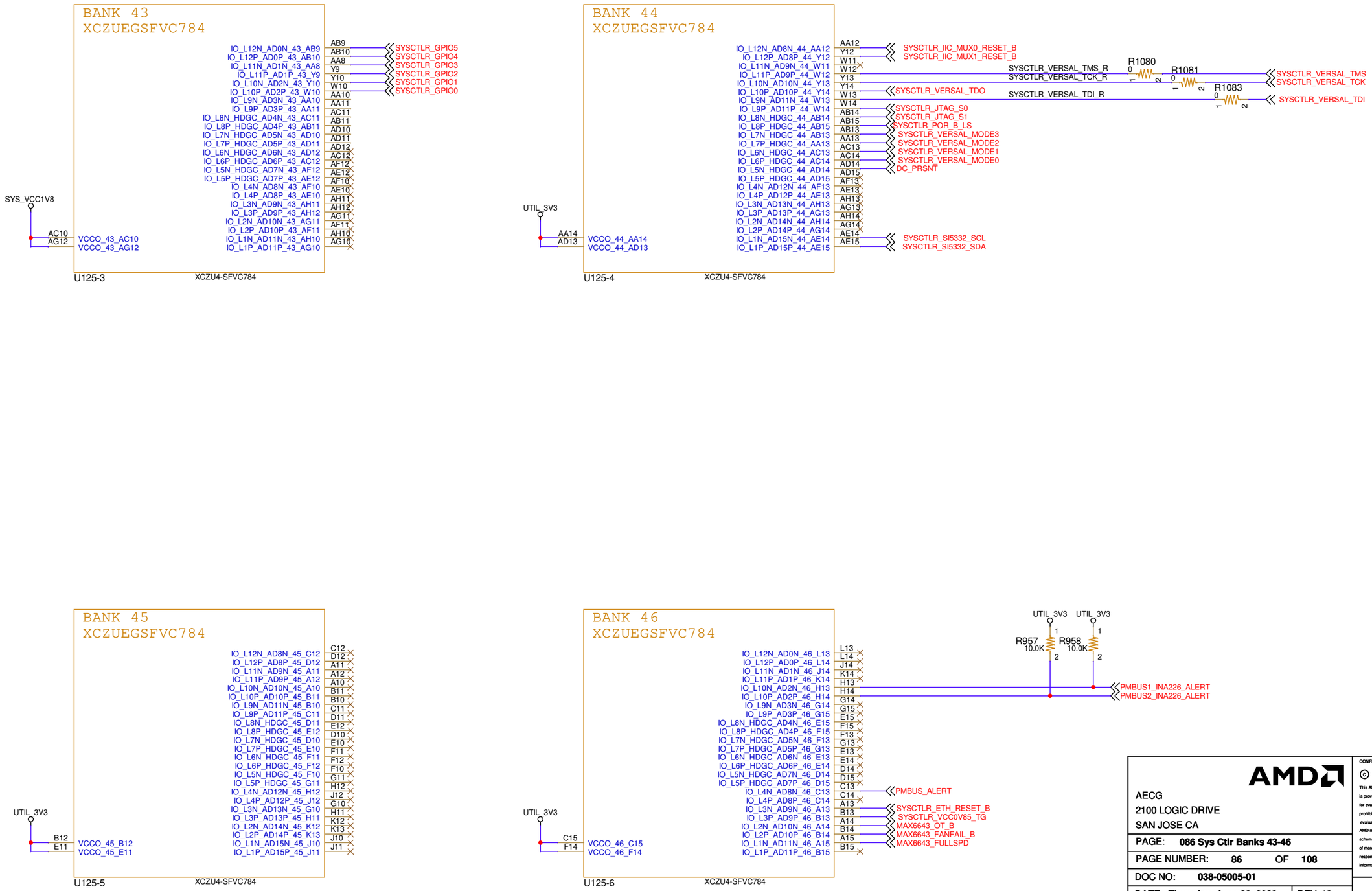

AECG
2100 LOGIC DRIVE
SAN JOSE CA

PAGE: **086 Sys Ctlr Banks 43-46**

PAGE NUMBER: **86** OF **108**

DOC NO: **038-05005-01**

DATE: **Thursday, June 22, 2023** REV: **13**

SKU: **VCK190**

CONFIDENTIAL AND PROPRIETARY TO ADVANCED MICRO DEVICES INC.

© 2021 Advanced Micro Devices

This AMD Board schematic and design is the exclusive property of AMD, and is provided only to entities under a non-disclosure agreement with AMD for evaluation purposes. Further distribution or disclosure is strictly prohibited. Use of this schematic and design for any purpose other than evaluation requires a Board Technology License Agreement with AMD. AMD makes no representations or warranties of any kind regarding this schematic and design, including, not limited to, any implied warranty of merchantability or fitness for a particular purpose, and disclaims responsibility for any consequences resulting from use of the information included herein.

TITLE: **VCK190/VMK180**

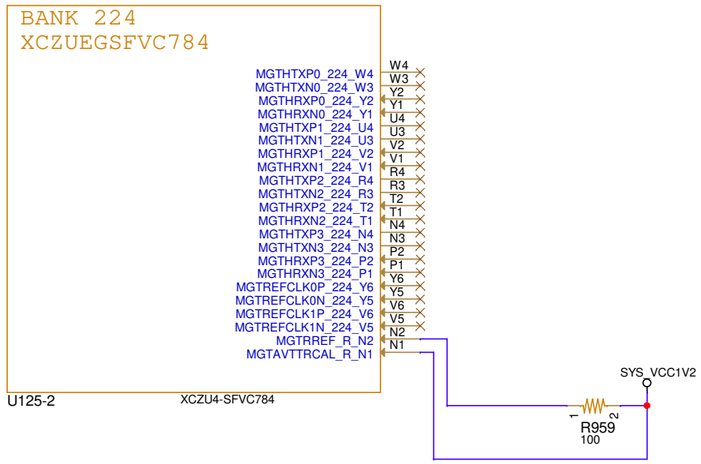

AECG
2100 LOGIC DRIVE
SAN JOSE CA

PAGE: **087 Sys Ctlr Bank 224**

PAGE NUMBER: **87** OF **108**

DOC NO: **038-05005-01**

DATE: **Thursday, June 22, 2023** REV: **13**

SKU: **VCK190**

CONFIDENTIAL AND PROPRIETARY TO ADVANCED MICRO DEVICES INC.

© 2021 Advanced Micro Devices

This AMD Board schematic and design is the exclusive property of AMD, and is provided only to entities under a non-disclosure agreement with AMD for evaluation purposes. Further distribution or disclosure is strictly prohibited. Use of this schematic and design for any purpose other than evaluation requires a Board Technology License Agreement with AMD. AMD makes no representations or warranties of any kind regarding this schematic and design, including, not limited to, any implied warranty of merchantability or fitness for a particular purpose, and disclaims responsibility for any consequences resulting from use of the information included herein.

TITLE: **VCK190/VMK180**

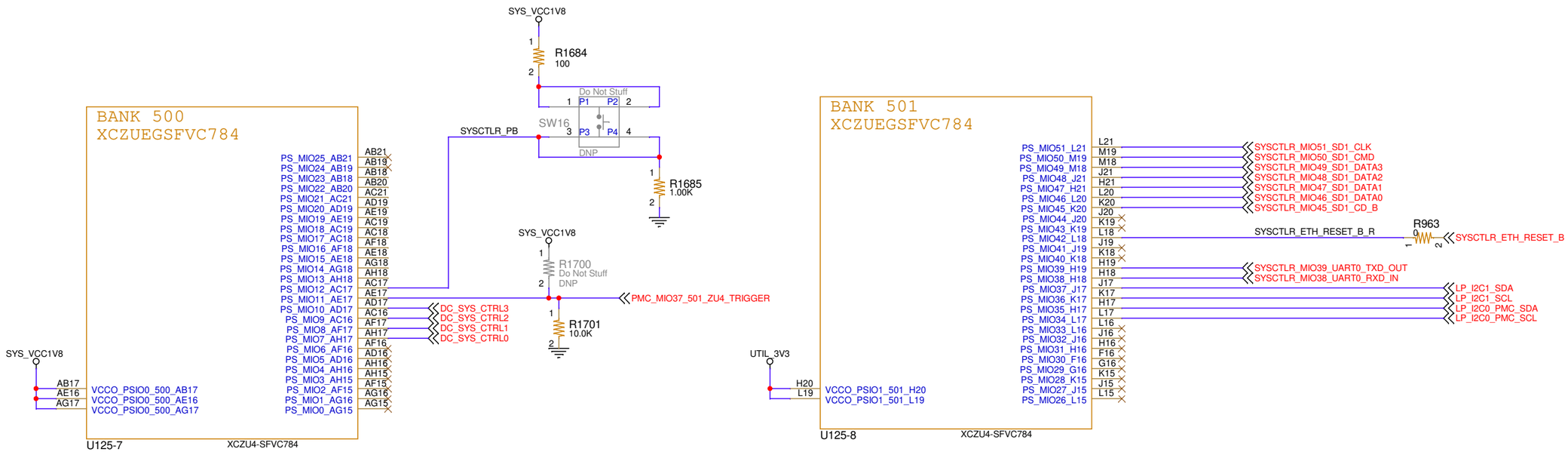

AECG
2100 LOGIC DRIVE
SAN JOSE CA

PAGE: **088 Sys Ctlr Banks 500 501 502**

PAGE NUMBER: **88** OF **108**

DOC NO: **038-05005-01**

DATE: **Thursday, June 22, 2023** REV: **13**

SKU: **VCK190**

CONFIDENTIAL AND PROPRIETARY TO ADVANCED MICRO DEVICES INC.

© 2021 Advanced Micro Devices

This AMD Board schematic and design is the exclusive property of AMD, and is provided only to entities under a non-disclosure agreement with AMD for evaluation purposes. Further distribution or disclosure is strictly prohibited. Use of this schematic and design for any purpose other than evaluation requires a Board Technology License Agreement with AMD. AMD makes no representations or warranties of any kind regarding this schematic and design, including, not limited to, any implied warranty of merchantability or fitness for a particular purpose, and disclaims responsibility for any consequences resulting from use of the information included herein.

TITLE: **VCK190/VMK180**

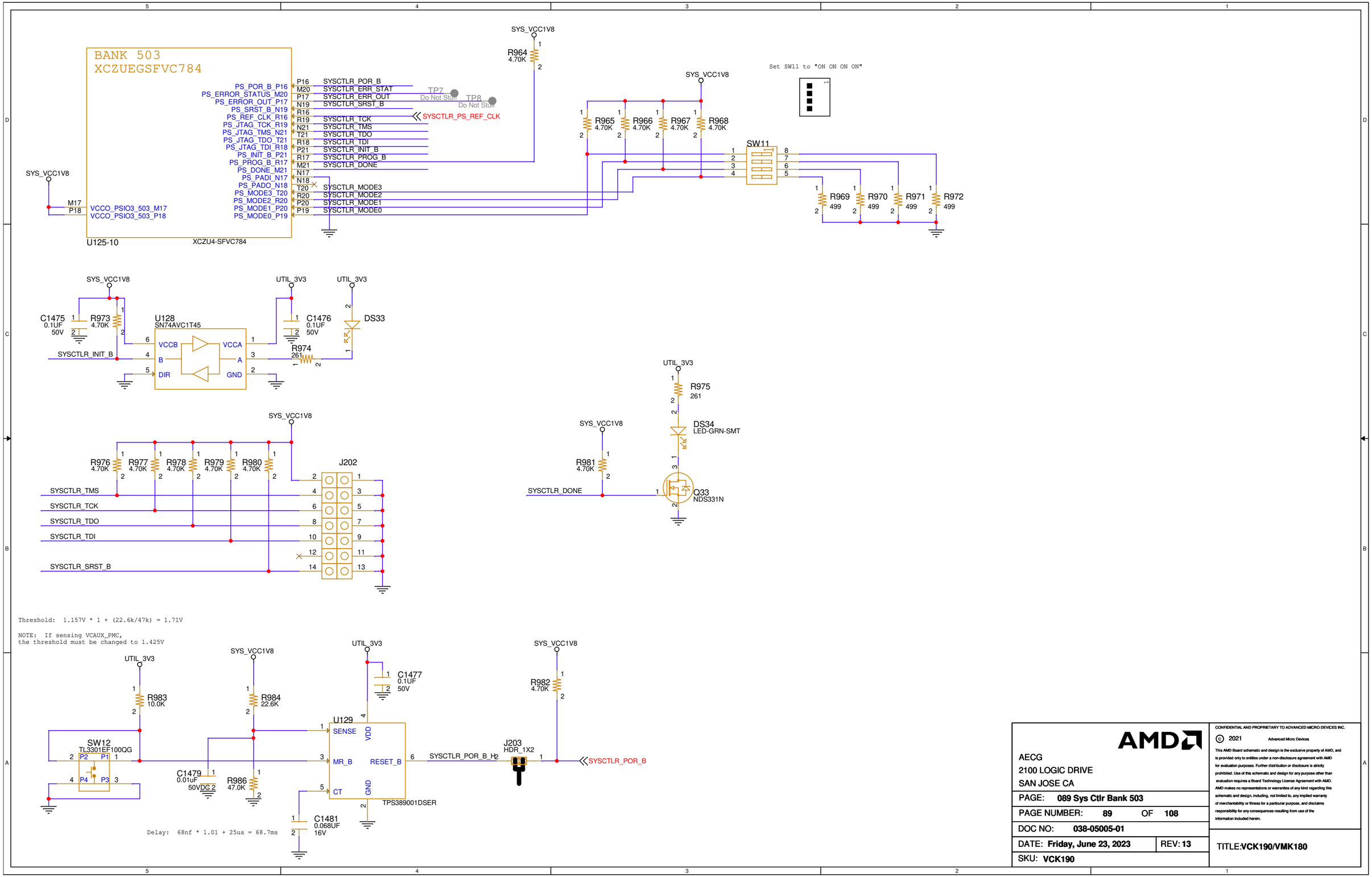

AECG
2100 LOGIC DRIVE
SAN JOSE CA

PAGE:	089 Sys Ctlr Bank 503
PAGE NUMBER:	89 OF 108
DOC NO:	038-05005-01
DATE: Friday, June 23, 2023	REV: 13
SKU: VCK190	

CONFIDENTIAL AND PROPRIETARY TO ADVANCED MICRO DEVICES INC.
© 2021 Advanced Micro Devices
This AMD Board schematic and design is the exclusive property of AMD, and is provided only to entities under a non-disclosure agreement with AMD for evaluation purposes. Further distribution or disclosure is strictly prohibited. Use of this schematic and design for any purpose other than evaluation requires a Board Technology License Agreement with AMD. AMD makes no representations or warranties of any kind regarding this schematic and design, including, not limited to, any implied warranty of merchantability or fitness for a particular purpose, and disclaims responsibility for any consequences resulting from use of the information included herein.

TITLE: VCK190/VMK180

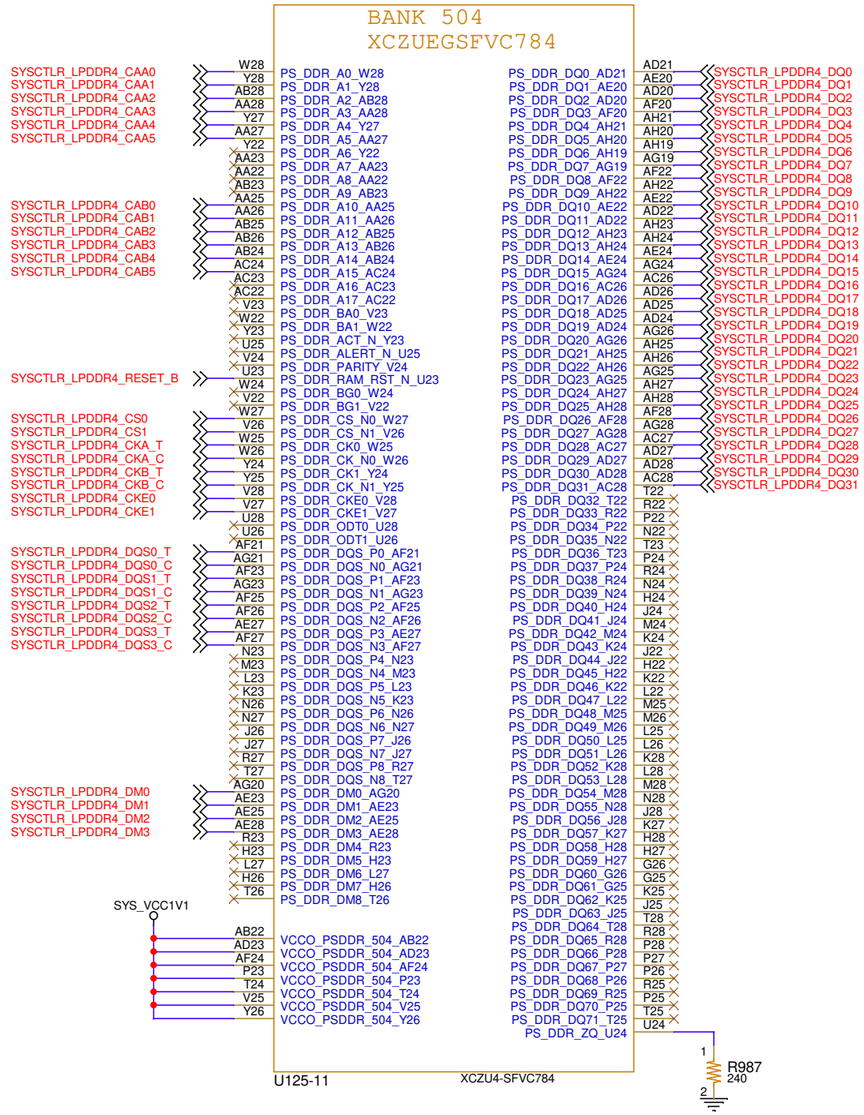

AECG
2100 LOGIC DRIVE
SAN JOSE CA

PAGE:	090 Sys Ctlr Bank 504
PAGE NUMBER:	90 OF 108
DOC NO:	038-05005-01
DATE: Friday, June 23, 2023	REV: 13
SKU: VCK190	

CONFIDENTIAL AND PROPRIETARY TO ADVANCED MICRO DEVICES INC.
© 2021 Advanced Micro Devices
This AMD Board schematic and design is the exclusive property of AMD, and is provided only to entities under a non-disclosure agreement with AMD for evaluation purposes. Further distribution or disclosure is strictly prohibited. Use of this schematic and design for any purpose other than evaluation requires a Board Technology License Agreement with AMD. AMD makes no representations or warranties of any kind regarding this schematic and design, including, not limited to, any implied warranty of merchantability or fitness for a particular purpose, and disclaims responsibility for any consequences resulting from use of the information included herein.

TITLE: VCK190/VMK180

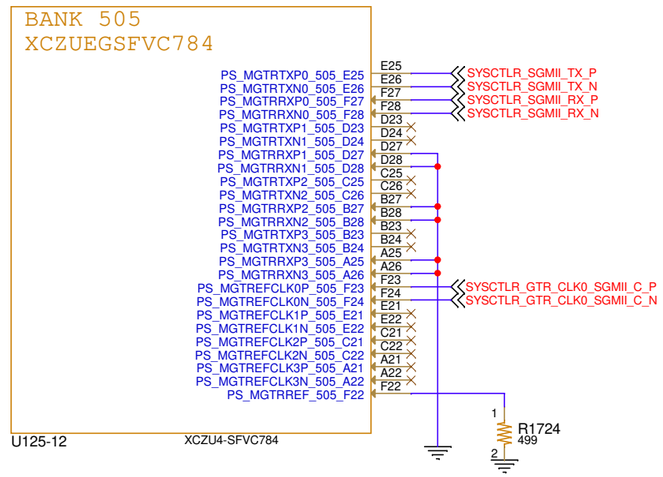

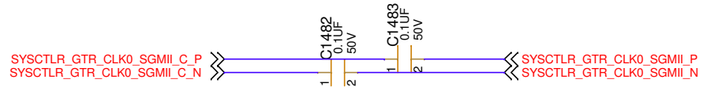

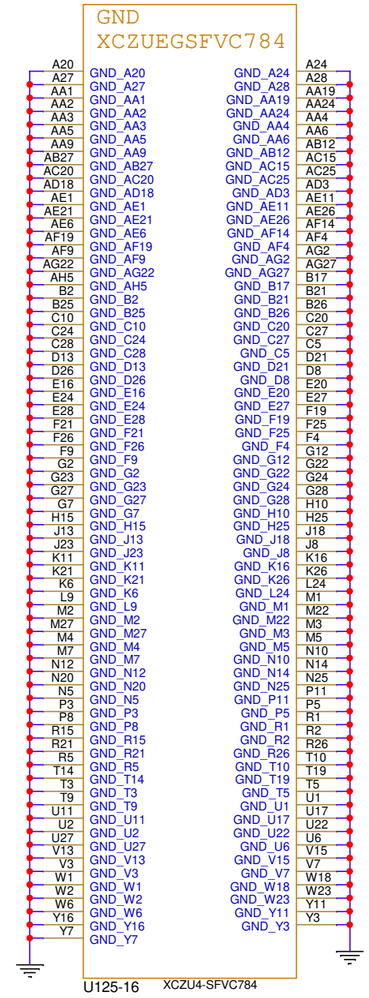

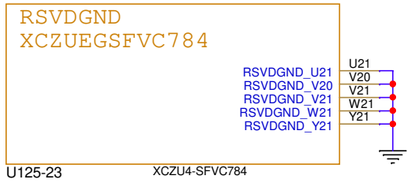

AMD

AECG
2100 LOGIC DRIVE
SAN JOSE CA

PAGE: **091 Sys Ctlr Bank 505 - GND**

PAGE NUMBER: **91** OF **108**

DOC NO: **038-05005-01**

DATE: **Friday, June 23, 2023** REV: **13**

SKU: **VCK190**

CONFIDENTIAL AND PROPRIETARY TO ADVANCED MICRO DEVICES INC.

© 2021 Advanced Micro Devices

This AMD Board schematic and design is the exclusive property of AMD, and is provided only to entities under a non-disclosure agreement with AMD for evaluation purposes. Further distribution or disclosure is strictly prohibited. Use of this schematic and design for any purpose other than evaluation requires a Board Technology License Agreement with AMD. AMD makes no representations or warranties of any kind regarding this schematic and design, including, not limited to, any implied warranty of merchantability or fitness for a particular purpose, and disclaims responsibility for any consequences resulting from use of the information included herein.

TITLE: **VCK190/VMK180**

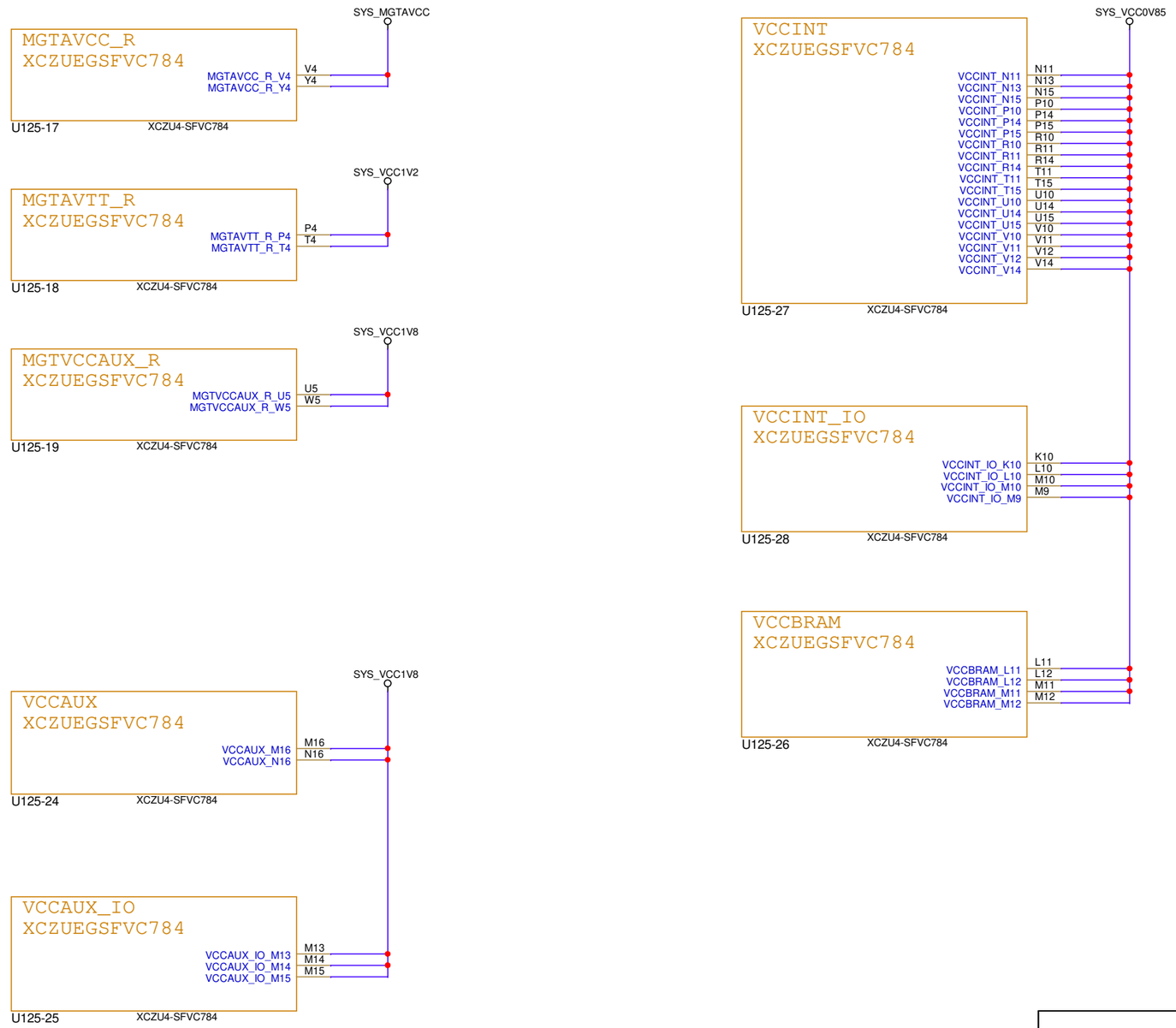

AECG
2100 LOGIC DRIVE
SAN JOSE CA

PAGE:	092 Sys Ctlr Zynq Power 1
PAGE NUMBER:	92 OF 108
DOC NO:	038-05005-01
DATE: Friday, June 23, 2023	REV: 13
SKU: VCK190	

CONFIDENTIAL AND PROPRIETARY TO ADVANCED MICRO DEVICES INC.
© 2021 Advanced Micro Devices
This AMD Board schematic and design is the exclusive property of AMD, and is provided only to entities under a non-disclosure agreement with AMD for evaluation purposes. Further distribution or disclosure is strictly prohibited. Use of this schematic and design for any purpose other than evaluation requires a Board Technology License Agreement with AMD. AMD makes no representations or warranties of any kind regarding this schematic and design, including, not limited to, any implied warranty of merchantability or fitness for a particular purpose, and disclaims responsibility for any consequences resulting from use of the information included herein.

TITLE: VCK190/VMK180

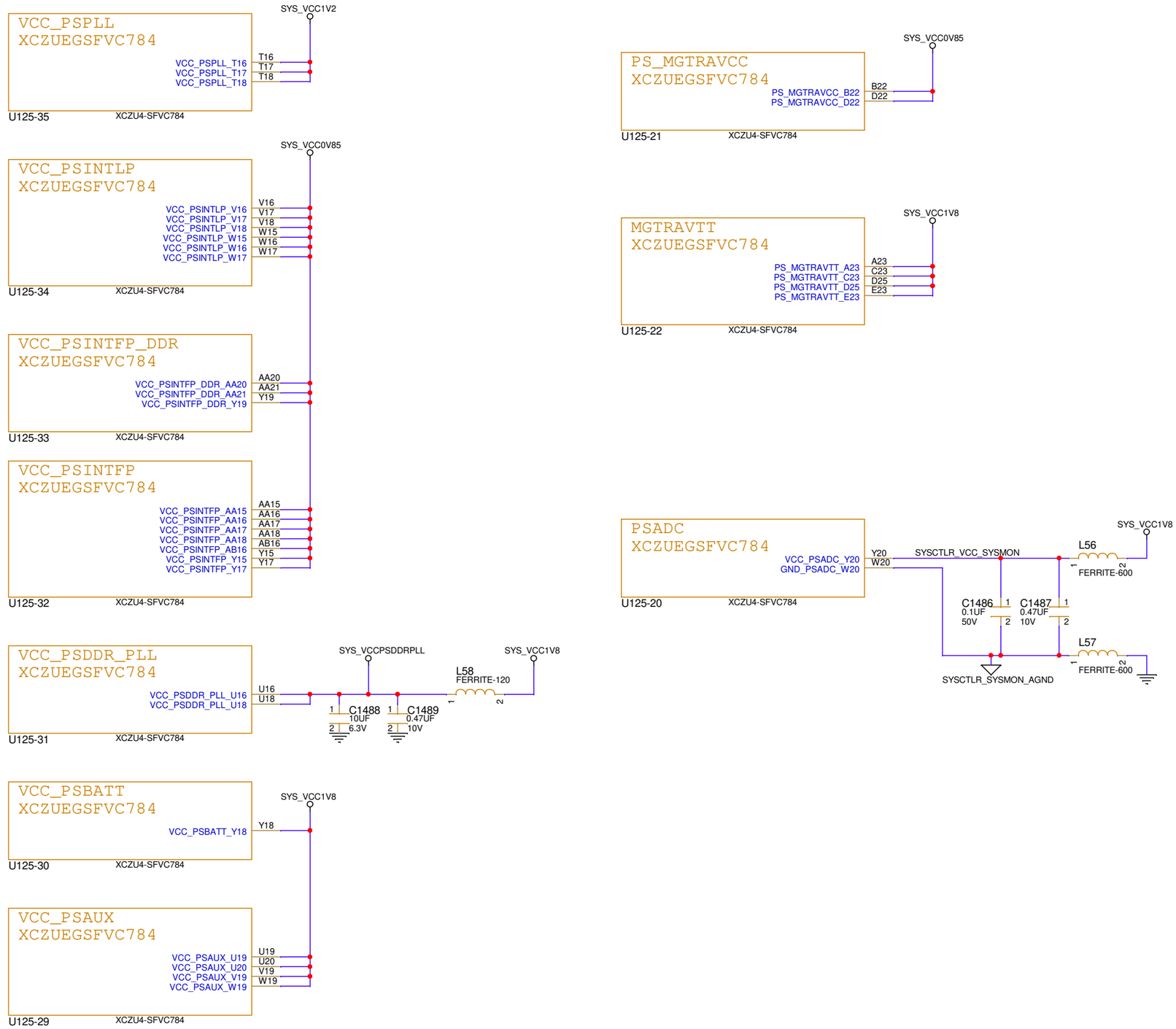

AMD

AECG
2100 LOGIC DRIVE
SAN JOSE CA

PAGE: **093 Sys Ctlr Zynq Power 2**

PAGE NUMBER: **93** OF **108**

DOC NO: **038-05005-01**

DATE: **Friday, June 23, 2023** REV: **13**

SKU: **VCK190**

CONFIDENTIAL AND PROPRIETARY TO ADVANCED MICRO DEVICES INC.

© 2021 Advanced Micro Devices

This AMD Board schematic and design is the exclusive property of AMD, and is provided only to entities under a non-disclosure agreement with AMD for evaluation purposes. Further distribution or disclosure is strictly prohibited. Use of this schematic and design for any purpose other than evaluation requires a Board Technology License Agreement with AMD. AMD makes no representations or warranties of any kind regarding this schematic and design, including, not limited to, any implied warranty of merchantability or fitness for a particular purpose, and disclaims responsibility for any consequences resulting from use of the information included herein.

TITLE:**VCK190/VMK180**

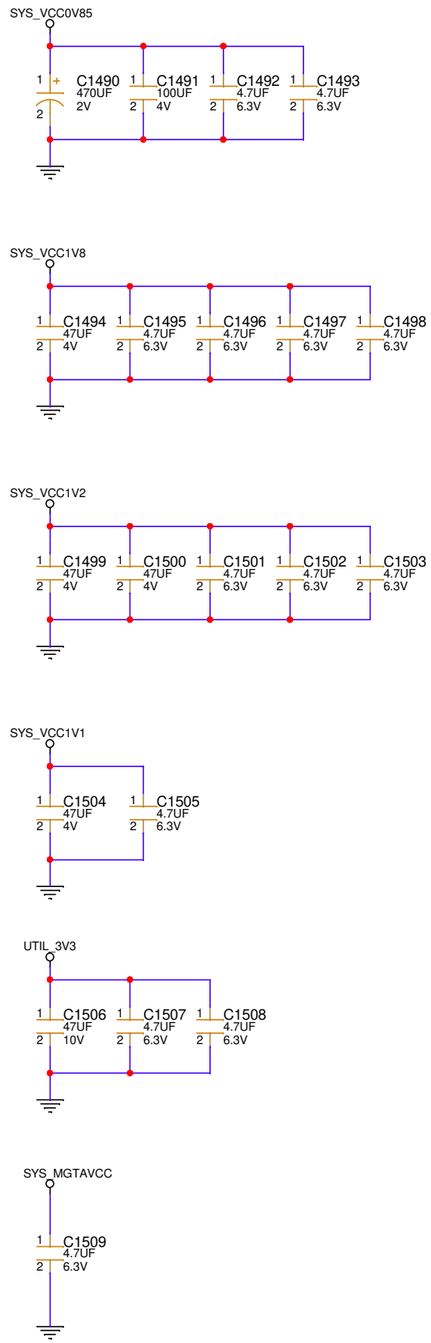

AECG
2100 LOGIC DRIVE
SAN JOSE CA

PAGE: **094 Sys Ctlr Zynq Decoupling**

PAGE NUMBER: **94** OF **108**

DOC NO: **038-05005-01**

DATE: **Friday, June 23, 2023** REV: **13**

SKU: **VCK190**

CONFIDENTIAL AND PROPRIETARY TO ADVANCED MICRO DEVICES INC.

© 2021 Advanced Micro Devices

This AMD Board schematic and design is the exclusive property of AMD, and is provided only to entities under a non-disclosure agreement with AMD for evaluation purposes. Further distribution or disclosure is strictly prohibited. Use of this schematic and design for any purpose other than evaluation requires a Board Technology License Agreement with AMD. AMD makes no representations or warranties of any kind regarding this schematic and design, including, not limited to, any implied warranty of merchantability or fitness for a particular purpose, and disclaims responsibility for any consequences resulting from use of the information included herein.

TITLE: **VCK190/VMK180**

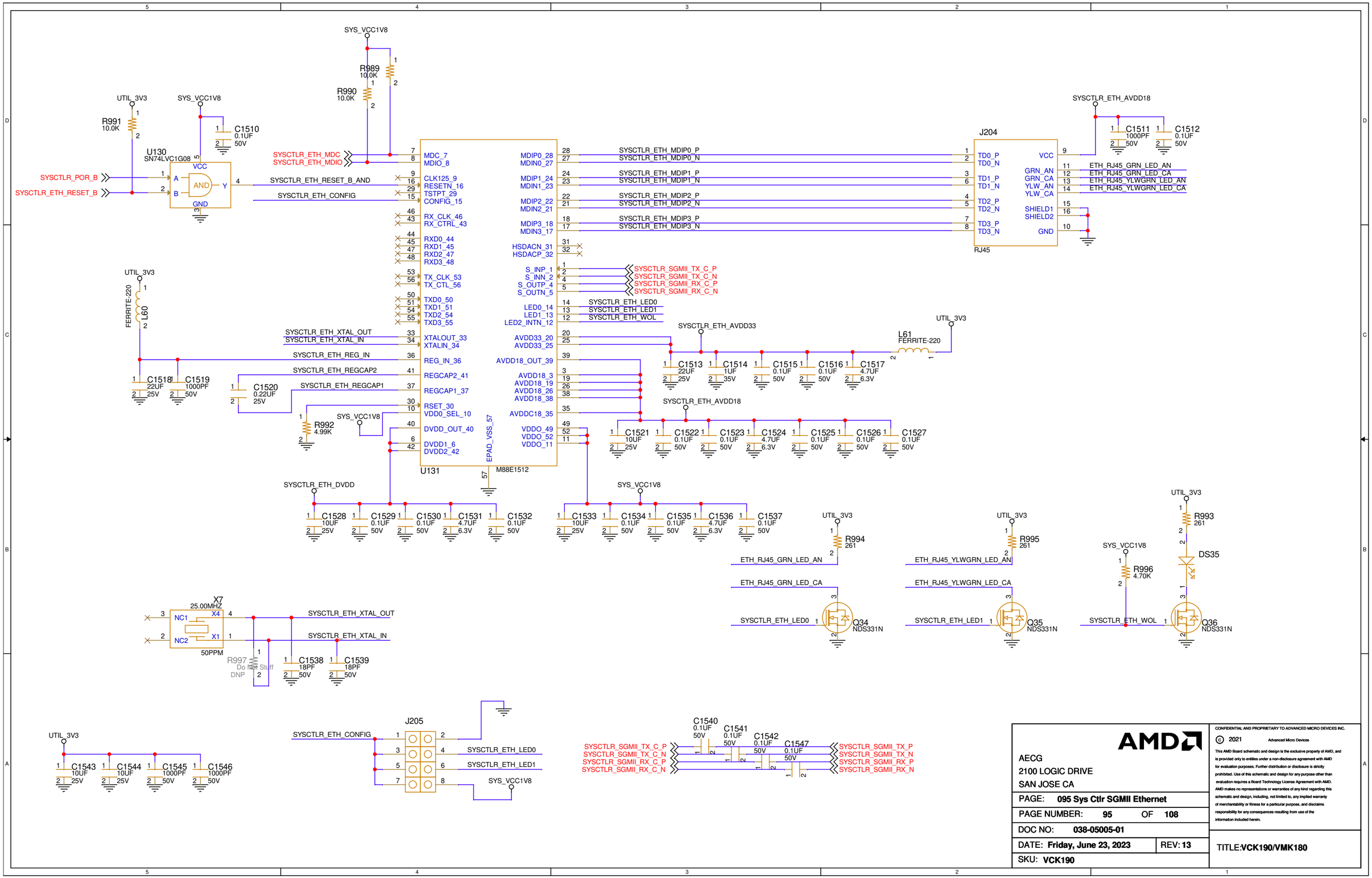

AECG
2100 LOGIC DRIVE
SAN JOSE CA

PAGE:	095 Sys Ctlr SGMII Ethernet
PAGE NUMBER:	95 OF 108
DOC NO:	038-05005-01
DATE: Friday, June 23, 2023	REV: 13
SKU: VCK190	

CONFIDENTIAL AND PROPRIETARY TO ADVANCED MICRO DEVICES INC.
© 2021 Advanced Micro Devices
This AMD Board schematic and design is the exclusive property of AMD, and is provided only to entities under a non-disclosure agreement with AMD for evaluation purposes. Further distribution or disclosure is strictly prohibited. Use of this schematic and design for any purpose other than evaluation requires a Board Technology License Agreement with AMD. AMD makes no representations or warranties of any kind regarding this schematic and design, including, not limited to, any implied warranty of merchantability or fitness for a particular purpose, and disclaims responsibility for any consequences resulting from use of the information included herein.

TITLE: VCK190/VMK180

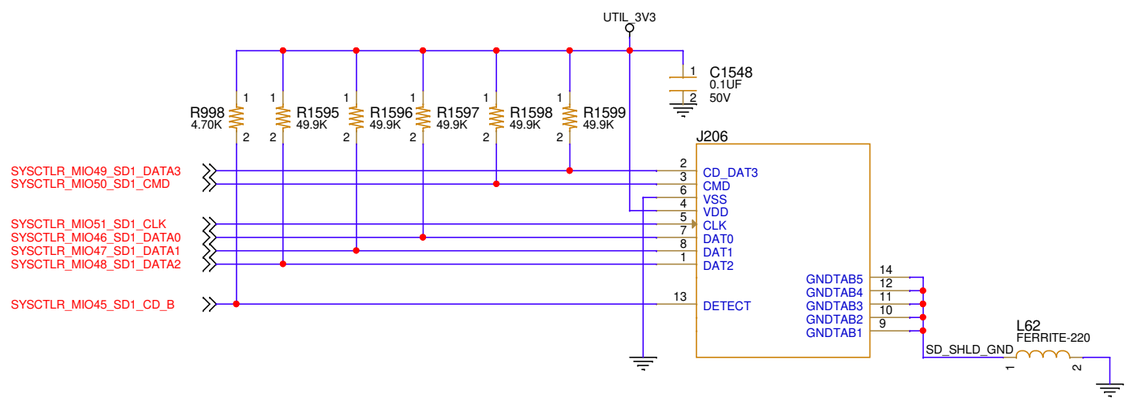

AECG
2100 LOGIC DRIVE
SAN JOSE CA

PAGE: **096 Sys Ctlr SD Card**

PAGE NUMBER: **96** OF **108**

DOC NO: **038-05005-01**

DATE: **Friday, June 23, 2023** REV: **13**

SKU: **VCK190**

CONFIDENTIAL AND PROPRIETARY TO ADVANCED MICRO DEVICES INC.

© 2021 Advanced Micro Devices

This AMD Board schematic and design is the exclusive property of AMD, and is provided only to entities under a non-disclosure agreement with AMD for evaluation purposes. Further distribution or disclosure is strictly prohibited. Use of this schematic and design for any purpose other than evaluation requires a Board Technology License Agreement with AMD. AMD makes no representations or warranties of any kind regarding this schematic and design, including, not limited to, any implied warranty of merchantability or fitness for a particular purpose, and disclaims responsibility for any consequences resulting from use of the information included herein.

TITLE: **VCK190/VMK180**

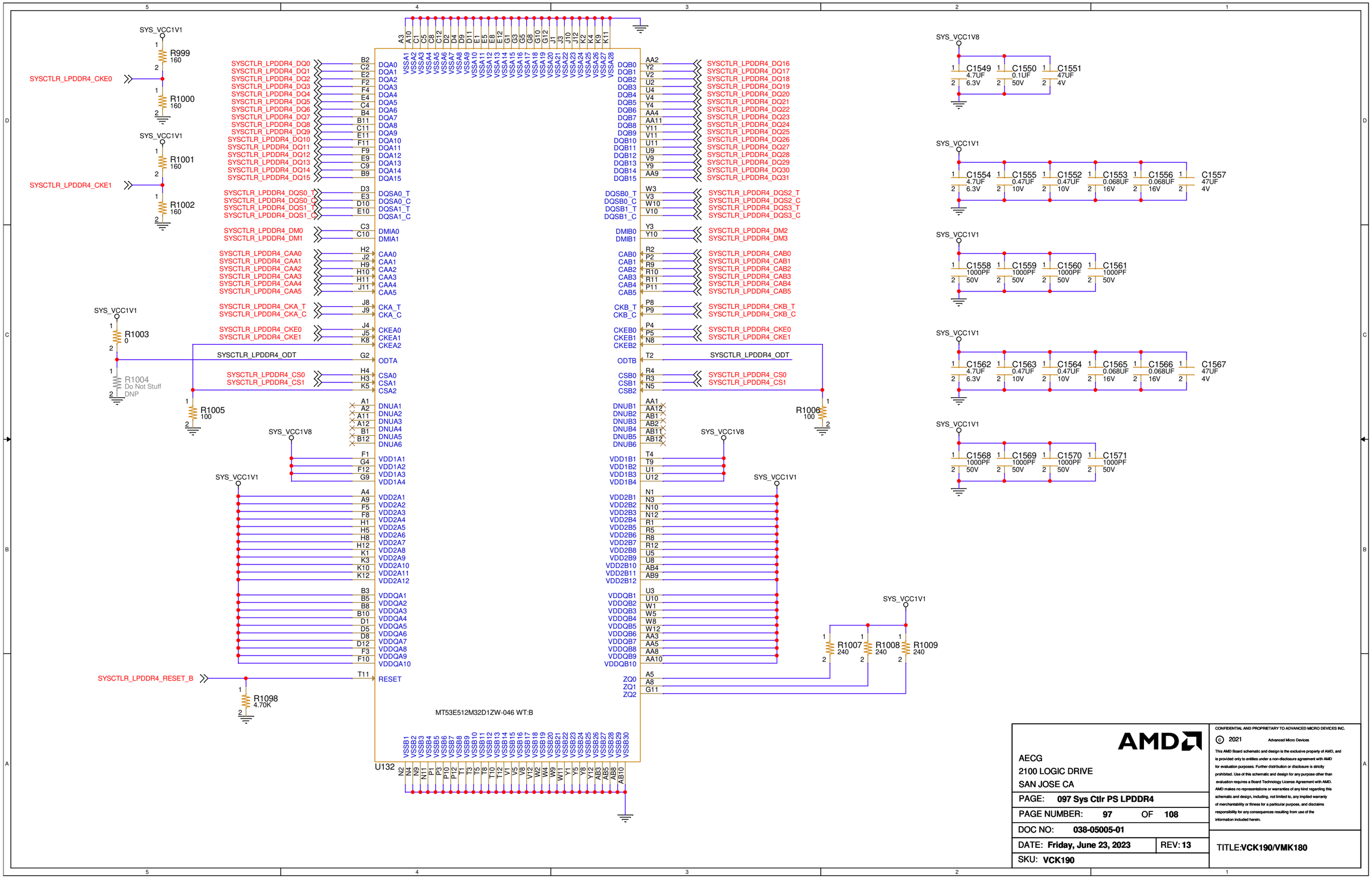

AECG
2100 LOGIC DRIVE
SAN JOSE CA

PAGE:	097 Sys Ctlr PS LPDDR4
PAGE NUMBER:	97 OF 108
DOC NO:	038-05005-01
DATE: Friday, June 23, 2023	REV: 13
SKU: VCK190	

CONFIDENTIAL AND PROPRIETARY TO ADVANCED MICRO DEVICES INC.
© 2021 Advanced Micro Devices
This AMD Board schematic and design is the exclusive property of AMD, and is provided only to entities under a non-disclosure agreement with AMD for evaluation purposes. Further distribution or disclosure is strictly prohibited. Use of this schematic and design for any purpose other than evaluation requires a Board Technology License Agreement with AMD. AMD makes no representations or warranties of any kind regarding this schematic and design, including, not limited to, any implied warranty of merchantability or fitness for a particular purpose, and disclaims responsibility for any consequences resulting from use of the information included herein.

TITLE: VCK190/VMK180

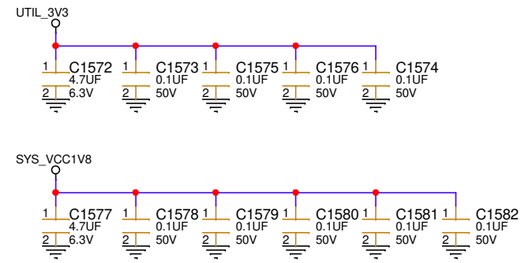

AECG
2100 LOGIC DRIVE
SAN JOSE CA

PAGE: **098 Sys Ctlr Caps**

PAGE NUMBER: **98** OF **108**

DOC NO: **038-05005-01**

DATE: **Friday, June 23, 2023** REV: **13**

SKU: **VCK190**

CONFIDENTIAL AND PROPRIETARY TO ADVANCED MICRO DEVICES INC.

© 2021 Advanced Micro Devices

This AMD Board schematic and design is the exclusive property of AMD, and is provided only to entities under a non-disclosure agreement with AMD for evaluation purposes. Further distribution or disclosure is strictly prohibited. Use of this schematic and design for any purpose other than evaluation requires a Board Technology License Agreement with AMD. AMD makes no representations or warranties of any kind regarding this schematic and design, including, not limited to, any implied warranty of merchantability or fitness for a particular purpose, and disclaims responsibility for any consequences resulting from use of the information included herein.

TITLE:**VCK190/VMK180**

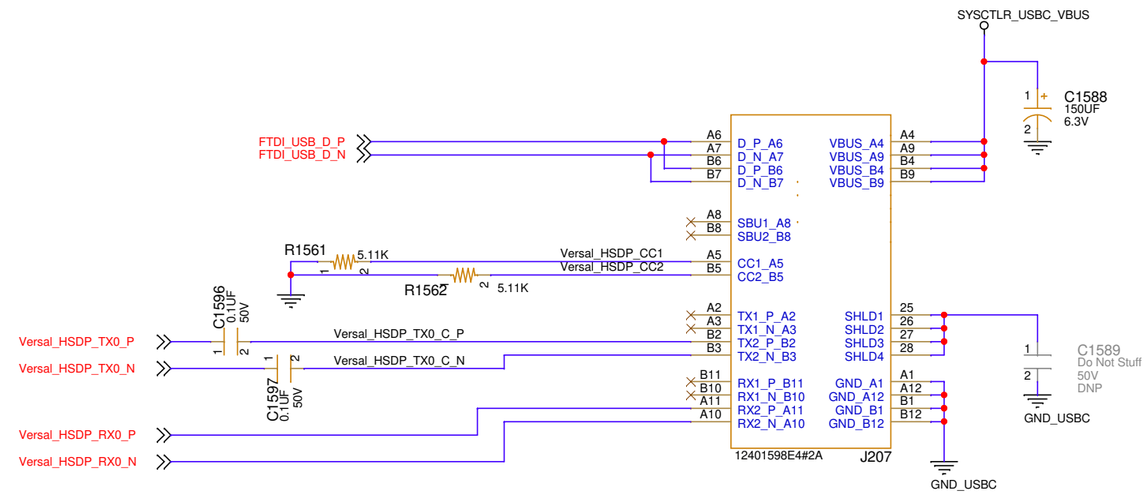

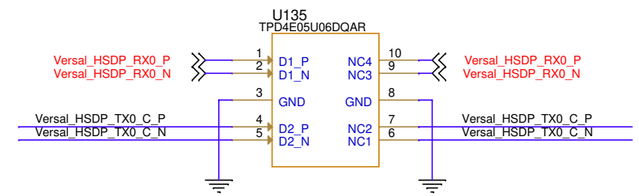

AMD

AECG
2100 LOGIC DRIVE
SAN JOSE CA

PAGE:	099 Sys Ctlr USB-C Downstream
PAGE NUMBER:	99 OF 108
DOC NO:	038-05005-01
DATE: Friday, June 23, 2023	REV: 13
SKU: VCK190	

CONFIDENTIAL AND PROPRIETARY TO ADVANCED MICRO DEVICES INC.
© 2021 Advanced Micro Devices
This AMD Board schematic and design is the exclusive property of AMD, and is provided only to entities under a non-disclosure agreement with AMD for evaluation purposes. Further distribution or disclosure is strictly prohibited. Use of this schematic and design for any purpose other than evaluation requires a Board Technology License Agreement with AMD. AMD makes no representations or warranties of any kind regarding this schematic and design, including, not limited to, any implied warranty of merchantability or fitness for a particular purpose, and disclaims responsibility for any consequences resulting from use of the information included herein.

TITLE: VCK190/VMK180

AECG
2100 LOGIC DRIVE
SAN JOSE CA

PAGE: **100 Blank**

PAGE NUMBER: **100** OF **108**

DOC NO: **038-05005-01**

DATE: **Friday, June 23, 2023** REV: **13**

SKU: **VCK190**

CONFIDENTIAL AND PROPRIETARY TO ADVANCED MICRO DEVICES INC.

© 2021 Advanced Micro Devices

This AMD Board schematic and design is the exclusive property of AMD, and is provided only to entities under a non-disclosure agreement with AMD for evaluation purposes. Further distribution or disclosure is strictly prohibited. Use of this schematic and design for any purpose other than evaluation requires a Board Technology License Agreement with AMD. AMD makes no representations or warranties of any kind regarding this schematic and design, including, not limited to, any implied warranty of merchantability or fitness for a particular purpose, and disclaims responsibility for any consequences resulting from use of the information included herein.

TITLE:**VCK190/VMK180**

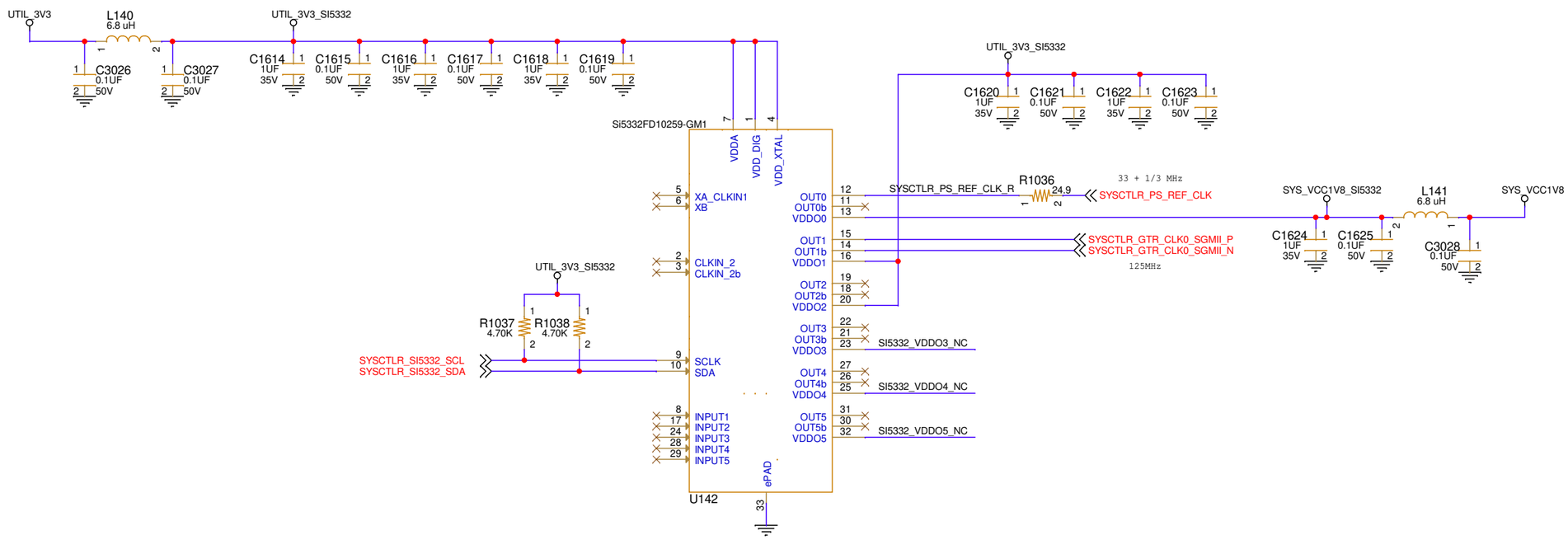

AECG
2100 LOGIC DRIVE
SAN JOSE CA

PAGE: **101 Sys Ctlr Clocks**

PAGE NUMBER: **101** OF **108**

DOC NO: **038-05005-01**

DATE: **Friday, June 23, 2023** REV: **13**

SKU: **VCK190**

CONFIDENTIAL AND PROPRIETARY TO ADVANCED MICRO DEVICES INC.

© 2021 Advanced Micro Devices

This AMD Board schematic and design is the exclusive property of AMD, and is provided only to entities under a non-disclosure agreement with AMD for evaluation purposes. Further distribution or disclosure is strictly prohibited. Use of this schematic and design for any purpose other than evaluation requires a Board Technology License Agreement with AMD. AMD makes no representations or warranties of any kind regarding this schematic and design, including, not limited to, any implied warranty of merchantability or fitness for a particular purpose, and disclaims responsibility for any consequences resulting from use of the information included herein.

TITLE: **VCK190/VMK180**

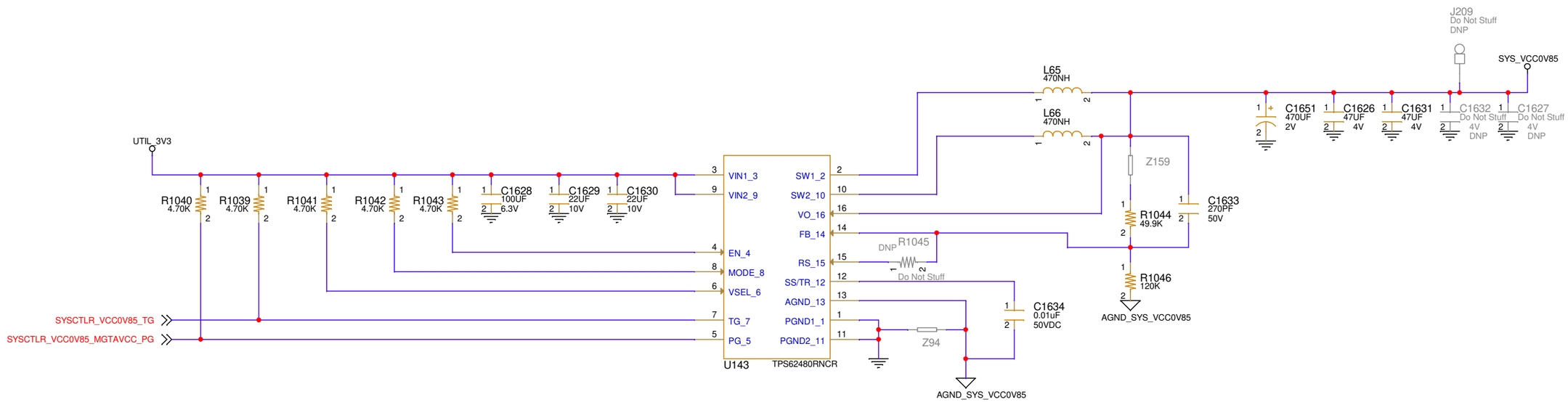

AECG
2100 LOGIC DRIVE
SAN JOSE CA

PAGE:	**102 SYS_VCC0V85 Regulator**
PAGE NUMBER:	**102** OF **108**
DOC NO:	**038-05005-01**
DATE: **Friday, June 23, 2023**	REV: **13**
SKU: **VCK190**	

CONFIDENTIAL AND PROPRIETARY TO ADVANCED MICRO DEVICES INC.
© 2021 Advanced Micro Devices
This AMD Board schematic and design is the exclusive property of AMD, and is provided only to entities under a non-disclosure agreement with AMD for evaluation purposes. Further distribution or disclosure is strictly prohibited. Use of this schematic and design for any purpose other than evaluation requires a Board Technology License Agreement with AMD. AMD makes no representations or warranties of any kind regarding this schematic and design, including, not limited to, any implied warranty of merchantability or fitness for a particular purpose, and disclaims responsibility for any consequences resulting from use of the information included herein.

TITLE: **VCK190/VMK180**

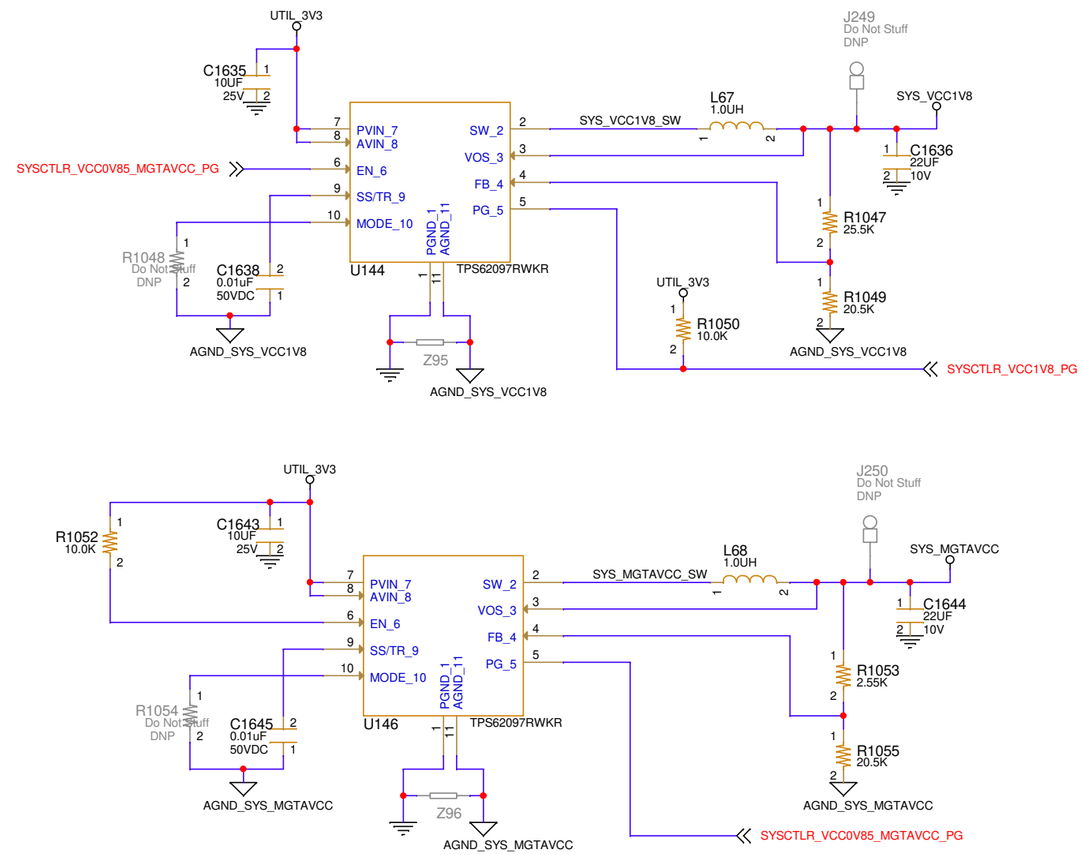

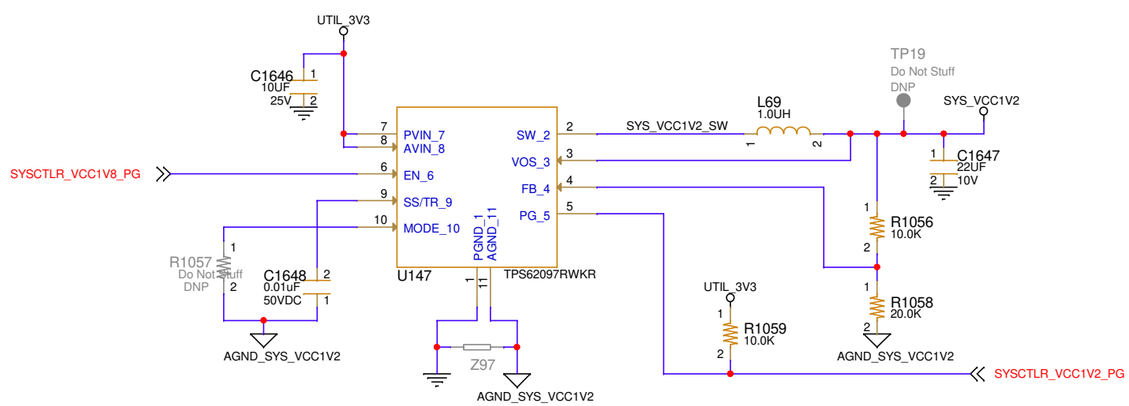

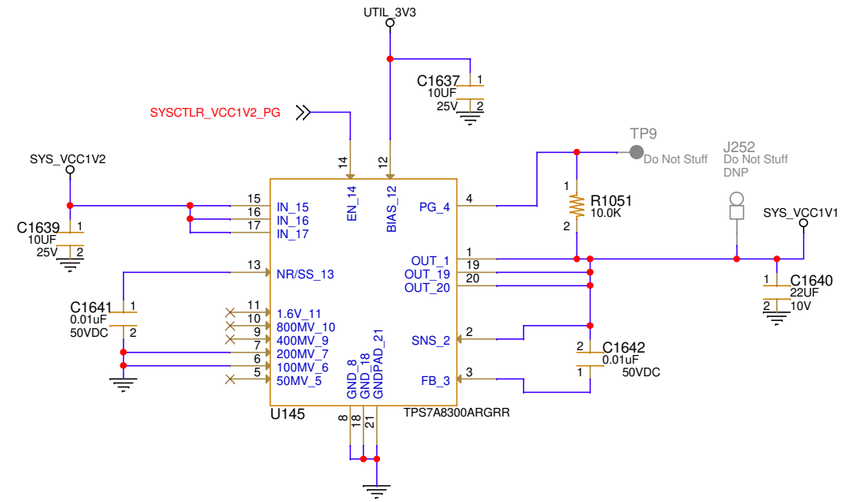

AMD

AECG
2100 LOGIC DRIVE
SAN JOSE CA

PAGE:	103 Sys Ctlr 1.8, 1.2, 1.1, 0.9
PAGE NUMBER:	103 OF 108
DOC NO:	038-05005-01
DATE: Friday, June 23, 2023	REV: 13
SKU: VCK190	

CONFIDENTIAL AND PROPRIETARY TO ADVANCED MICRO DEVICES INC.
© 2021 Advanced Micro Devices
This AMD Board schematic and design is the exclusive property of AMD, and is provided only to entities under a non-disclosure agreement with AMD for evaluation purposes. Further distribution or disclosure is strictly prohibited. Use of this schematic and design for any purpose other than evaluation requires a Board Technology License Agreement with AMD. AMD makes no representations or warranties of any kind regarding this schematic and design, including, not limited to, any implied warranty of merchantability or fitness for a particular purpose, and disclaims responsibility for any consequences resulting from use of the information included herein.

TITLE: VCK190/VMK180

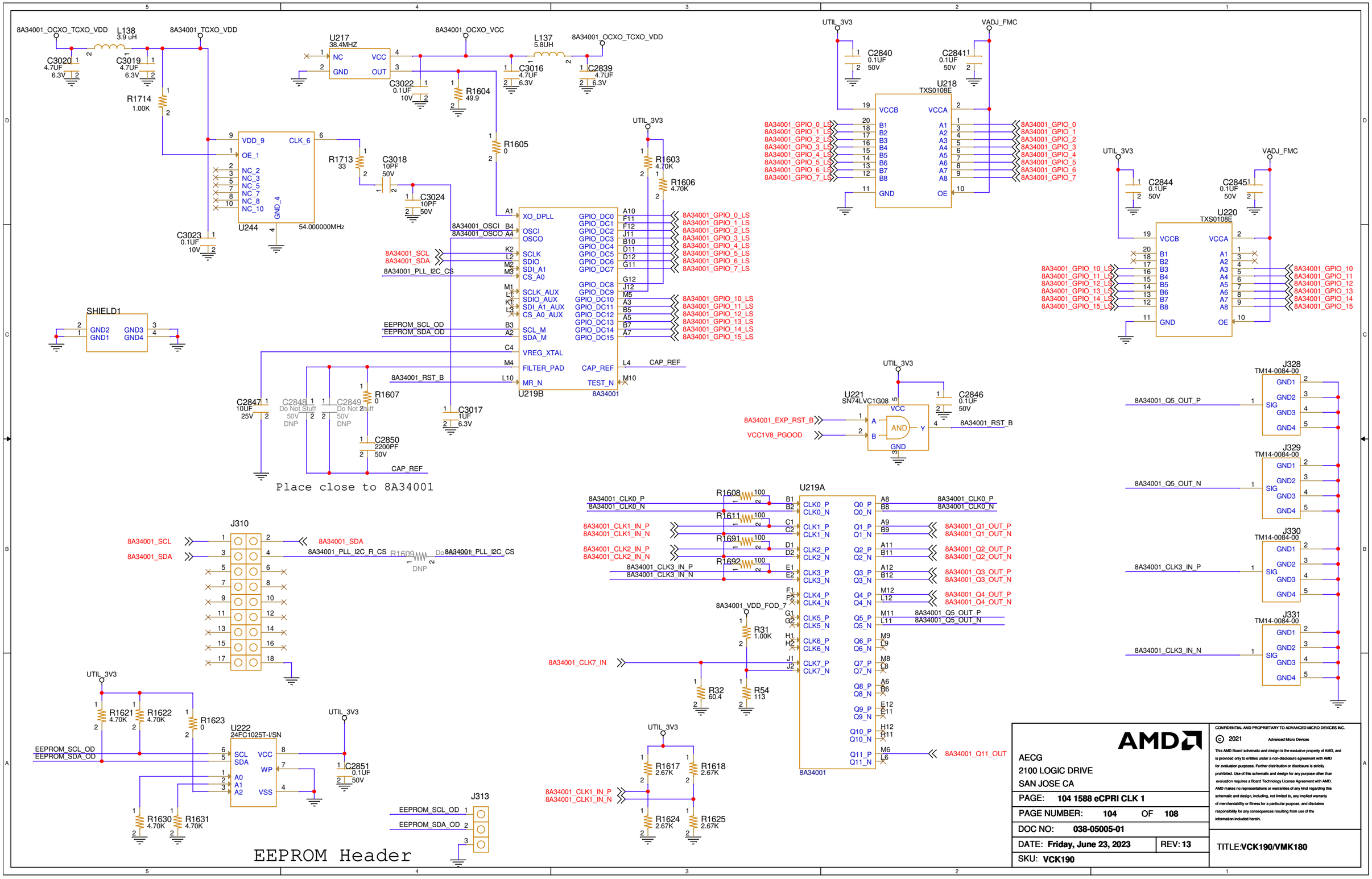
8A34001_OCXO_TCXO_VDD
L138
3.9 uH
8A34001_TCXO_VDD
C3020
4.7UF
6.3V
C3019
4.7UF
6.3V
R1714
1.00K
U217
38.4MHZ
NC
VCC
GND
OUT
8A34001_OCXO_VCC
L137
5.8UH
8A34001_OCXO_TCXO_VDD
C3016
4.7UF
6.3V
C2839
4.7UF
6.3V
C3022
0.1UF
10V
R1604
49.9
R1605
0
VDD_9
CLK_6
OE_1
NC_2
NC_3
NC_5
NC_7
NC_8
NC_10
GND_4
U244
54.000000MHz
C3023
0.1UF
10V
R1713
33
C3018
10PF
50V
C3024
10PF
50V
UTIL_3V3
R1603
4.70K
R1606
4.70K
8A34001_OSCI
8A34001_OSCO
8A34001_SCL
8A34001_SDA
8A34001_PLL_I2C_CS
EEPROM_SCL_OD
EEPROM_SDA_OD
8A34001_RST_B
XO_DPLL
OSCI
OSCO
SCLK
SDIO
SDI_A1
CS_A0
SCLK_AUX
SDIO_AUX
SDI_A1_AUX
CS_A0_AUX
SCL_M
SDA_M
VREG_XTAL
FILTER_PAD
MR_N
GPIO_DC0
GPIO_DC1
GPIO_DC2
GPIO_DC3
GPIO_DC4
GPIO_DC5
GPIO_DC6
GPIO_DC7
GPIO_DC8
GPIO_DC9
GPIO_DC10
GPIO_DC11
GPIO_DC12
GPIO_DC13
GPIO_DC14
GPIO_DC15
CAP_REF
TEST_N
U219B
8A34001
8A34001_GPIO_0_LS
8A34001_GPIO_1_LS
8A34001_GPIO_2_LS
8A34001_GPIO_3_LS
8A34001_GPIO_4_LS
8A34001_GPIO_5_LS
8A34001_GPIO_6_LS
8A34001_GPIO_7_LS
8A34001_GPIO_10_LS
8A34001_GPIO_11_LS
8A34001_GPIO_12_LS
8A34001_GPIO_13_LS
8A34001_GPIO_14_LS
8A34001_GPIO_15_LS
SHIELD1
GND2
GND1
GND3
GND4
C2847
10UF
25V
C2848
Do Not Stuff
50V
DNP
C2849
Do Not Stuff
50V
DNP
R1607
0
C2850
2200PF
50V
C3017
1UF
6.3V
Place close to 8A34001
UTIL_3V3
C2840
0.1UF
50V
VADJ_FMC
C2841
0.1UF
50V
U218
TXS0108E
VCCB
VCCA
GND
OE
8A34001_GPIO_0_LS
8A34001_GPIO_1_LS
8A34001_GPIO_2_LS
8A34001_GPIO_3_LS
8A34001_GPIO_4_LS
8A34001_GPIO_5_LS
8A34001_GPIO_6_LS
8A34001_GPIO_7_LS
8A34001_GPIO_0
8A34001_GPIO_1
8A34001_GPIO_2
8A34001_GPIO_3
8A34001_GPIO_4
8A34001_GPIO_5
8A34001_GPIO_6
8A34001_GPIO_7
C2844
0.1UF
50V
C2845
0.1UF
50V
U220
TXS0108E
8A34001_GPIO_10_LS
8A34001_GPIO_11_LS
8A34001_GPIO_12_LS
8A34001_GPIO_13_LS
8A34001_GPIO_14_LS
8A34001_GPIO_15_LS
8A34001_GPIO_10
8A34001_GPIO_11
8A34001_GPIO_12
8A34001_GPIO_13
8A34001_GPIO_14
8A34001_GPIO_15
U221
SN74LVC1G08
VCC
AND
GND
8A34001_EXP_RST_B
VCC1V8_PGOOD
C2846
0.1UF
50V
8A34001_RST_B
J328
TM14-0084-00
8A34001_Q5_OUT_P
J329
TM14-0084-00
8A34001_Q5_OUT_N
J330
TM14-0084-00
8A34001_CLK3_IN_P
J331
TM14-0084-00
8A34001_CLK3_IN_N
GND1
GND2
SIG
GND3
GND4
J310
8A34001_SCL
8A34001_SDA
8A34001_PLL_I2C_R_CS
R1609
DNP
8A34001_PLL_I2C_CS
U219A
R1608
100
R1611
100
R1691
100
R1692
100
8A34001_CLK0_P
8A34001_CLK0_N
8A34001_CLK1_IN_P
8A34001_CLK1_IN_N
8A34001_CLK2_IN_P
8A34001_CLK2_IN_N
8A34001_CLK3_IN_P
8A34001_CLK3_IN_N
8A34001_VDD_FOD_7
R31
1.00K
8A34001_CLK7_IN
R32
60.4
R54
113
CLK0_P
CLK0_N
CLK1_P
CLK1_N
CLK2_P
CLK2_N
CLK3_P
CLK3_N
CLK4_P
CLK4_N
CLK5_P
CLK5_N
CLK6_P
CLK6_N
CLK7_P
CLK7_N
Q0_P
Q0_N
Q1_P
Q1_N
Q2_P
Q2_N
Q3_P
Q3_N
Q4_P
Q4_N
Q5_P
Q5_N
Q6_P
Q6_N
Q7_P
Q7_N
Q8_P
Q8_N
Q9_P
Q9_N
Q10_P
Q10_N
Q11_P
Q11_N
8A34001_Q1_OUT_P
8A34001_Q1_OUT_N
8A34001_Q2_OUT_P
8A34001_Q2_OUT_N
8A34001_Q3_OUT_P
8A34001_Q3_OUT_N
8A34001_Q4_OUT_P
8A34001_Q4_OUT_N
8A34001_Q5_OUT_P
8A34001_Q5_OUT_N
8A34001_Q11_OUT
8A34001
R1621
4.70K
R1622
4.70K
R1623
0
U222
24FC1025T-I/SN
SCL
SDA
VCC
WP
A0
A1
A2
VSS
C2851
0.1UF
50V
R1630
4.70K
R1631
4.70K
J313
EEPROM Header
R1617
2.67K
R1618
2.67K
R1624
2.67K
R1625
2.67K
AMD
AECG
2100 LOGIC DRIVE
SAN JOSE CA
PAGE: 104 1588 eCPRI CLK 1
PAGE NUMBER: 104 OF 108
DOC NO: 038-05005-01
DATE: Friday, June 23, 2023
REV: 13
SKU: VCK190
TITLE: VCK190/VMK180
CONFIDENTIAL AND PROPRIETARY TO ADVANCED MICRO DEVICES INC.
© 2021 Advanced Micro Devices
This AMD Board schematic and design is the exclusive property of AMD, and is provided only to entities under a non-disclosure agreement with AMD for evaluation purposes. Further distribution or disclosure is strictly prohibited. Use of this schematic and design for any purpose other than evaluation requires a Board Technology License Agreement with AMD. AMD makes no representations or warranties of any kind regarding this schematic and design, including, not limited to, any implied warranty of merchantability or fitness for a particular purpose, and disclaims responsibility for any consequences resulting from use of the information included herein.

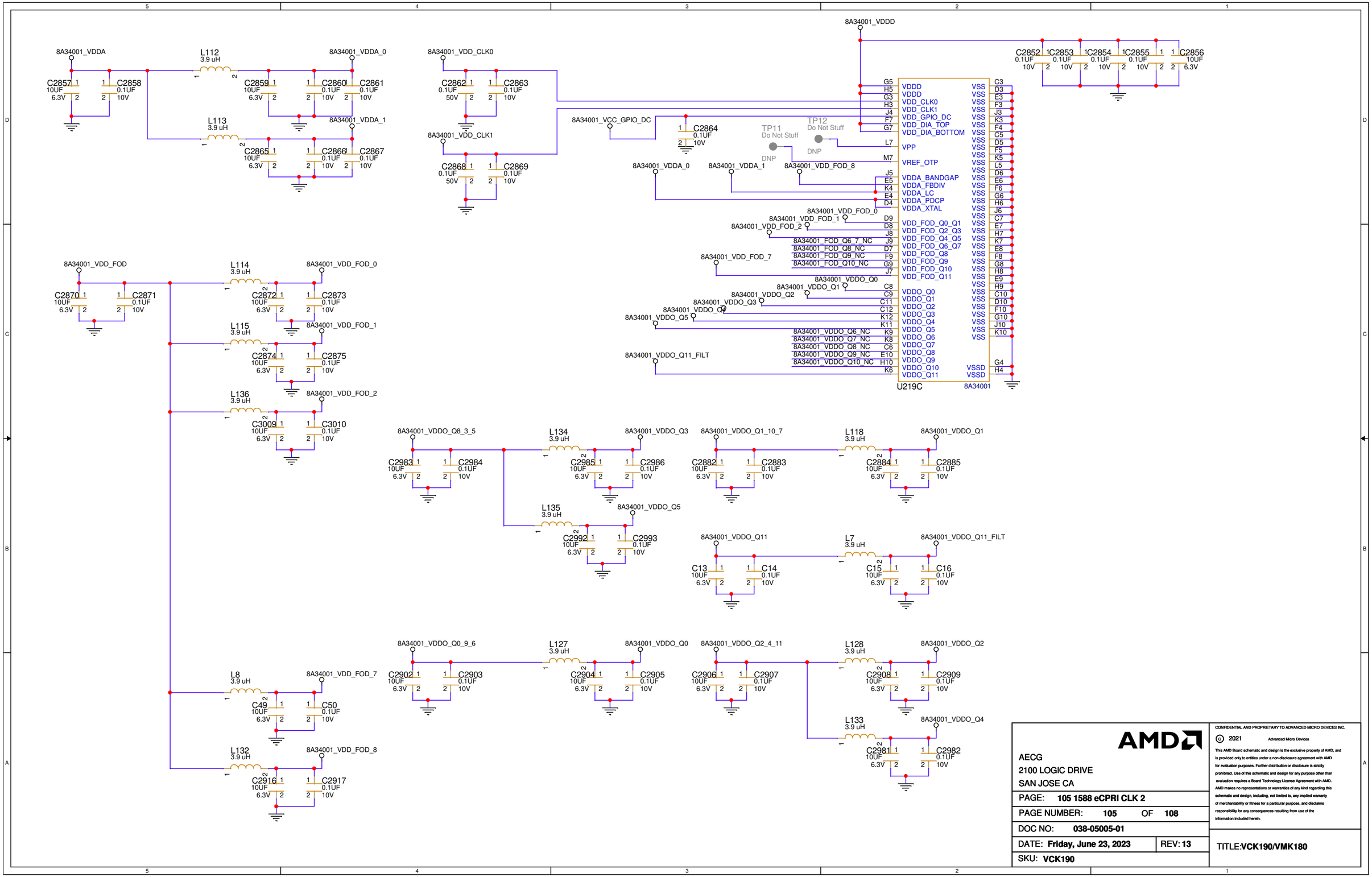

AECG
2100 LOGIC DRIVE
SAN JOSE CA

PAGE: **105 1588 eCPRI CLK 2**

PAGE NUMBER: **105** OF **108**

DOC NO: **038-05005-01**

DATE: **Friday, June 23, 2023** REV: **13**

SKU: **VCK190**

CONFIDENTIAL AND PROPRIETARY TO ADVANCED MICRO DEVICES INC.

© 2021 Advanced Micro Devices

This AMD Board schematic and design is the exclusive property of AMD, and is provided only to entities under a non-disclosure agreement with AMD for evaluation purposes. Further distribution or disclosure is strictly prohibited. Use of this schematic and design for any purpose other than evaluation requires a Board Technology License Agreement with AMD. AMD makes no representations or warranties of any kind regarding this schematic and design, including, not limited to, any implied warranty of merchantability or fitness for a particular purpose, and disclaims responsibility for any consequences resulting from use of the information included herein.

TITLE: **VCK190/VMK180**

3.3V LDOs

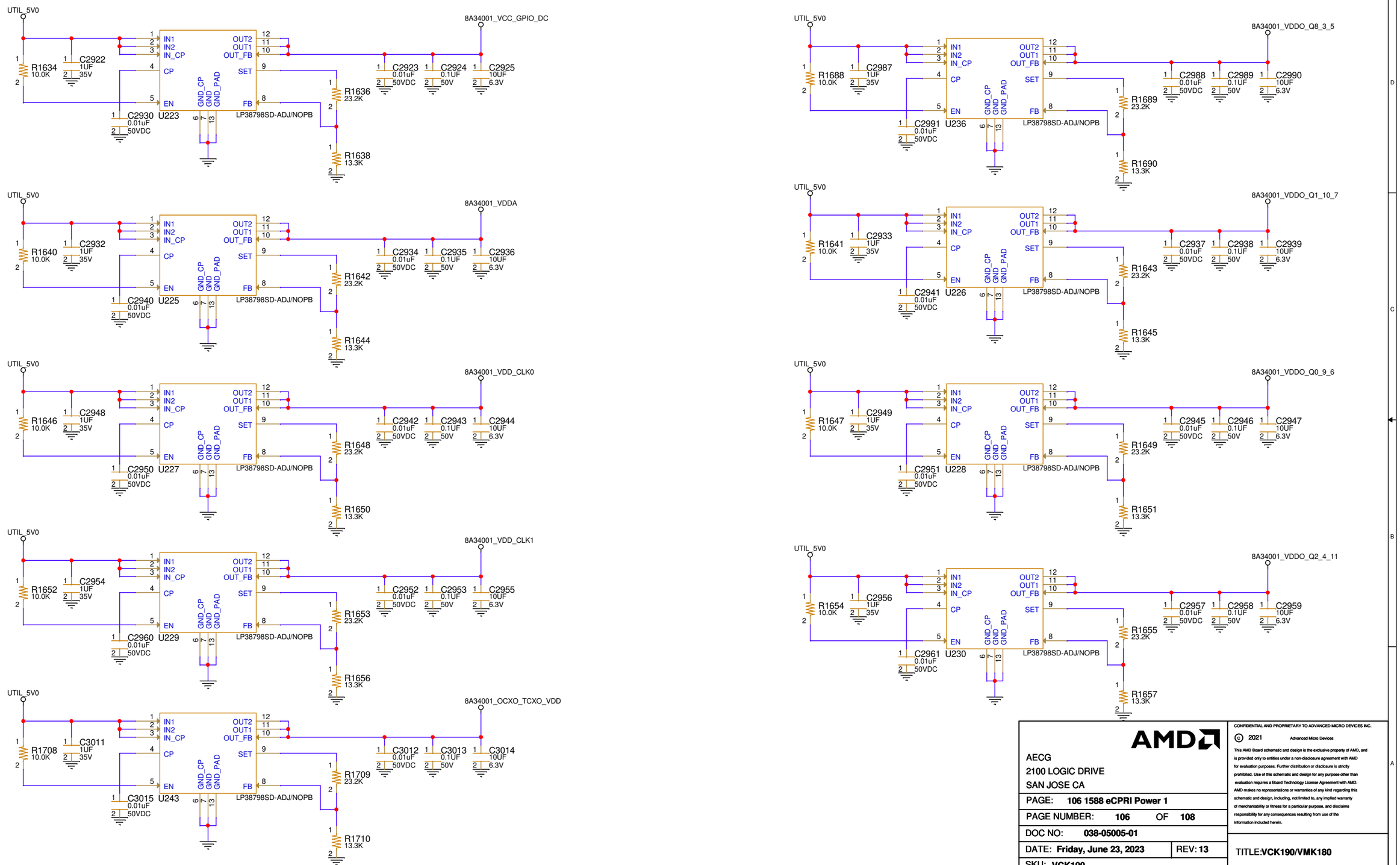

AECG
2100 LOGIC DRIVE
SAN JOSE CA

PAGE:	106 1588 eCPRI Power 1
PAGE NUMBER:	106 OF 108
DOC NO:	038-05005-01
DATE: Friday, June 23, 2023	REV: 13
SKU: VCK190	

CONFIDENTIAL AND PROPRIETARY TO ADVANCED MICRO DEVICES INC.
© 2021 Advanced Micro Devices
This AMD Board schematic and design is the exclusive property of AMD, and is provided only to entities under a non-disclosure agreement with AMD for evaluation purposes. Further distribution or disclosure is strictly prohibited. Use of this schematic and design for any purpose other than evaluation requires a Board Technology License Agreement with AMD. AMD makes no representations or warranties of any kind regarding this schematic and design, including, not limited to, any implied warranty of merchantability or fitness for a particular purpose, and disclaims responsibility for any consequences resulting from use of the information included herein.

TITLE: VCK190/VMK180

1.8V LDOs

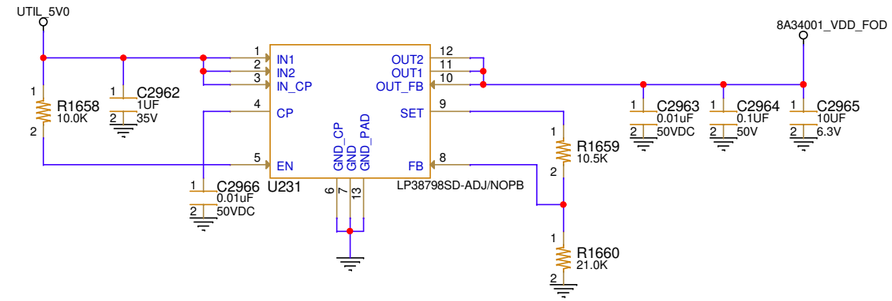

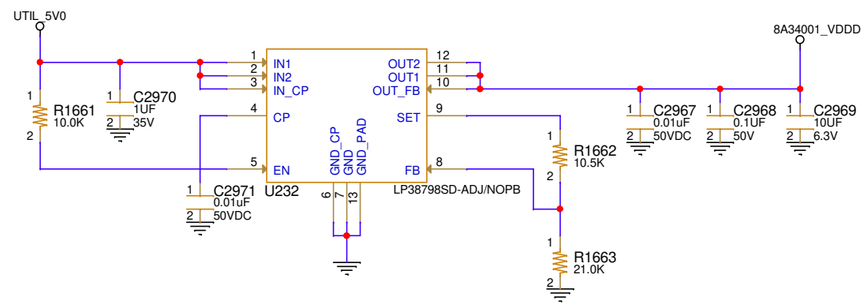

1.5V LDO

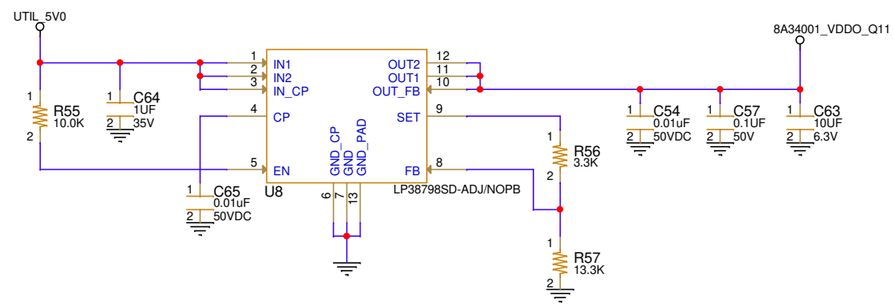

AECG
2100 LOGIC DRIVE
SAN JOSE CA

PAGE:	107 1588 eCPRI Power 2
PAGE NUMBER:	107 OF 108
DOC NO:	038-05005-01
DATE: Friday, June 23, 2023	REV: 13
SKU: VCK190	

CONFIDENTIAL AND PROPRIETARY TO ADVANCED MICRO DEVICES INC.
© 2021 Advanced Micro Devices
This AMD Board schematic and design is the exclusive property of AMD, and is provided only to entities under a non-disclosure agreement with AMD for evaluation purposes. Further distribution or disclosure is strictly prohibited. Use of this schematic and design for any purpose other than evaluation requires a Board Technology License Agreement with AMD. AMD makes no representations or warranties of any kind regarding this schematic and design, including, not limited to, any implied warranty of merchantability or fitness for a particular purpose, and disclaims responsibility for any consequences resulting from use of the information included herein.

TITLE: VCK190/VMK180

AECG
2100 LOGIC DRIVE
SAN JOSE CA

PAGE: **108 BLANK**

PAGE NUMBER: **108** OF **108**

DOC NO: **038-05005-01**

DATE: **Friday, June 23, 2023** REV: **13**

SKU: **VCK190**

CONFIDENTIAL AND PROPRIETARY TO ADVANCED MICRO DEVICES INC.

© 2021 Advanced Micro Devices

This AMD Board schematic and design is the exclusive property of AMD, and is provided only to entities under a non-disclosure agreement with AMD for evaluation purposes. Further distribution or disclosure is strictly prohibited. Use of this schematic and design for any purpose other than evaluation requires a Board Technology License Agreement with AMD. AMD makes no representations or warranties of any kind regarding this schematic and design, including, not limited to, any implied warranty of merchantability or fitness for a particular purpose, and disclaims responsibility for any consequences resulting from use of the information included herein.

TITLE:**VCK190/VMK180**