Heart Disease Detection using ECG

Abdul Wasay & Ali Raza & M. Ali Athar

PIEAS

December 2024

Introduction

- Objective: Design a working ECG sensor
- Motivation: Prediction of basic heart related diseases
- Softwares: MATLAB, LabVIEW

Introduction

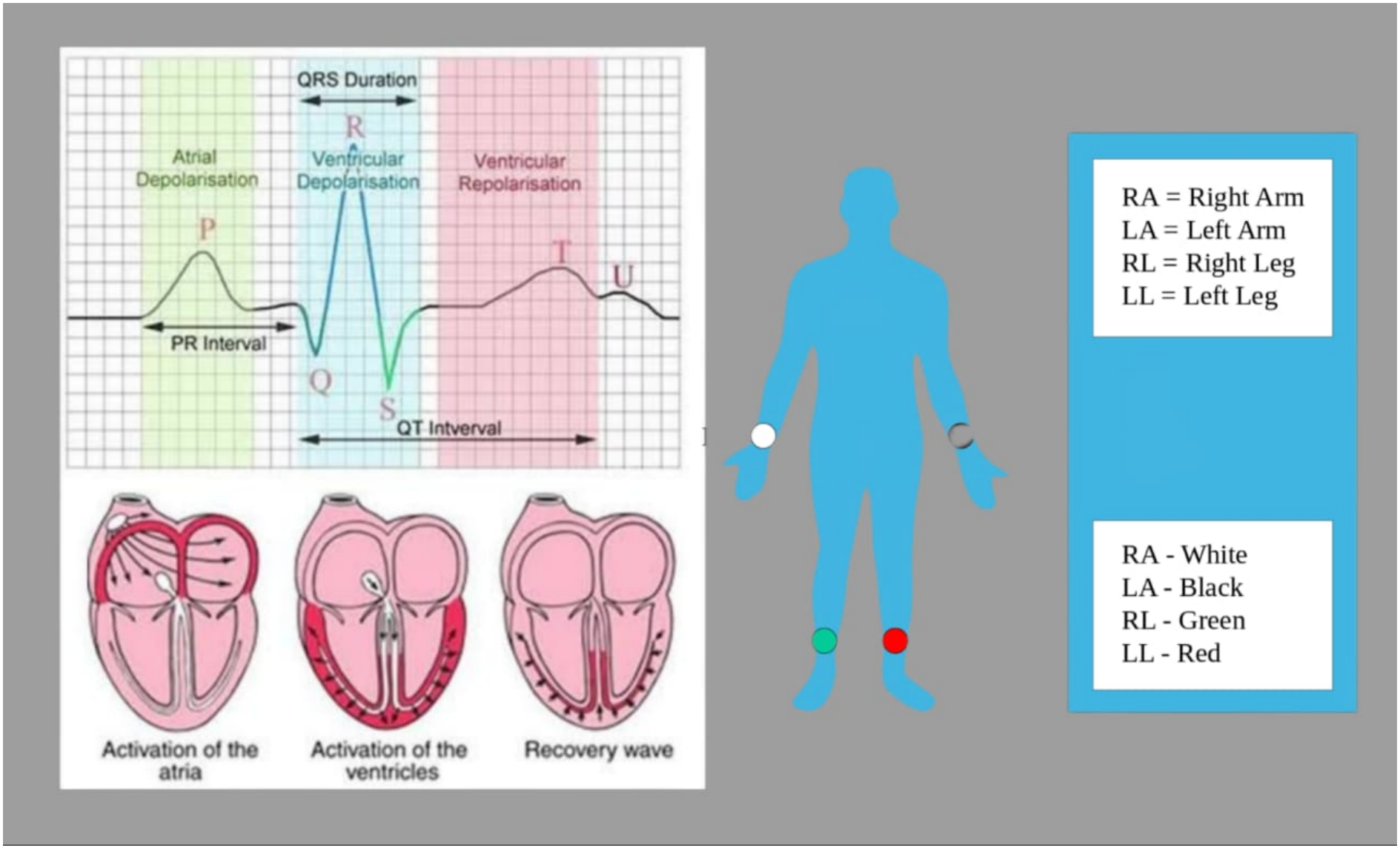

Figure: ECG Basic Diagram

Circuit Diagram

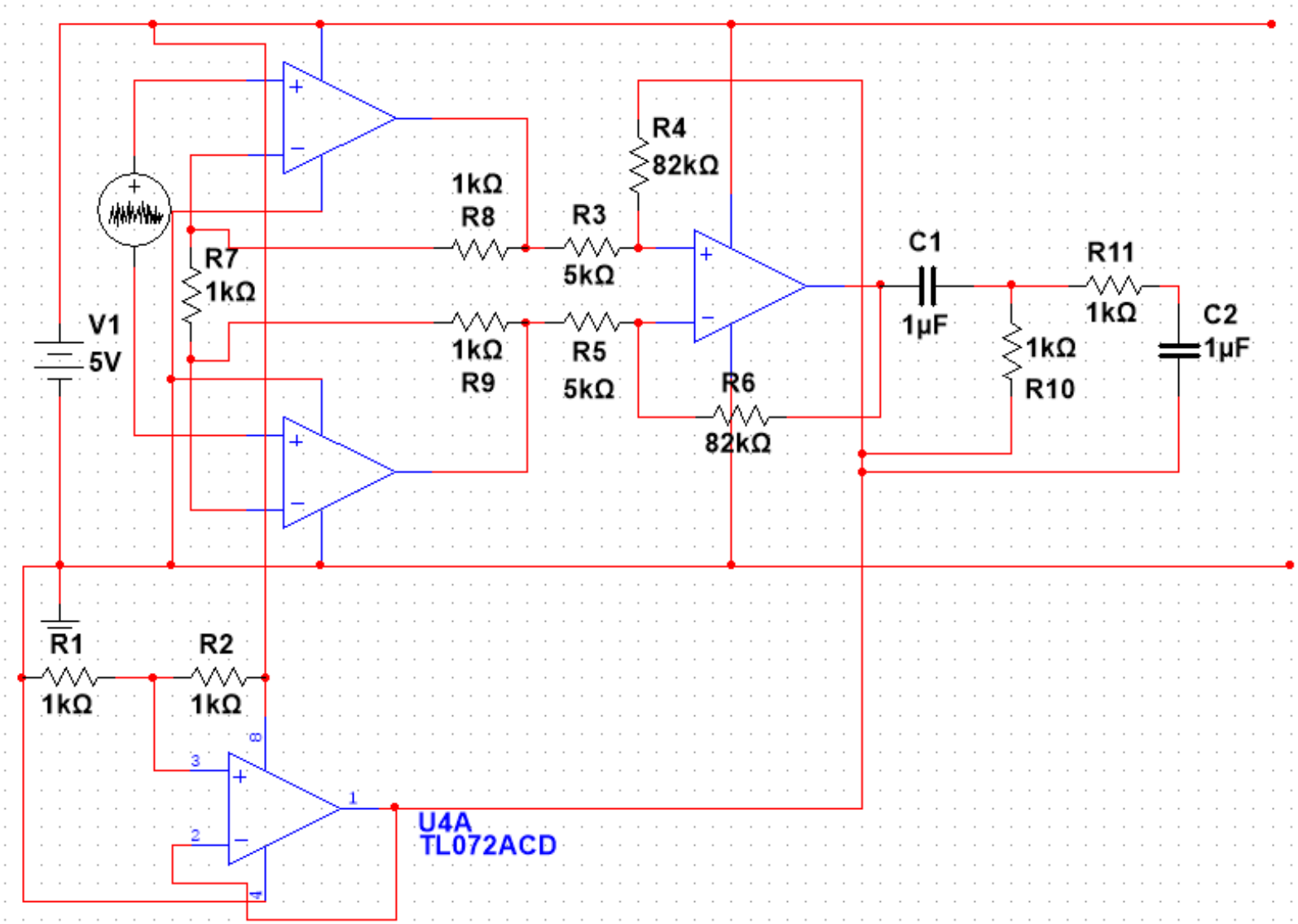

Figure: Main Circuit over view

Circuit Diagram

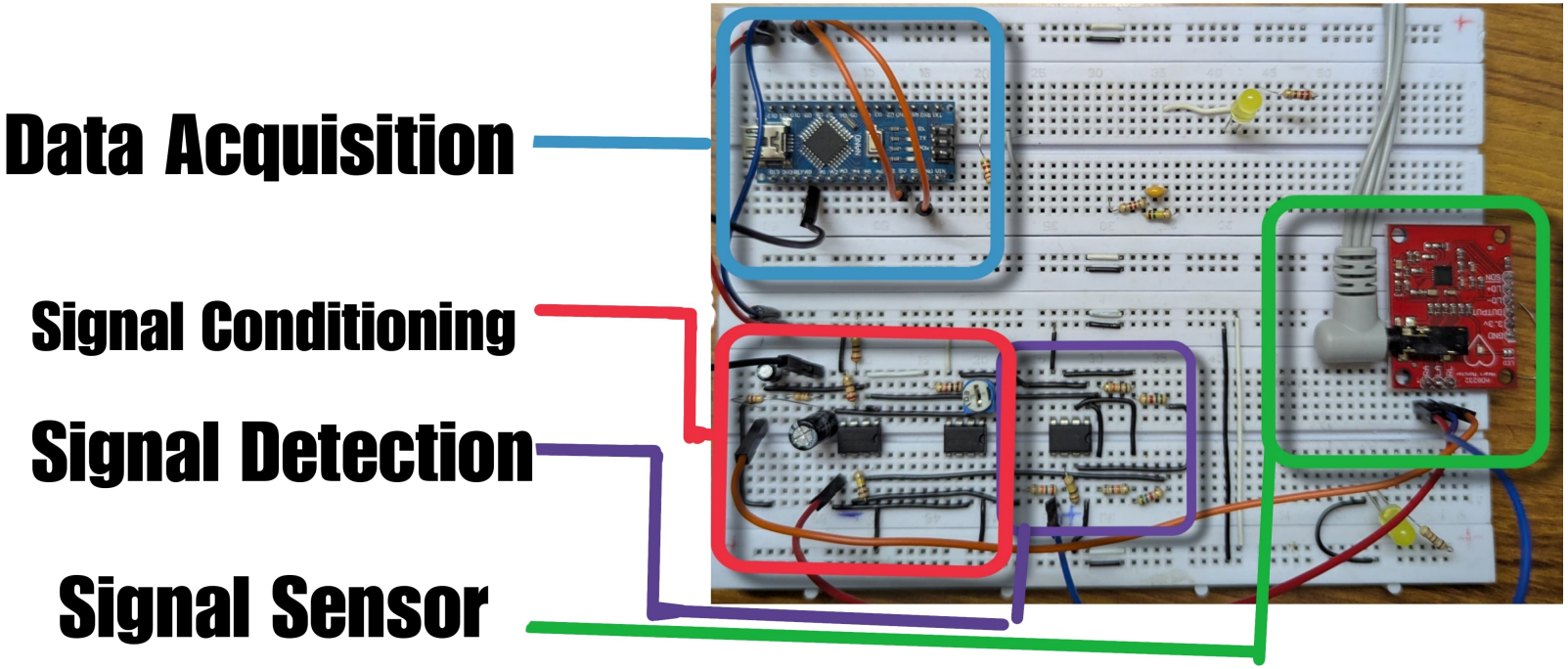

Circuit Diagram

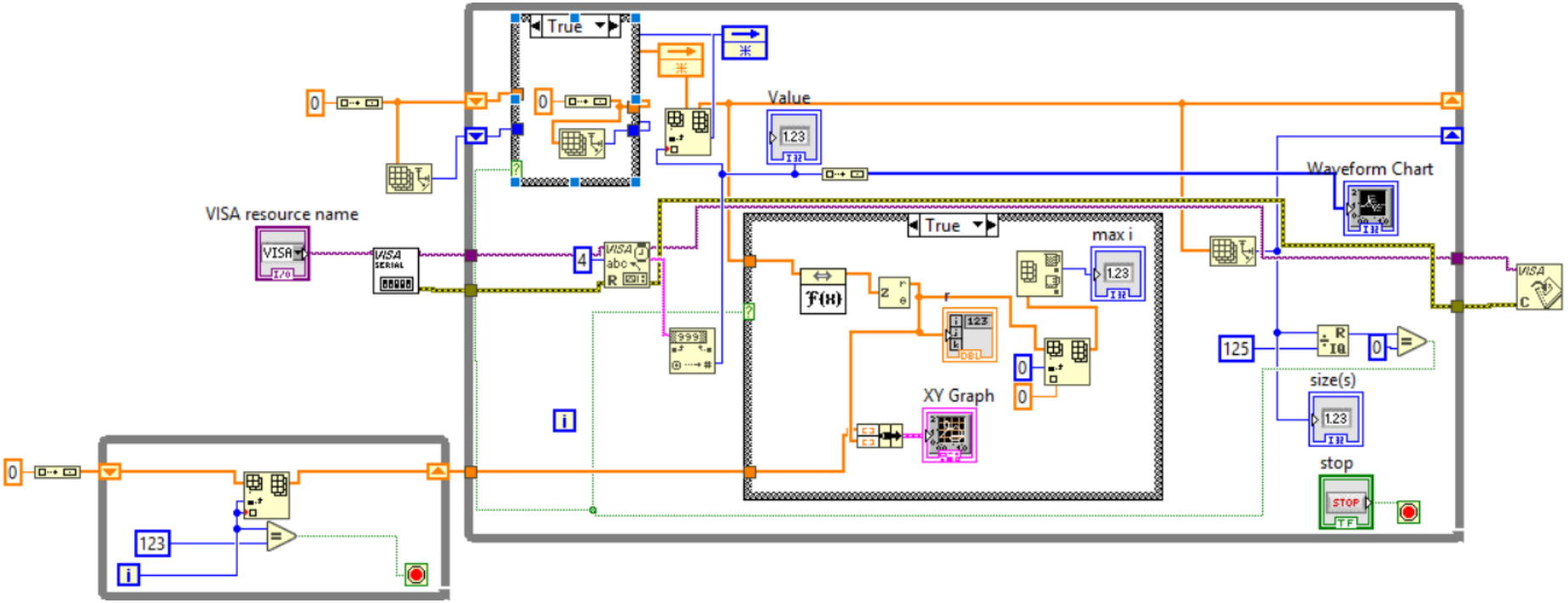

Figure: Labview Design

Implementation

- Sensing the Signal using silver Electrodes
- Steps:
  - Detect the signal using instrumentation Amplifier
  - Acquire the data using serial port
  - Transmit the data to a pre-trained model, to detect the anomalies
- Waveform and FFT of the real-time signal, in LabVIEW

Results

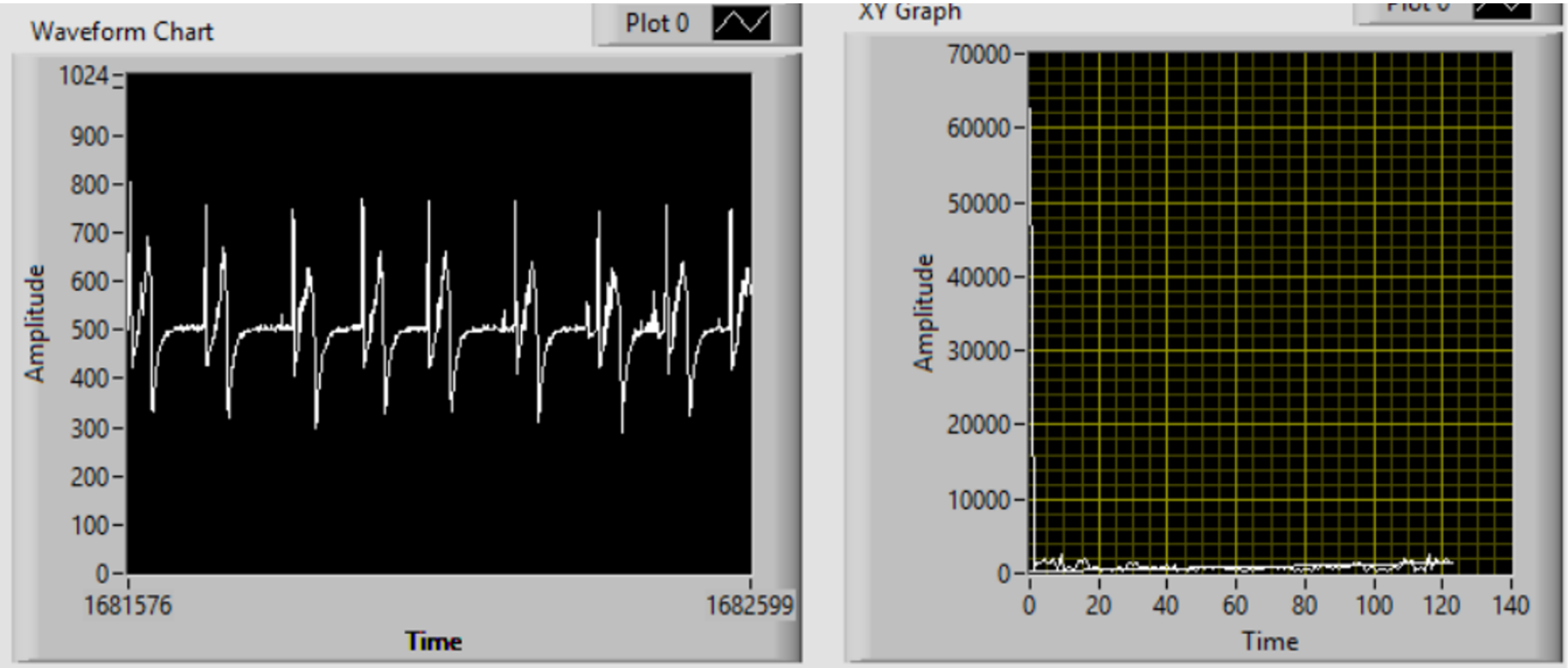

Figure: ECG output waveform

Circuit Diagram

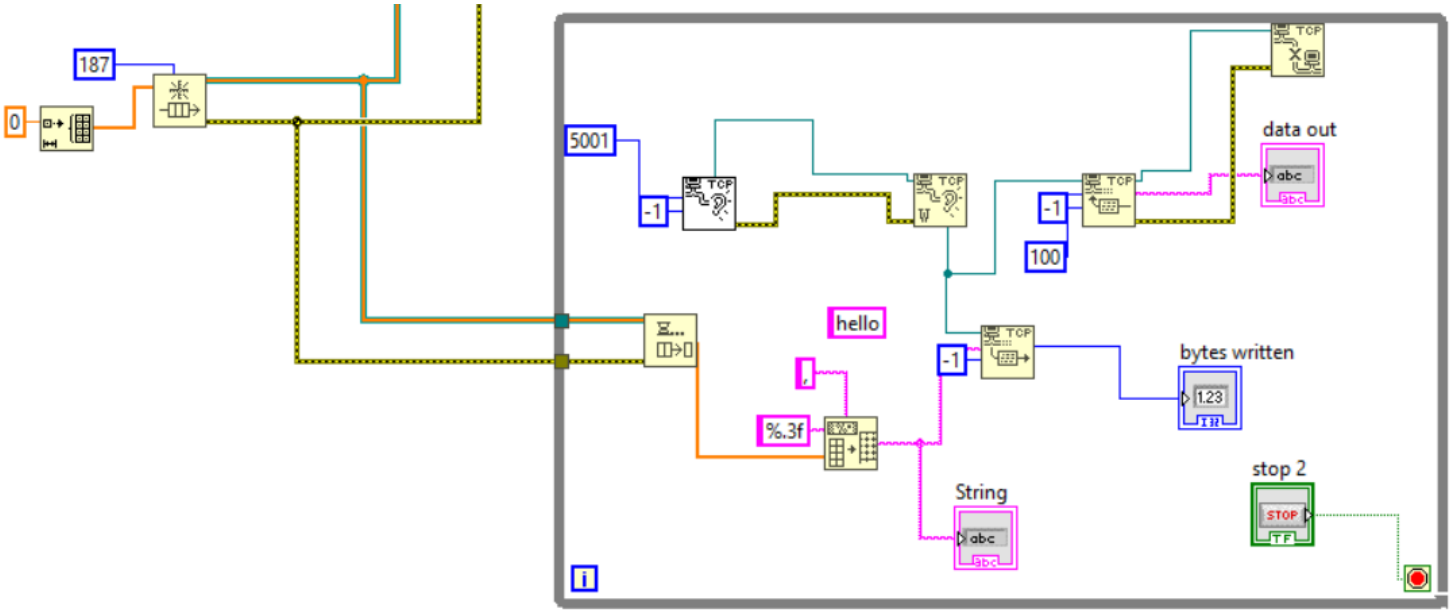

Figure: TCP/IP Communication with MATLAB

Implementation

- Sending Data over to Matlab via TCP Communication
- Recieving and further processing the data to be sent into trained ECG Classification model
- The ECG data is classified into 5 classes
  - Normal beats
  - Supraventricular Ectopic beats
  - Ventricular beats
  - Fusion beats
  - Unknown beats

Results

```
Connection Status: open
Data received: 0.900,0.851,0.577,0.147,0.000,0.114,0.200,0.209,0.316,0.349,


    The predicted class is:      2
```

Figure: Matlab Result

Discussion

- Challenges:
  - Unavailability of equipment
  - Limited potential of Software
  - Ambiguity due to Cheap Build quality
- Solutions:
  - Sending data to another software, and processing on its inteface
  - Build our own Circuits instead of relying on cheap chips

Conclusion

- ECG implementation covers the basics of the measurement block diagram
- The choice of filters is never good. So inst the total gain of the circuit
- Problems not solved: Ambiguity