AN INTERNATIONAL AWARD-WINNING INSTITUTION FOR SUSTAINABILITY

INTERNATIONAL ISLAMIC UNIVERSITY MALAYSIA
GOMBAK, 53100, KUALA LUMPUR, MALAYSIA

KULLIYYAH OF ENGINEERING
SEMESTER 2, 2021/2022

MCTE 4362
SECTION 1
ROBOTICS HARDWARE SYSTEM

PROJECT

VERSATILE ANIMAL INSPIRED SERVICE ROBOT THAT CAN MOVE REMOTELY AND AUTONOMOUSLY ON (WATER & LAND/ WATER & AIR/ LAND & AIR/ ALL 3)

ANIMAL SELECTION: SPIDER DRONE (LAND & AIR)

LECTURER: ASSOC. PROF. DR. ZULKIFLI BIN ZAINAL ABIDIN
GROUP: A

NO	NAME	MATRIC NO
1	AHMAD FIRDAUS BIN GHAZALI	1814113
2	ABDULALEM ALI ALMAEESH	1714949
3	ABDURRAHMAN BIN KAMARULARIFFIN	1622031

SUBMISSION DATE: 7th JUNE 2022

EXECUTIVE SUMMARY

Problem statement

The windows and facades of taller buildings become more inaccessible to typical cleaners. Although human window washers are enthralled by the spectacle, the labour is extremely hazardous. The Occupational Safety and Health Administration (OSHA) documented 88 window washing accidents in New York City over a 15-year period, with 62 of them resulting in fatalities. That sobering statistic emphasises the razor-thin margin of error when working hundreds of feet above land. As a result, high-rise access systems will be required to maintain these architecturally distinct buildings.

Proposed solution

Our Spider Drone system combines artificial intelligence, machine learning, and computer vision with spider-shaped feet with electromagnetic characteristics that allow the drone to land vertically or upside down on metal surfaces like buildings and crawl against gravity. We use the force sensor to determine how fragile the glass is, and AI assists in keeping the device stable even in windy situations. The technology uses lidar to scan a building's exterior, memorise surfaces, and plan a cleaning path that is updated on a regular basis.

Value

In a task that hasn't seen a significant technology update in decades, automation can address safety problems while also increasing productivity. The use case makes a lot of sense: building managers in major cities need a way to clean the external glass of their buildings. Window cleaning is a $40 billion global industry. The surfaces are generally consistent, and the course is predictable. It's a winning combination for robotics development with a solid consumer base.

Final thoughts & next steps

Because of the peculiarity of the working space, the most essential consideration in constructing this robotic system for cleaning windows of a high-rise structure is optimising the weight of the complete system. The Spider Drone system will be designed to be lightweight by incorporating lightweight components. The use and effectiveness of this cleaning technique will be demonstrated through actual testing.

TABLE OF CONTENTS

EXECUTIVE SUMMARY **1**

DESIGN PROBLEM AND OBJECTIVES **3**

DETAILED DESIGN DOCUMENTATION **4**

- Overall Mechanical Design 4
- Actuators 6
- Servo Motor 6
- Navigation System and Controller 8
- Data Collection 14
- Data Communication 16
- Power Management 17

SAFETY **19**

CONCLUSION **21**

DESIGN PROBLEM AND OBJECTIVES

Design problem

- Automated window cleaning systems available in the market are not smart, in the sense that they cannot differentiate building textures, level of dirtiness of the cleaning area, in addition to the fact they cannot detect stains and classify them.
- An automated window cleaning device cannot distinguish a dusty window from a grime covered dirty window. It treats all glass surfaces alike and therein lays the ultimate problem to using robots for cleaning windows.
- Unlike humans, some robots cannot sense how much pressure its cleaning brush can exert over the glass.

Objectives

- To design an animal inspired robot that can move on land and air for the purpose of cleaning the windows of high rise buildings.
- To design a system that can detect stains on windows, fragility of the mirror and classify them
- To design a spider drone using lightweight materials

Design constraints

- Although the robot is expected to do decent at keeping the glass clean, there is too much that is involved and too many areas for error.
- The robot window cleaner does take a good amount of time to clean any decent sized window.
- Drone battery life expectancy

DETAILED DESIGN DOCUMENTATION

Overall Mechanical Design

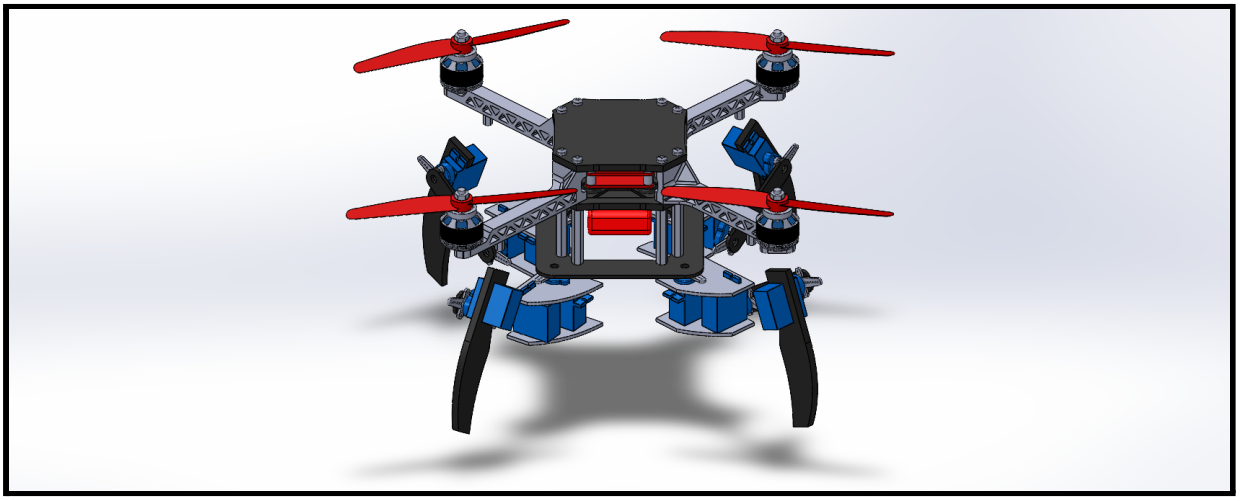

Figure 1: CAD drawing draft of the Spider Drone drawn using Solidworks software.

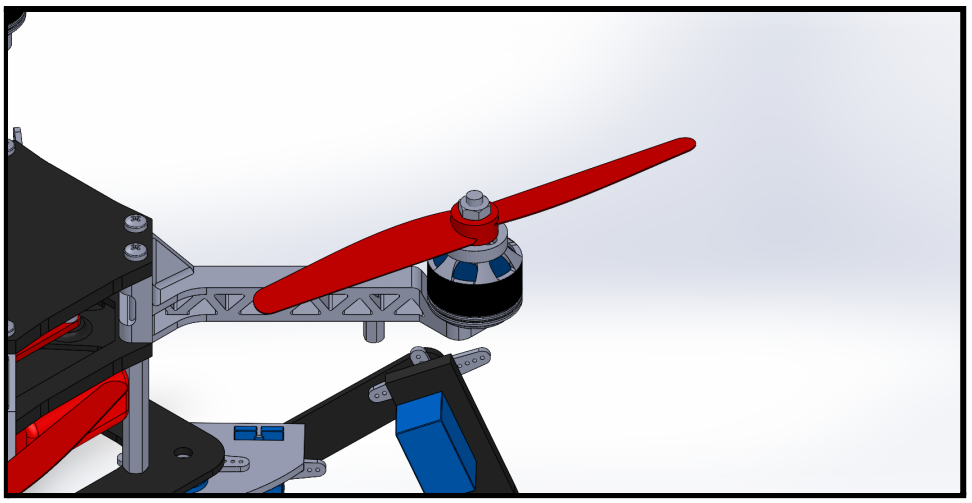

Figure 2: Spider Drone's arm with DC motor and propeller.

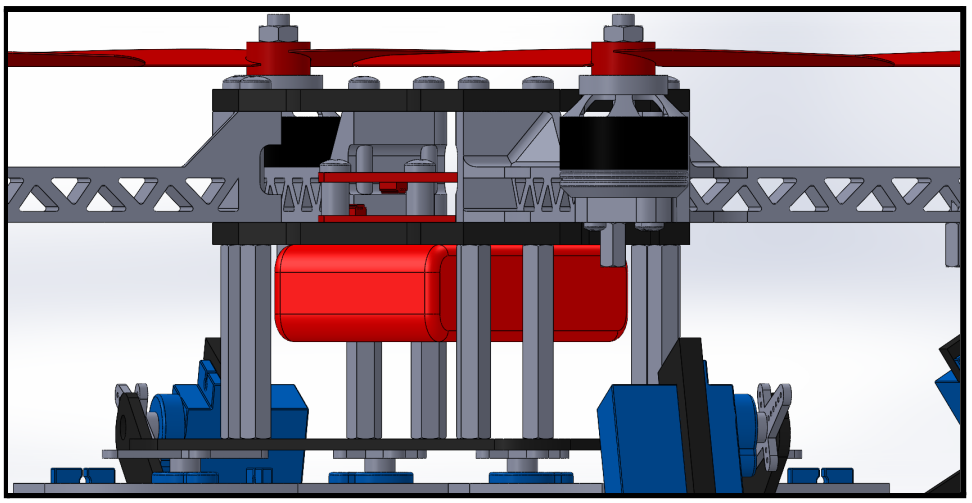

Figure 3: Spider Drone's battery and microcontroller slot.

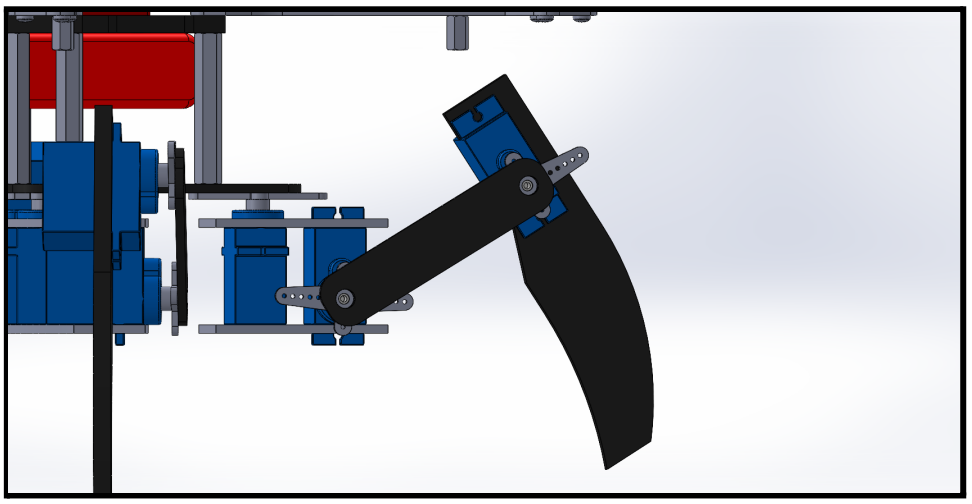

Figure 4: Spider Drone's leg with servo motors and electromagnetic feet.

Actuators

1. Servo Motor

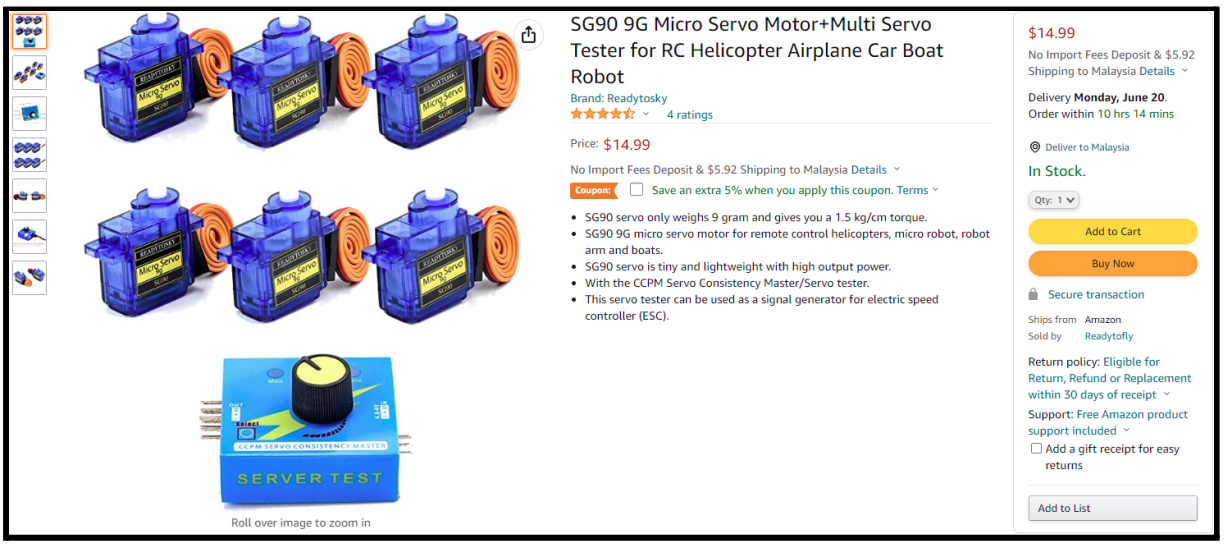

Figure 5: Servo motor used to move the Spider Drone legs.

A total of 12 servo motors are needed for the robot, 3 servos for each leg. This servo is chosen because it is tiny and lightweight with high output power. SG90 servo only weighs 9 grams and can give a 1.5 kg/cm torque. The working voltage of this servo is around 4.8V - 6V. The detailed dimensions and specifications are as shown in Figure 6.

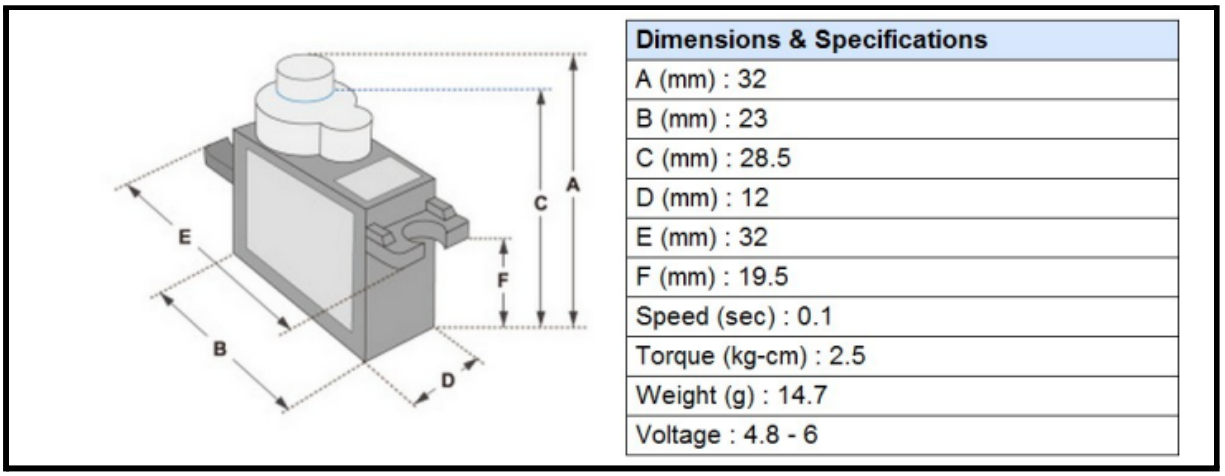

Dimensions & Specifications
A (mm) : 32
B (mm) : 23
C (mm) : 28.5
D (mm) : 12
E (mm) : 32
F (mm) : 19.5
Speed (sec) : 0.1
Torque (kg-cm) : 2.5
Weight (g) : 14.7
Voltage : 4.8 - 6

Figure 6: Detailed dimensions and specifications of the SG90 9G Micro Servo Motor.

2. Brushless DC Motor

Figure 7: Brushless DC motor used to lift up the Spider Drone.

A total of 4 brushless dc motors are needed to lift up the drone. This dc motor is chosen because of its compact size. It provides brilliant efficiency and offers great performance and value for money. The steel design of this motor is capable of withstanding competitive conditions. The lightweight design also makes them suitable for this drone. By using 4 of these motors on the drone will give a total of 3.2 kg thrust. The detailed specifications are as shown in Figure 8.

Model	D2836-6
Compatible LiPO Batteries	2S ~ 4S
Motor KV (RPM/V)	1500 rpm/v
Weight (gm)	70
Shaft Diameter (mm)	Φ4.0*49mm
Maximum Thrust (gm)	1150
Compatible Propellers Size (inch)	9×6/7×3
Required ESC (A)	40
Shipment Weight	0.00091 kg
Shipment Dimensions	11 × 6 × 5 cm

Figure 8: Detailed specifications of the DYS D2836-6 Outrunner Brushless Drone Motor.

Navigation System and Controller

The navigation system of our spider drone aids in navigation, so, by selecting all the components required for our spider drone we can figure out the system architecture and do some diagrams to show how the components are connected to each other.

1. Navio2 Emlid controller

The main function of the flight controller is to provide control for the electronic speed controller (ESC) to direct the rpm of motors based on inputs from the transmitter.

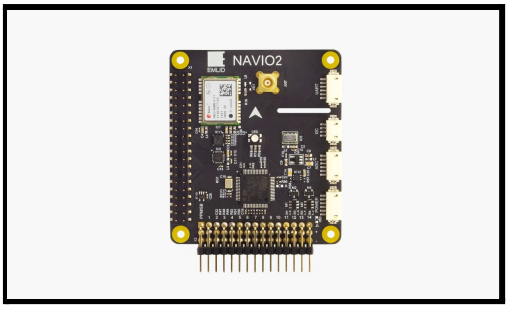

Figure 9: Navio2 Emlid Flight Controller

One of the advantages of using the Navio2 flight controller is because it has most of the components built-in so we do not need to use other components and integrate them to the board. The components that comes together in the Navio2 flight controller include:

1. Dual Inertial Measurement Unit (IMU)
2. Barometers measure altitude accurate to 10 cm of resolution
3. GNSS receiver tracks satellites from all over the world
4. Compass or magnetometer determines the direction of heading
5. Extension parts allocate for additional sensors and radio telemetry
6. Radio Communication co-processors accept PPM or SBUS inputs from receiver, and output 14 PWM channels for motors and servos at the servo rails

2. Electronic Speed Controller (ESC)

An electronic speed controller draws current to motor drive based on output from the Flight controller's servo rail. The ESC is graded with the maximum amount of current that it allows to pass through. Therefore, the selection of ESC is supposed to be such that the ESC rating is 1.2 to 1.5 times of the maximum rating of the rotor.

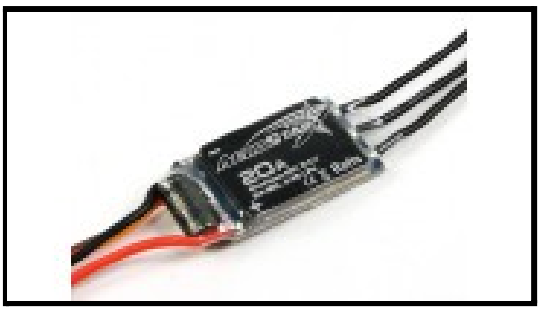

Figure 10: Electronic speed controller (ESC)

It is recommended to use ESCs without a Battery Eliminator Circuit (BEC). The navio2 flight controller can provide power supply to the ESC circuit through the servo rail

ESC rating /Maximum rotor rating = 20*A* /18*A* = 1.333.

3. Propellers

The propeller has to be selected based on the intended reliability and the size according to the motor speed. Carbon fibre propellers are of higher quality. After all, carbon fibre propellers also will break under similar circumstances of impact. A softer propeller, on the other hand, may even be more flexible and less fragile. They are also less stiffer in resisting air, thus may be better at reducing possibilities of motor heating in large drones. In fact, airframe and spider legs will have relatively large weight, so the actuators and propellers should be based on the weight of the frame.

Propellers are balanced on a propeller balancer using additional electrical tapes to make sure both blades are of equal mass. This minimises vibrations that could arise from unbalanced propellers.

Figure 11: Balanced propellers

4. GNSS receiver with antenna

A Global Navigation Satellite System (GNSS) receiver is the built-in GPS (and other satellites') receiver in Navio2. It requires an antenna that is raised high up away from the

flight controller to avoid magnetic interferences generated from the components leading to GPS glitches or inaccuracy of satellite signal reception. A GPS stand is where the antenna is being mounted to, while the other end connects to the flight controller's GNSS receiver through a micro coaxial (MCX) connector.

Figure 12: GNSS receciver with antenna

5. Transmitter

A high grade transmitter is what is required to enable good control of a flying vehicle. This is crucial because otherwise, fatal injuries could be the result of impaired communication. The Radiolink AT10II series is by far the most advanced transmitter the company has developed, offering hybrid of Direct Sequence Spread Spectrum (DSSS) and Frequency Hopping Spread Spectrum (FHSS) radio communication protocol with the receiver, which then communicates with the flight controller via Serial Bus (SBUS) single communication cable. The transmitter can be powered with a small 2200 mAh Li-Po battery provided by the supplier to save battery replacement cost. The transmitter will also come with the receiver in a pair.

Figure 13: Radio transmitter

6. Receiver

Based on our specifications, It is highly recommended to use a transceiver pair whose receiver can communicate with Navio2 through SBUS communication protocol. The R12DS receiver receives signals from the transmitter and then relay the signal to the flight controller via SBUS communication protocal. SBUS is a new signle-wire communication protocol(save a lot of messy wirings) that is supported by Navio2. One signal wire transmit all radio values of all 12 channels from the receiver (which is in turn transmitted wirelessly from the

transmitter) to the 9 flight controller. To connect the receiver to the flight controller, three female-to-female jumpers to connect the signal, positive and negative terminals of the SBUS line from the reveiver to the respective signal, positive and negative terminals in the servo rail of the Navio2 flight controller.

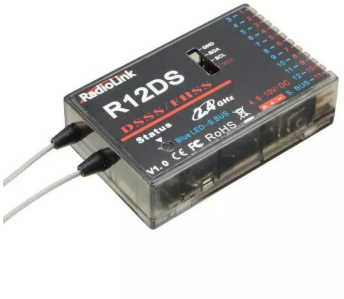

Figure 14: Receiver

7. MicroSD card

Similar to a computer that requires Hard Disk Drive (HDD) or the latest Solid State Drive (SSD) as storage, the Raspberry Pi uses a microSD card in which the operating system (Raspbian) is being installed. It contain crucial files that store system data such as connection IP addresses, file directories with codings for different features, etc.

8. Lithium-Polymer (Li-Po) Battery

Lithium battery has one of the highest power-to-weight ratio, making it one of the best choices for powering UAVs. However, Li-Po battery has to be taken care of thoroughly and have its voltage monitored so that each cell stays at least 3V (3.4V to be safe) before it is being recharged.

Figure 15: Lithium-Polymer (Li-Po) Battery

The Li-Po battery to be used is a 5200 mAh battery with 25 C rating. To determine if the discharge limit, C is sufficient for the motors used, the maximum discharge current is calculated from.

$Imax = C \times Ah = 25 \times 5.2 = 130A$

Li-Po battery size selection has to be made by taking into account the size of the copter for optimum flying duration. If a large drone is powered by relatively smaller sized battery, the flight time will be limited. If a small drone is powered by large batteries out of the optimum range, the battery drains even faster due to the extra weight allocated.

9. BB Alarm

To protect the Li-Po battery from possibilities of over-discharging, a BB alarm – a loud warning alarm when battery voltage of any cells of the Li-Po dropped below set values – is in place to monitor the battery voltage from time to time. As studied, if the battery is allowed to discharge under 3 V per cell, it can be permanently damaged and never be able to recharge back again.

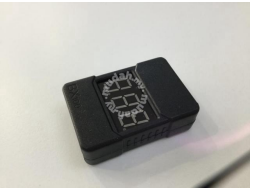

Figure 16: BB Alarm

10. Power Module

Because the same Li-Po battery supplies both the Raspberry Pi and the motors, a power module controls the voltage across the two according to their optimal requirements. A power module splits the battery current to the power distribution board (to the ESCs) and the power port in the navio2 flight controller. The power module should be carefully selected such that the connector matches that of the battery.

11. Telemetry

A radio telemetry consists of a Universal Serial Bus (USB) ground module to be connected to the Ground Control Station (GCS) which is the laptop, and a Universal Asynchronous Receiver-Transmitter (UART) air module to be connected to the navio2 flight controller. The GCS's purpose is to plan flight path and monitor flight data. If the UART port's serial lines have to be used for other purposes such as for obstacle avoidance, or the GPIO 17 of the UART port is used for installation of turn-off switch, the Air Module of the telemetry can be

interchanged with that of the Ground Module, with the Ground Module's USB head connected to the RPi3. The Air Module's UART requires an additional USB-TTL CP2012 converter to communicate with the GCS.

Figure 17: Telemetry

12. Raspberry Pi3 Model B

Raspberry Pi is a micro-computer at the size of an average credit card for data processing. With the general purpose Input Output (GPIO) pins, the Raspberry Pi has high processing capability to run functions like flying a drone. The Navio2 will be connected directly to the Raspberry Pi3 that has 40 pins, so 37 pins out of 40 is utilised by the flight controller.

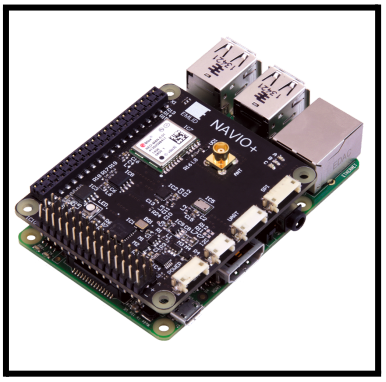

Figure 13: Raspberry Pi3 Model B with navio2

The System architecture can be seen in the figure below to show the overall system naviagton and how the compoenets are connected to each other.

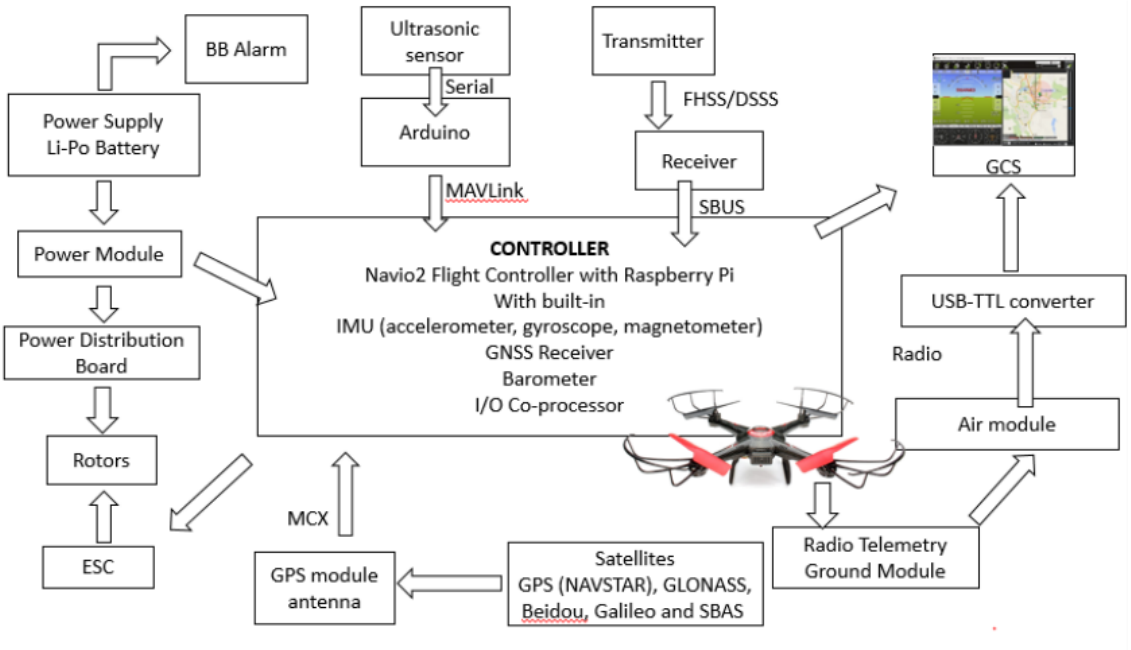

Figure 14: System architecture

Data Collection

The overall circuit connection of the spider drone, is shown in the figure down. Where all the compents are connected to the brain ”Controller” . Thus the picture shows clearly how data collection can processed, and signls transmitted and received.

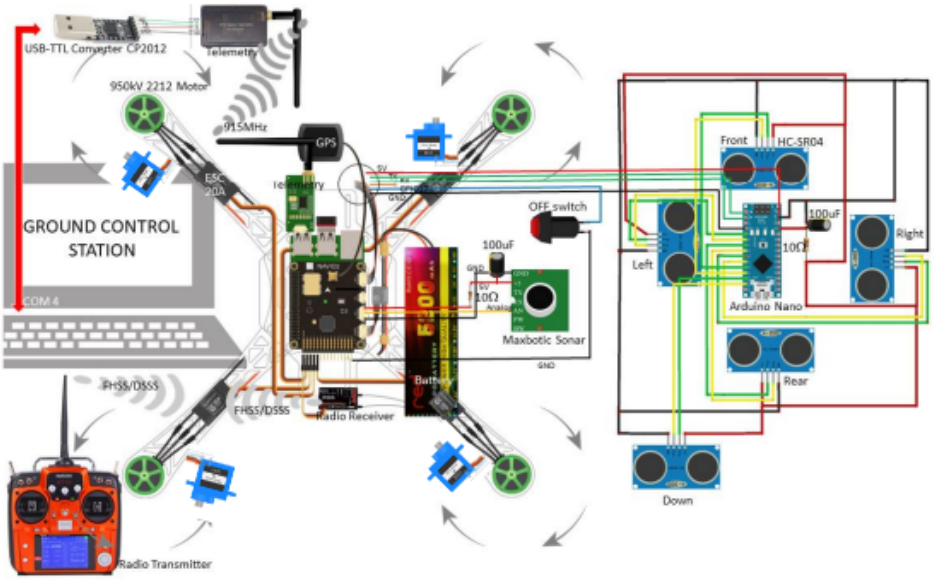

Figure 15: overall circuit connection of the spider drone

The firame consist of a power distribution board, positive and ground terminals on the power distribution board to solder the power module and all 4 of ESCs to each corners of the power distribution board. All 4 ESCs and motors and servos for the legs are the same and can be connected to anywhere in the power distribution board. The central cable(s) (usually) is the signal cable to be connected to the navio2 flight controller.

The signal wire (central of ESC) consists of 2 wires (for ESCs without BEC) and 3 wires (for ESCs with BEC).

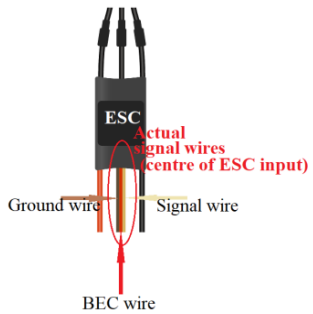

(Centre of signal wires)

To connect the receiver to the flight controller, three female-to-female jumpers are needed to connect the signal, positive and negative terminals of the SBUS line from the receiver to the respective signal, positive and negative terminals in the servo rail of the Navio2 flight controller.

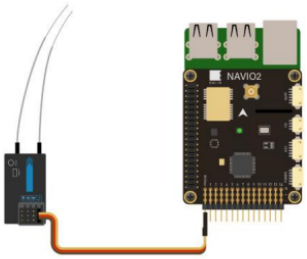

The telemetry module comes in a pair – one air module and another ground module. The air module usually comes with a UART micro-header pin connection to be connected to the navio2's UART port as shown below, whereas the ground module comes with USB connector to connect to the PC.

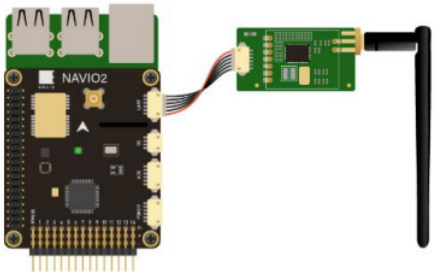

Data Communication

In the proposed DDC-IoT protocol, we use two parameters: transmission power (TP) and beacon frequency (BF). Beacon frequency should be at level because high frequency leads to interference and low frequency leads to packet dropping issues. We are using the beacon frequency as per network situation by using channel situation (CS), and queue factor (QF).

The drone-to-drone data communication is further connected to IoT networks by using 5G based network infrastructure. The 5G based services and technologies are able to provide a fully connected, fast and effective platform to make data communication possible between drones and IoT smart devices. This level provides network resources and scheduling methods for a better network environment. This level also offers real-time, on-demand, reconfigurable, end-to-end coordination, and intelligent services. High frequency based on band 6 GHz with a 10 Gb/s is used for data rate. Another feature of this technology is providing an efficient IoT devices data communication infrastructure without any extra and costly hardware-specific methods. This phase is also useful for low latency around 1ms and handling 1 million devices/km2. The deployment of new services is set at less time (around 1 hour).

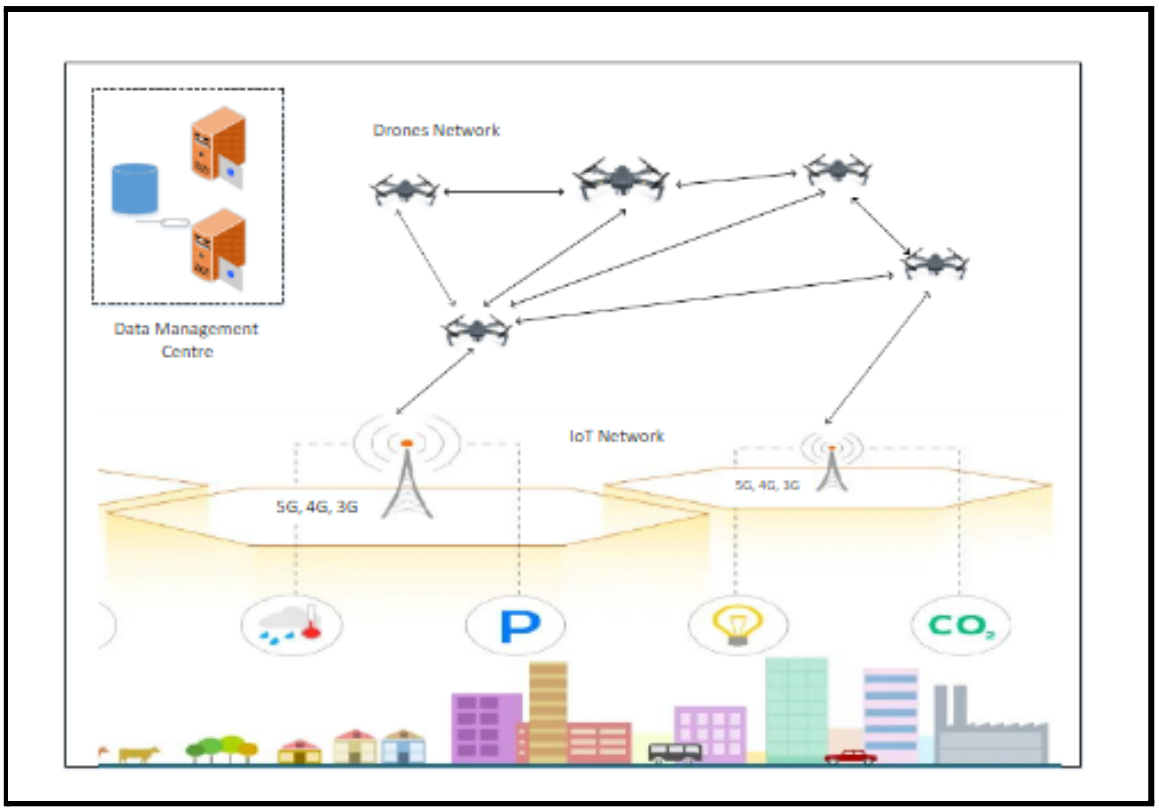

Figure 14:

Power Management

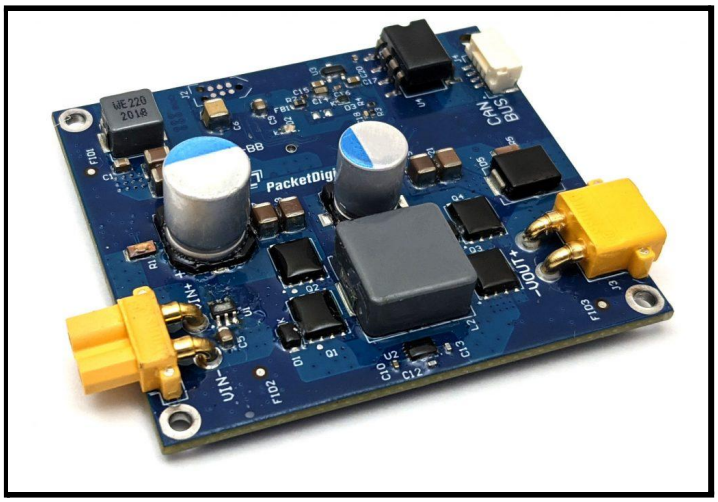

Figure 15:

It's essential to account for sunlight changes, solar-panel temperature, vehicle orientation, and other factors, for efficient solar power generation during long-endurance drone operations. Packet Digital's Maximum Power Point Tracker (MPPT) hardware and embedded algorithms take precise power measurements and adjust settings quickly to maintain maximum power transfer from solar panels to battery storage, pushing the limits on solar UAS operations.

MPPT Features

- Fast-tracking (1024 Hz)
- Super-fast adaptive search algorithm typically converges within five samples
- 200W peak capacity
- Half the size of the competition
- High efficiency (94% to 98%)
- High resolution for accurate tracking with sharp knee in high-performance PV array
- Customization available to meet power and form-factor requirements

Converter Architecture	Buck-Boost
Input Voltage Range	12.5V to 50V
Output Voltage Range	Up to 50V
Absolute Max Input Voltage	55V
Absolute Max Output Voltage	55V
Maximum Input Current	5A
Maximum Output Current	5A
Over-temperature Threshold	60C with 5C Hysteresis
Switching Frequency	400 kHz
MPPT Update Frequency	500 Hz
Dimensions	60.96mm x 53.34mm x 17.4mm (LxWxH)
Mounting holes	#2 holes in each corner of PCB
Weight with VIN and VOUT Connectors	31 grams
Weight without VIN and VOUT Connectors	28 grams
PCB Coating	HumiSeal 1B31

SS-MPPT-BB-V2 Specifications

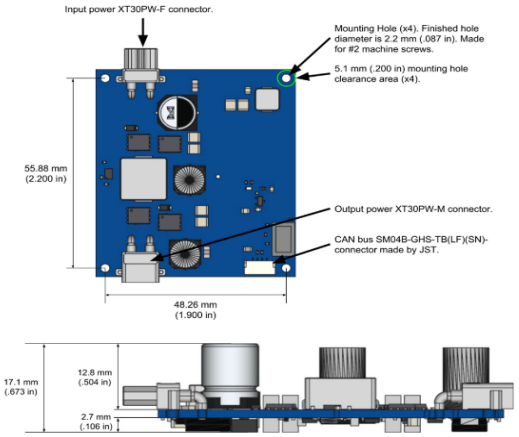

Figure 16:

SAFETY

1. Obstacle Avoidance Sensor

The Infrared Obstacle Avoidance Sensor has a pair of infrared transmitting and receiving sensors. The infrared LED emits Infrared signals at a certain frequency and when an obstacle appears on the line of infrared light, it is reflected back by the obstacle which is sensed by the receiver.

Figure 17:

2. Attitude Mode (ATTI)

ATTI mode (short for Attitude mode) is a flight mode in drones where the GPS positioning and other visual positioning systems are disabled. In this mode, the flight has to be done completely manually. Without the aid of automatic positioning systems, a drone will not maintain a stable hover. This means that it can drift sidewards or lose altitude without pilot intervention. It will also maintain motion in any direction unless forced to steer it in any other direction.

Basically, ATTI mode is the mode that the drone switches to when things go wrong. Your drone may lose GPS reception when it flies under a canopy or when it flies near a strong source of signal interference. When this happens, you can suddenly lose the GPS stabilisation feature that you have heavily relied on.

Learning to fly in ATTI modes is also important if you're planning to fly your drone indoors. Indoor space is great because it's outside of FAA jurisdiction. However, indoor flight may also be one of the most difficult things you can do as a drone pilot. The dynamics of drone flight change massively when you're flying near walls and ceilings. You also do not have the benefit of GPS stabilisation when indoors.

Professional drone photographers and filmmakers often fly in ATTI mode on purpose. Flying in ATTI mode allows them to shoot smoother videos without the jerky motion that typically results from sudden braking or constant GPS correction.

1) **Battery Life: Average of 25 minutes (at 5,000 feet MSL)**
2) **Max Wind Speed Resistance: 35mph**
3) **Battery Voltage: Displayed on home screen**

CONCLUSION

It is obvious that drone technology is an important part of the future of warfare and is set to become a big commercial industry. The fact that drones capabilities pose a threat to the liberties of people around the globe is also apparent. Legislating on drones now is of paramount importance because it sets the necessary limitations to protect rights as drones are used in the future.