PROJECT

SPIDER DRONE (LAND & AIR)

GROUP 1

About Project

- Windows and facades of taller buildings become more inaccessible to typical cleaners.
- High-rise access systems will be required to maintain the architecturally distinct buildings.
- Spider Drone system combines artificial intelligence, machine learning, and computer vision.
- Spider-shaped feet with electromagnetic characteristics that allow the drone to land vertically or upside down on metal surfaces.

DESIGN PROBLEM

- Cannot differentiate building textures, level of dirtiness of the cleaning area
- They cannot detect stains and classify them.
- Cannot distinguish a dusty window from a grime covered dirty window.
- Some robots cannot sense how much pressure its cleaning brush can exert over the glass.

OBJECTIVES

- To design an animal inspired robot that can move on land and air for the purpose of cleaning the windows of high rise buildings.
- To design a system that can detect stains on windows, fragility of the mirror and classify them
- To design a spider drone using lightweight materials

DESIGN CONSTRAINTS

- Although the robot is expected to do decent at keeping the glass clean, there is too much that is involved and too many areas for error.
- The robot window cleaner does take a good amount of time to clean any decent sized window.
- Drone battery life expectancy

DETAILED
DESIGN DOCUMENTATION

Mechanical Design

Overall Mechanical Design

CAD drawing draft of the Spider Drone drawn using Solidworks software.

Mechanical Design

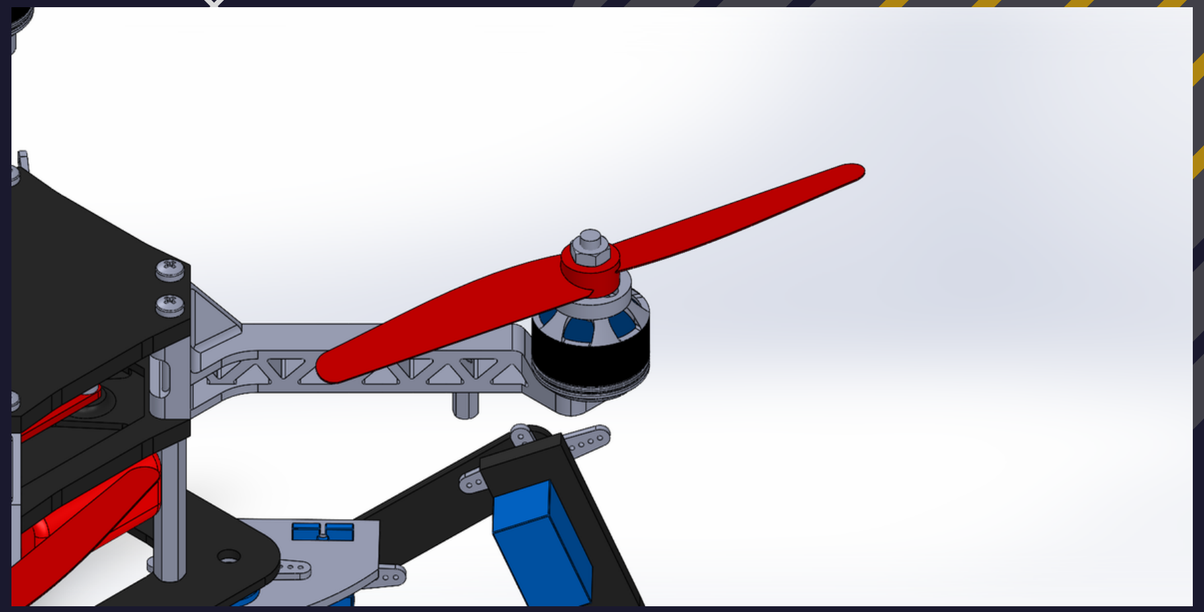

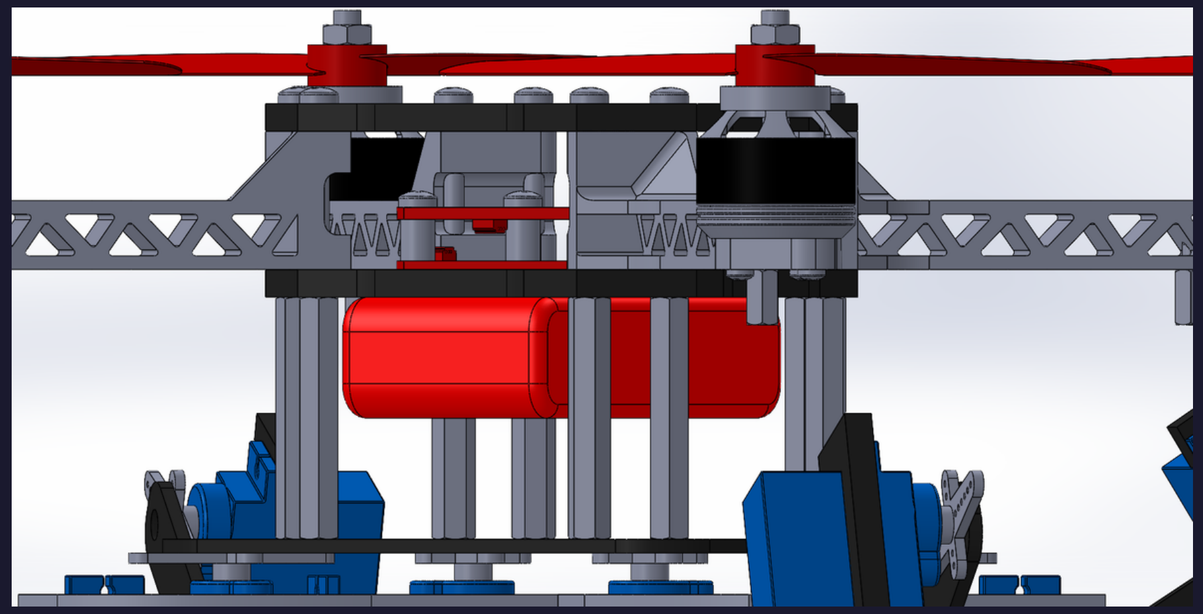

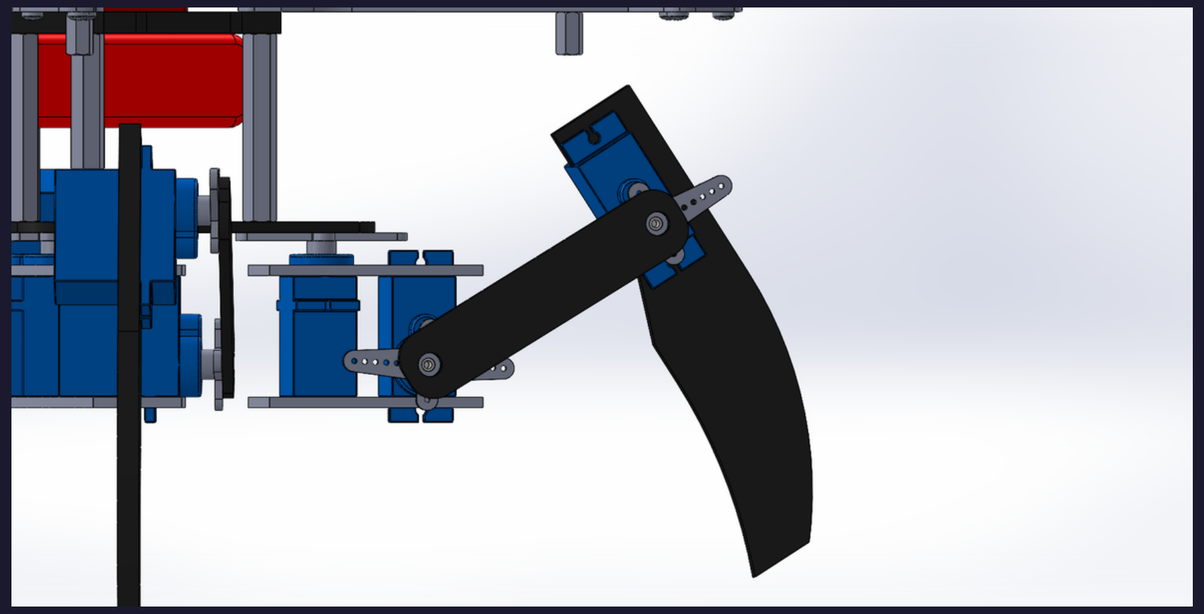

Actuators

SERVO MOTOR

- 12 servo motors are needed
- 3 servos for each leg
- Tiny and Lightweight
- 1.5 kg/cm torque
- Working voltage around 4.8V - 6V

A (mm) : 32
B (mm) : 23
C (mm) : 28.5
D (mm) : 12
E (mm) : 32
F (mm) : 19.5
Speed (sec) : 0.1
Torque (kg-cm) : 2.5
Weight (g) : 14.7

Actuators

BRUSHLESS DC MOTOR

- 4 brushless dc motors
- Compact size
- capable of withstanding competitive conditions
- 3.2 kg thrust when using 4 of these motors

Model	D2836-6
Compatible LiPO Batteries	2S ~ 4S
Motor KV (RPM/V)	1500 rpm/v
Weight (gm)	70
Shaft Diameter (mm)	Φ4.0*49mm
Maximum Thrust (gm)	1150
Compatible Propellers Size (inch)	9×6/7×3
Required ESC (A)	40
Shipment Weight	0.00091 kg
Shipment Dimensions	11 × 6 × 5 cm

Navigation System and Controller

The navigation system of our spider drone aids in navigation, so, by selecting all the components required for our spider drone we can figure out the system architecture and do some diagrams to show how the components are connected to each other.

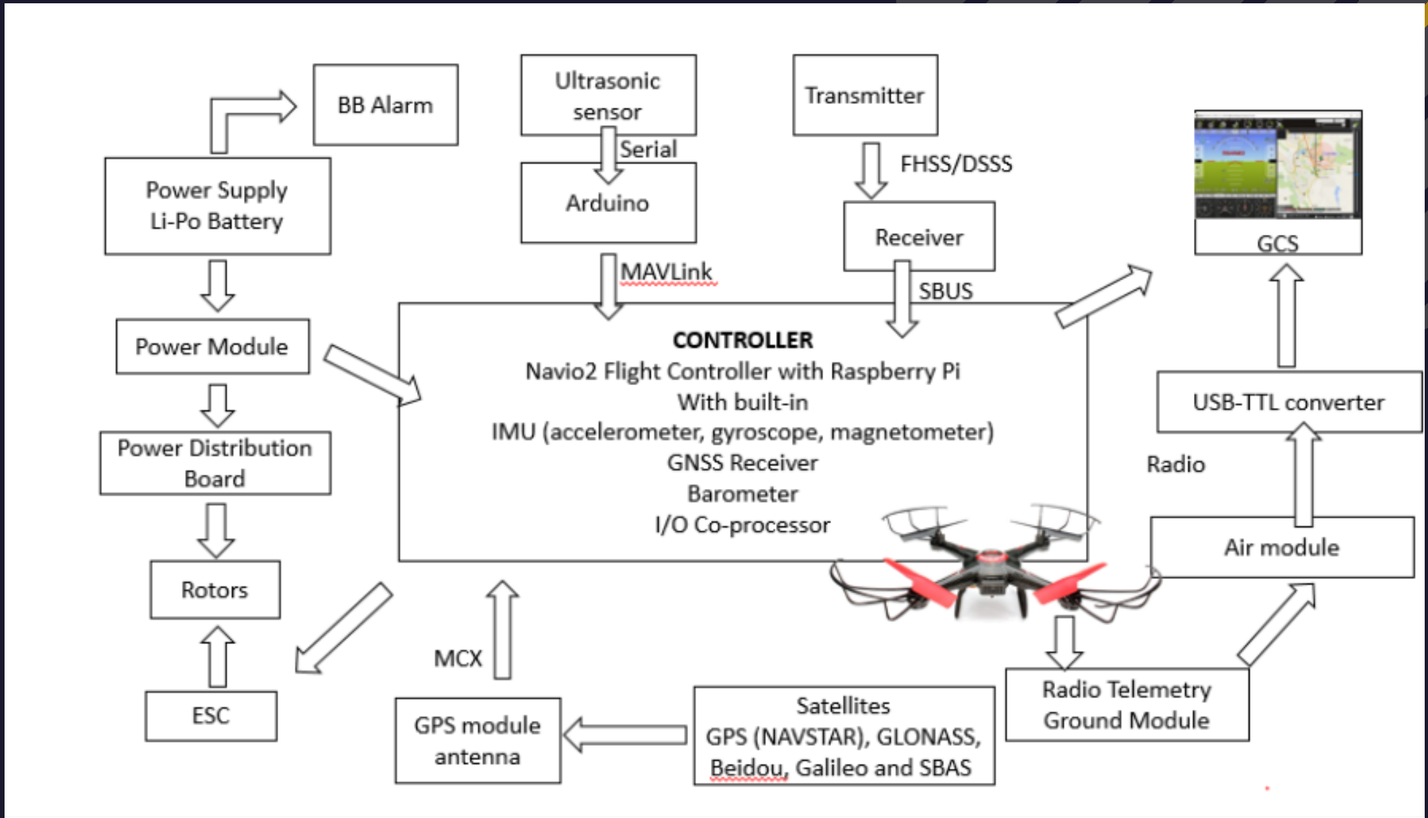

Data collection

Raspberry Pi

LRaspberry Pi is a micro-computer at the size of an average credit card for data processing. With the general purpose Input Output (GPIO) pins, the Raspberry Pi has high processing capability to run functions like flying a drone. The Navio2 will be connected directly to the Raspberry Pi3 that has 40 pins, so 37 pins out of 40 is utilised by the flight controller.

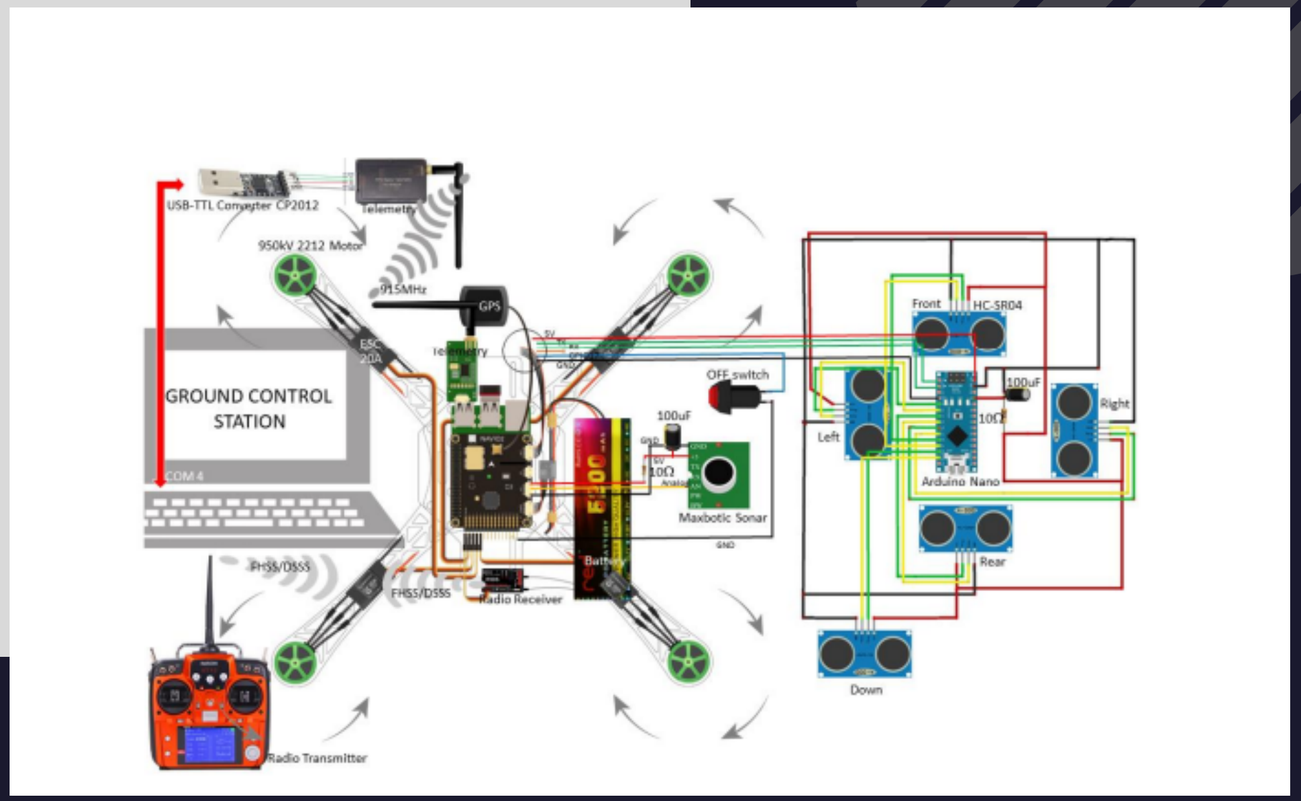

Data communication

DDC-IoT protocol

The drone-to-drone data communication is further connected to IoT networks by using 5G based network infrastructure. The 5G based services and technologies are able to provide a fully connected, fast and effective platform to make data communication possible between drones and IoT smart devices. This level provides network resources and scheduling methods for a better network environment. This level also offers real-time, on-demand, reconfigurable, end-to-end coordination, and intelligent services. High frequency based on band 6 GHz with a 10 Gb/s is used for data rate. Another feature of this technology is providing an efficient IoT devices data communication infrastructure without any extra and costly hardware-specific methods. This phase is also useful for low latency around 1ms and handling 1 million devices/km2. The deployment of new services is set at less time (around 1 hour).

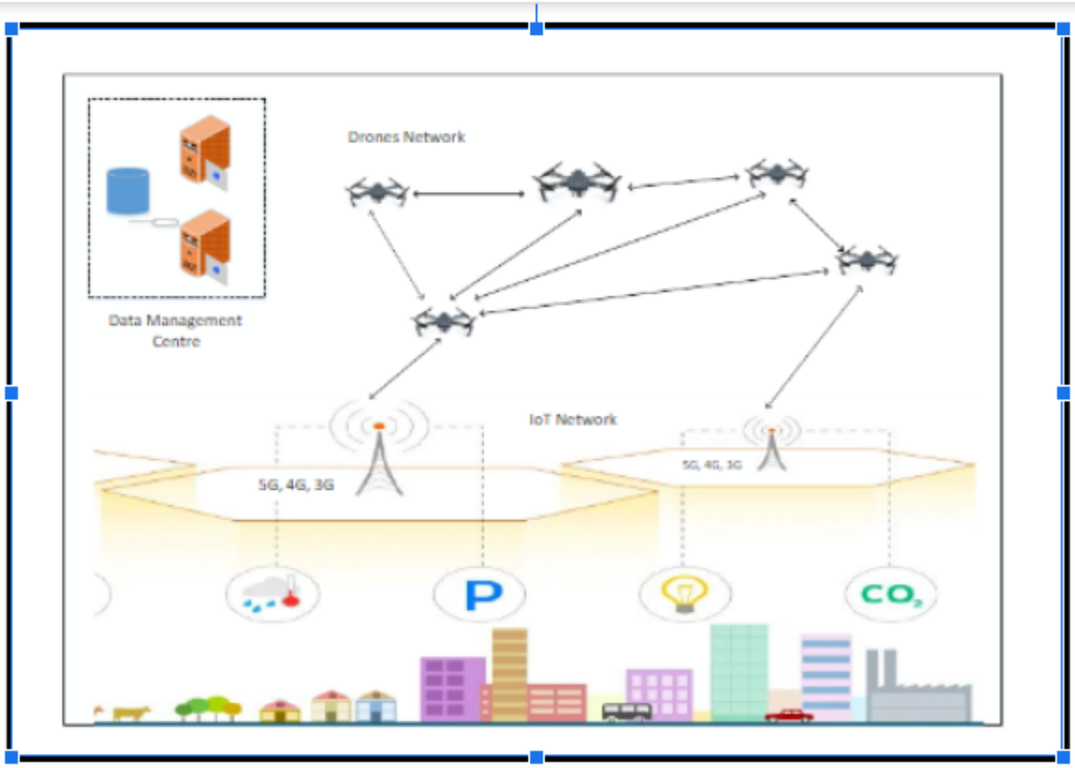

Power management system

MPPT (Maximum Power Point Tracker)

An MPPT, or maximum power point tracker is an electronic DC to DC converter that optimizes the match between the solar array (PV panels), and the battery bank or utility grid.

THANKS
FOR WATCHING