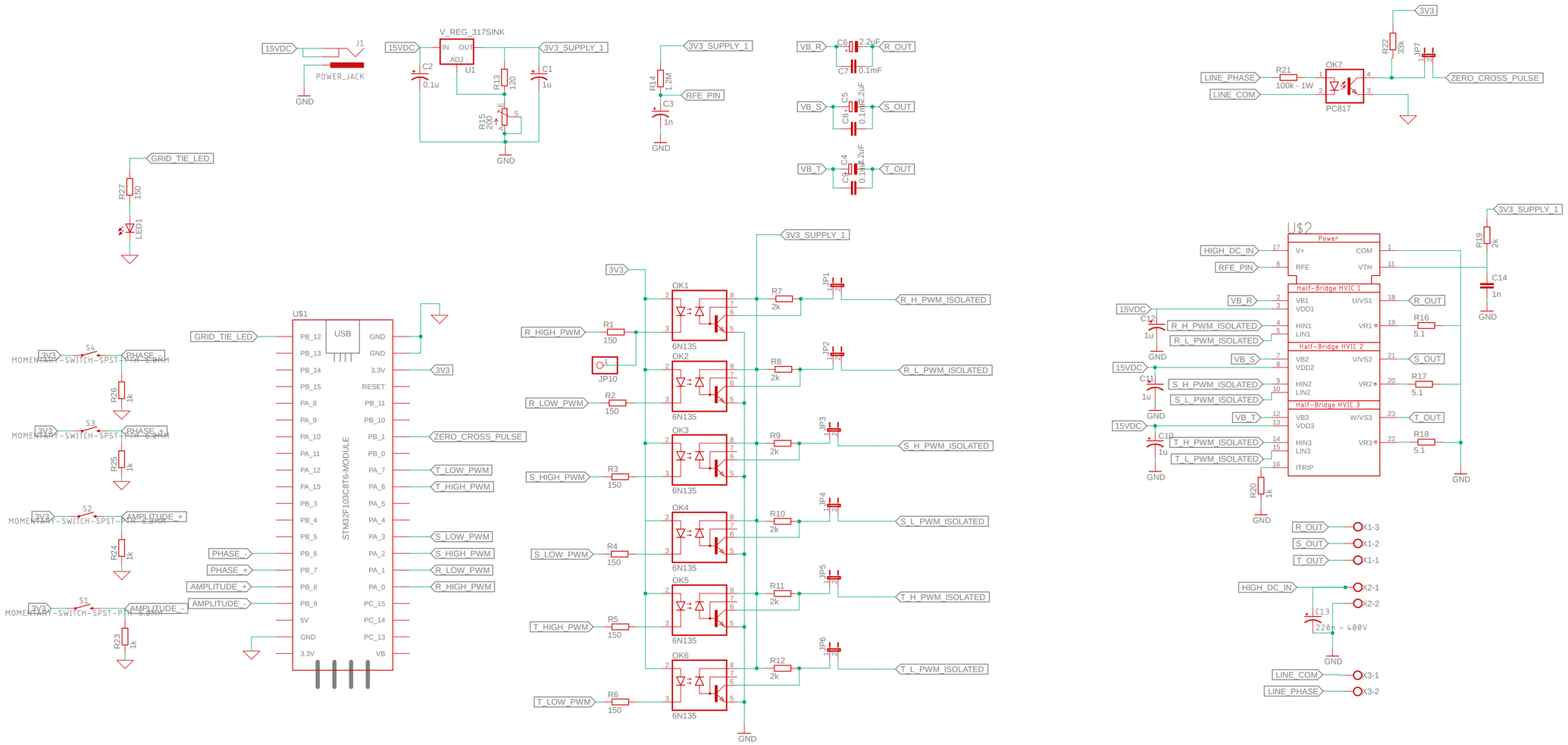
15VDC
J1
POWER_JACK
GND
V_REG_317SINK
IN
OUT
ADJ
U1
C2
0.1u
R13
120
C1
1u
3V3_SUPPLY_1
R15
200
R14
1.2M
RFE_PIN
C3
1n
VB_R
C6
2.2uF
R_OUT
C7
0.1mF
VB_S
C5
S_OUT
VB_T
C4
T_OUT
3V3
R22
33K
JP7
LINE_PHASE
R21
100k - 1W
OK7
PC817
LINE_COM
ZERO_CROSS_PULSE
GRID_TIE_LED
R27
150
LED1
U$1
USB
STM32F103C8T6-MODULE
PB_12
PB_13
PB_14
PB_15
PA_8
PA_9
PA_10
PA_11
PA_12
PA_15
PB_3
PB_4
PB_5
PB_6
PB_7
PB_8
PB_9
5V
GND
3.3V
GND
3.3V
RESET
PB_11
PB_10
PB_1
PB_0
PA_7
PA_6
PA_5
PA_4
PA_3
PA_2
PA_1
PA_0
PC_15
PC_14
PC_13
VB
ZERO_CROSS_PULSE
T_LOW_PWM
T_HIGH_PWM
S_LOW_PWM
S_HIGH_PWM
R_LOW_PWM
R_HIGH_PWM
PHASE_-
PHASE_+
AMPLITUDE_+
AMPLITUDE_-
S4
S3
S2
S1
R26
1k
R25
1k
R24
1k
R23
1k
R_HIGH_PWM
R1
150
JP10
R_LOW_PWM
R2
150
S_HIGH_PWM
R3
150
S_LOW_PWM
R4
150
T_HIGH_PWM
R5
150
T_LOW_PWM
R6
150
OK1
OK2
OK3
OK4
OK5
OK6
6N135
R7
2k
R8
2k
R9
2k
R10
2k
R11
2k
R12
2k
JP1
JP2
JP3
JP4
JP5
JP6
R_H_PWM_ISOLATED
R_L_PWM_ISOLATED
S_H_PWM_ISOLATED
S_L_PWM_ISOLATED
T_H_PWM_ISOLATED
T_L_PWM_ISOLATED
U$2
Power
HIGH_DC_IN
RFE_PIN
V+
RFE
COM
VTH
R19
2k
C14
1n
Half-Bridge HVIC 1
VB_R
VB1
VDD1
U/VS1
R_OUT
R_H_PWM_ISOLATED
HIN1
LIN1
VR1
R16
5.1
R_L_PWM_ISOLATED
C12
1u
Half-Bridge HVIC 2
VB_S
VB2
VDD2
V/VS2
S_OUT
S_H_PWM_ISOLATED
HIN2
LIN2
VR2
R17
5.1
S_L_PWM_ISOLATED
C11
1u
Half-Bridge HVIC 3
VB_T
VB3
VDD3
W/VS3
T_OUT
T_H_PWM_ISOLATED
HIN3
LIN3
VR3
R18
5.1
T_L_PWM_ISOLATED
C10
1u
ITRIP
R20
1k
X1-3
X1-2
X1-1
X2-1
X2-2
C13
220n - 400V
X3-1
X3-2