VLSI (Very Large Scale Integration) Design (CPE434)

Introduction

Personal Information

- Dr. Muhammad Naeem Awais (Associate Professor)
- B-Block: Room # 8
- E-mail: naeem.awais@cuilahore.edu.pk
- Phone: +92 (42) 111-001-007 (Ext:836)

What is this Course (VLSI Design) all about?

- What will you learn?
  - **<u>Understanding</u>** digital circuits
  - **<u>Designing</u>** digital circuits
  - **<u>Optimizing</u>** digital circuits w.r.t. different quality metrics:
    - Cost
    - Speed/Delay
    - Power dissipation
    - Reliability etc…

SoS (Scheme of Studies)→CUI

Course Objectives:

- To familiarize the students with the fundamental concepts of VLSI design and its applications.
- To introduce students to design, analysis and fabrication procedure for VLSI circuits.
- After completing this course a student is able to transform a given circuit into an integrated circuit, simulate its behavior, analyze the cost involved and finally suggest any improvement if possible.

Course Outline:

- Revision of the Semiconductor Theory, IC Fabrication Methodologies & Processes, Details of MOS Transistors, Fabrication and Analysis of PMOS & NMOS Transistors, Inverters, Resistors, Capacitors, Gates etc, Introduction of VLSI CAD Tools & Simulation Modeling, Implementation of Gates, Mux, Counters, Adders, Multipliers and Memories etc, IC Layout Design Rules, Chip Layout, Design Calculations, Gate and Transistor Level Schematics and their Conversion to Layouts, Design Optimization, Interconnects, Minimization of Die Area & Power and Maximization of Speed, Modeling Chips using FPGAs, Design Project.

Course Learning Outcome (CLOs)

- After successfully completing the course, the students will be able:

1. To comprehend the CMOS theory, quality matrix of CMOS circuit and to relate these concepts for the chip manufacturing process of integrated circuits using modern photolithographic fabrication process (PLO1: C3)
2. To analyze the design constraints including resources, delay & power consumption of combinational logic circuits, sequential logic circuits and large arithmetic blocks (PLO2: C4)
3. To design combinational logic circuits, sequential logic circuits and large arithmetic blocks with minimum resources, small delay & less power consumption using VLSI design circuit families (PLO3: C5)

- After successfully completing the lab of this course, the students will be able:

4. To analyze and reproduce the design of digital circuit using Electronic Design Automation (EDA) tools (PLO5: P3)
5. To explain the assigned project in the form of report (PLO10: A3)
6. To design the digital circuit using EDA tools (PLO3: C5)

Text Books

- **CMOS VLSI Design, A Circuits and Systems Perspective**
  - Neil H.E. Weste and David Harris
  - 4th Edition, Addison Wesley, 2010
- **Digital Integrated Circuits, A Design Perspective**
  - Jan. M. Rabaey, A. Chandrakasan, and B.Nikolic
  - 2nd Edition, Prentice Hall

Chapter 1: Introduction...Outline

- A Brief History
- Silicon, pn-junctions and transistors
- Operation of MOS Transistors
- CMOS circuits
- Pass Transistors
- CMOS Latches & Flip-Flops
- Fabrication steps for CMOS circuits
- CMOS Gate Design
- Standard Cell Layouts
- Stick Diagrams
- VLSI Design Flow
- Circuit Elements

History…

- 1947- the first functioning point contact transistor- John Bardeen and Walter Brattain built @ Bell Laboratories (Nobel prize 1956)
- Soon after inventing the point contact transistor, Bell Labs developed the bipolar junction transistor (BJT)
- Bipolar transistors were more reliable, less noisy, and more power-efficient as compared to Vacuum Tubes
- 1958-first prototype of an integrated circuit, (germanium slice and gold wires)-Jack Kilby @ Texas Instruments. (Nobel prize 2000)
- Early integrated circuits primarily used bipolar transistors.
- The quiescent power dissipated by their base currents, drawn even when the circuit is not switching, limits the maximum number of transistors that can be integrated onto a single die.

Cont…History

- By the 1960s, Metal Oxide Semiconductor Field Effect Transistors (MOSFETs) began to enter production.
- They come in two flavors: nMOS and pMOS.
- MOSFETs offer the compelling advantage that they draw almost zero control current while idle.
- The original idea of FETs dated back to the German scientist Julius Lilienfield in 1925.
- Structure closely resembling the MOSFET was proposed in 1935 by Oskar Heil, but materials problems foiled early attempts to make functioning devices.
- In 1963, Frank Wanlass @ Fairchild described the first logic gates using MOSFETs.
- Fairchild's gates used both nMOS and pMOS transistors, earning the name Complementary Metal Oxide Semiconductor(CMOS)
- The circuits used discrete transistors but consumed only nanowatts of power, six orders of magnitude less than their bipolar counterpart.

Cont…History

- With the development of the silicon planar process, MOS integrated circuits became attractive for their low cost because each transistor occupied less area and the fabrication process was simpler.
- Early commercial processes used only pMOS transistors and suffered from poor performance, yield, and reliability.
- Processes using nMOS transistors became common in the 1970s.
- Intel pioneered nMOS technology with its 1101 256-bit static random access memory and 4004 4-bit microprocessor.
- While the nMOS process was less expensive than CMOS, nMOS logic gates still consumed power while idle. Power consumption became a major issue in the 1980s as hundreds of thousands of transistors were integrated onto a single die.
- CMOS processes were widely adopted and have essentially replaced nMOS and bipolar processes for nearly all digital logic applications.
- The first CMOS microprocessor is the 8-bit RCA 1802 introduced in 1974.

Cont…History

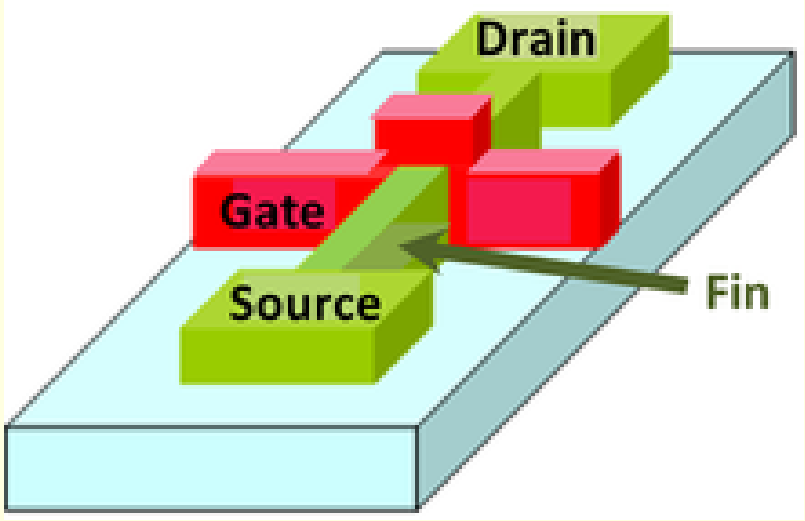

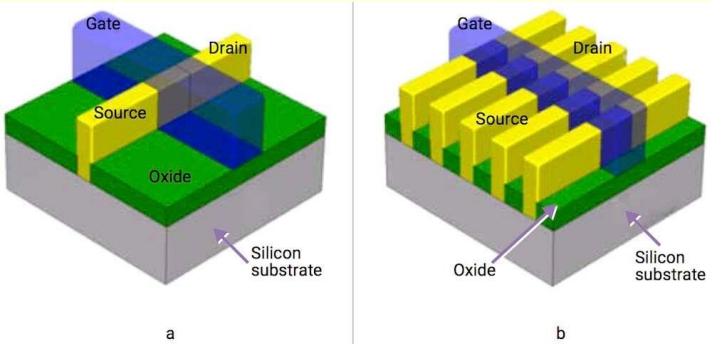

- In 2011 Intel led the industry with the introduction of a fundamentally different technology for microprocessor families: 3D transistors manufactured at 22 nm.
- FinFETs are three-dimensional structures with vertical fins forming a drain and source.
- FinFETs have an excellent subthreshold slope and a higher voltage gain than planar MOSFETs.

Brief History in a Slide

- Vacuum Tubes
- 1947-Point Contact Transistor
- 1948-Bipolar Junction Transistor
- 1958-BJT based Integrated Circuit (Prototype)
- pMOSFET
- 1970s-nMOSFET
- 1980s-CMOS Technology
- 2011-FinFET

Computer Generations

Generation	Technology	Approx Dates
First	Vacuum Tube	1942-1959
Second	Transistors	1959-1964
Third	ICs SSI/MSI	1964-1973
Fourth	Microprocessor LSI/VLSI	1973-1991
Fifth	ULSI/AI	1991 onwards

Processor	Transistor count	Date of introduction	Manufacturer	Process	Area
Intel 4004	2,300	1971	Intel	10 µm	12 mm²
Intel 8008	3,500	1972	Intel	10 µm	14 mm²
MOS Technology 6502	3,510	1975	MOS Technology	8 µm	21 mm²
Motorola 6800	4,100	1974	Motorola	6 µm	16 mm²
Intel 8080	4,500	1974	Intel	6 µm	20 mm²
RCA 1802	5,000	1974	RCA	5 µm	27 mm²
Intel 8085	6,500	1976	Intel	3 µm	20 mm²
Zilog Z80	8,500	1976	Zilog	4 µm	18 mm²
Motorola 6809	9,000	1978	Motorola	5 µm	21 mm²
Intel 8086	29,000	1978	Intel	3 µm	33 mm²
Intel 8088	29,000	1979	Intel	3 µm	33 mm²
Intel 80186	55,000	1982	Intel	3 µm	
Motorola 68000	68,000	1979	Motorola	4 µm	44 mm²
Intel 80286	134,000	1982	Intel	1.5 µm	49 mm²
Intel 80386	275,000	1985	Intel	1.5 µm	104 mm²
ARM 1	25,000	1985	Acorn		
ARM 2	25,000	1986	Acorn		
Intel 80486	1,180,235	1989	Intel	1 µm	173 mm²
ARM 3	300,000	1989	Acorn		
R4000	1,350,000	1991	MIPS	1.0 µm	213 mm²
ARM 6	30,000	1991	ARM		
Pentium	3,100,000	1993	Intel	0.8 µm	294 mm²
ARM 7	578977	1994	ARM		68.51 mm²
Pentium Pro	5,500,000	1995	Intel	0.5 µm	307 mm²
AMD K5	4,300,000	1996	AMD	0.5 µm	251 mm²
Pentium II	7,500,000	1997	Intel	0.35 µm	195 mm²
AMD K6	8,800,000	1997	AMD	0.35 µm	162 mm²
Pentium III	9,500,000	1999	Intel	0.25 µm	128 mm²
AMD K6-III	21,300,000	1999	AMD	0.25 µm	118 mm²
AMD K7	22,000,000	1999	AMD	0.25 µm	184 mm²
Pentium 4	42,000,000	2000	Intel	180 nm	217 mm²
Atom	47,000,000	2008	Intel	45 nm	24 mm²
Barton	54,300,000	2003	AMD	130 nm	101 mm²

Processor	Transistor count	Date of introduction	Manufacturer	Process	Area
AMD K8	105,900,000	2003	AMD	130 nm	193 mm²
Itanium 2 McKinley	220,000,000	2002	Intel	180 nm	421 mm²
Cell	241,000,000	2006	Sony/IBM/Toshiba	90 nm	221 mm²
Core 2 Duo	291,000,000	2006	Intel	65 nm	143 mm²
Itanium 2 Madison 6M	410,000,000	2003	Intel	130 nm	374 mm²
AMD K10 quad-core 2M L3	463,000,000	2007	AMD	65 nm	283 mm²
ARM Cortex-A9	26,000,000	2007	ARM		
AMD K10 quad-core 6M L3	758,000,000	2008	AMD	45 nm	258 mm²
Itanium 2 with 9MB cache	592,000,000	2004	Intel	130 nm	432 mm²
Core i7	731,000,000	2008	Intel	45 nm	263 mm²
POWER6	789,000,000	2007	IBM	65 nm	341 mm²
Six-Core Opteron 2400	904,000,000	2009	AMD	45 nm	346 mm²
16-Core SPARC T3	1,000,000,000	2010	Sun/Oracle	40 nm	377 mm²
Quad-Core + GPU Core i7	1,160,000,000	2011	Intel	32 nm	216 mm²
Six-Core Core i7	1,170,000,000	2010	Intel	32 nm	240 mm²
8-core POWER7 32M L3	1,200,000,000	2010	IBM	45 nm	567 mm²
8-Core AMD Bulldozer	1,200,000,000	2012	AMD	32nm	315 mm²
Quad-Core + GPU AMD Trinity	1,303,000,000	2012	AMD	32 nm	246 mm²
Quad-core z196	1,400,000,000	2010	IBM	45 nm	512 mm²
Quad-Core + GPU Core i7	1,400,000,000	2012	Intel	22 nm	160 mm²
Dual-Core Itanium 2	1,700,000,000	2006	Intel	90 nm	596 mm²
Six-Core Xeon 7400	1,900,000,000	2008	Intel	45 nm	503 mm²
Quad-Core Itanium Tukwila	2,000,000,000	2010	Intel	65 nm	699 mm²
8-core POWER7+ 80M L3	2,100,000,000	2012	IBM	32 nm	567 mm²
Six-Core Core i7/8-Core Xeon E5	2,270,000,000	2011	Intel	32 nm	434 mm²
8-Core Xeon NehalemEX	2,300,000,000	2010	Intel	45 nm	684 mm²
10-Core Xeon Westmere-EX	2,600,000,000	2011	Intel	32 nm	512 mm²
Six-core zEC12	2,750,000,000	2012	IBM	32 nm	597 mm²
8-Core Itanium Poulson	3,100,000,000	2012	Intel	32 nm	544 mm²
62-Core Xeon Phi	5,000,000,000	2012	Intel	22 nm	
Xbox One Main SoC	5,000,000,000	2013	Microsoft		363 mm²

Generations of Processors

The concept of generations mainly comes after the release of the Core i series. The difference in processor micro-architecture is the main difference in processor generations.

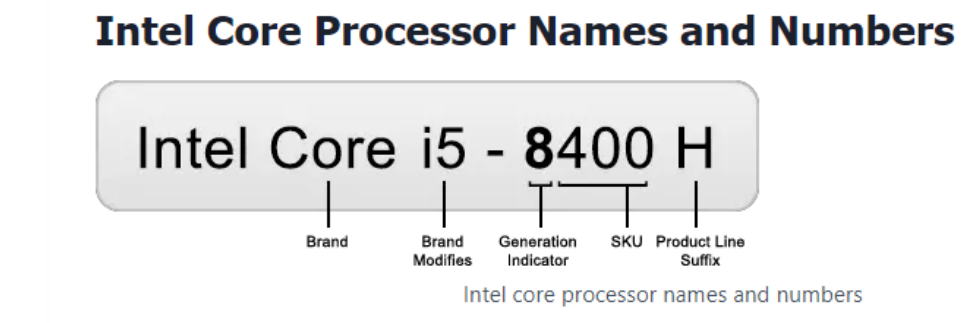

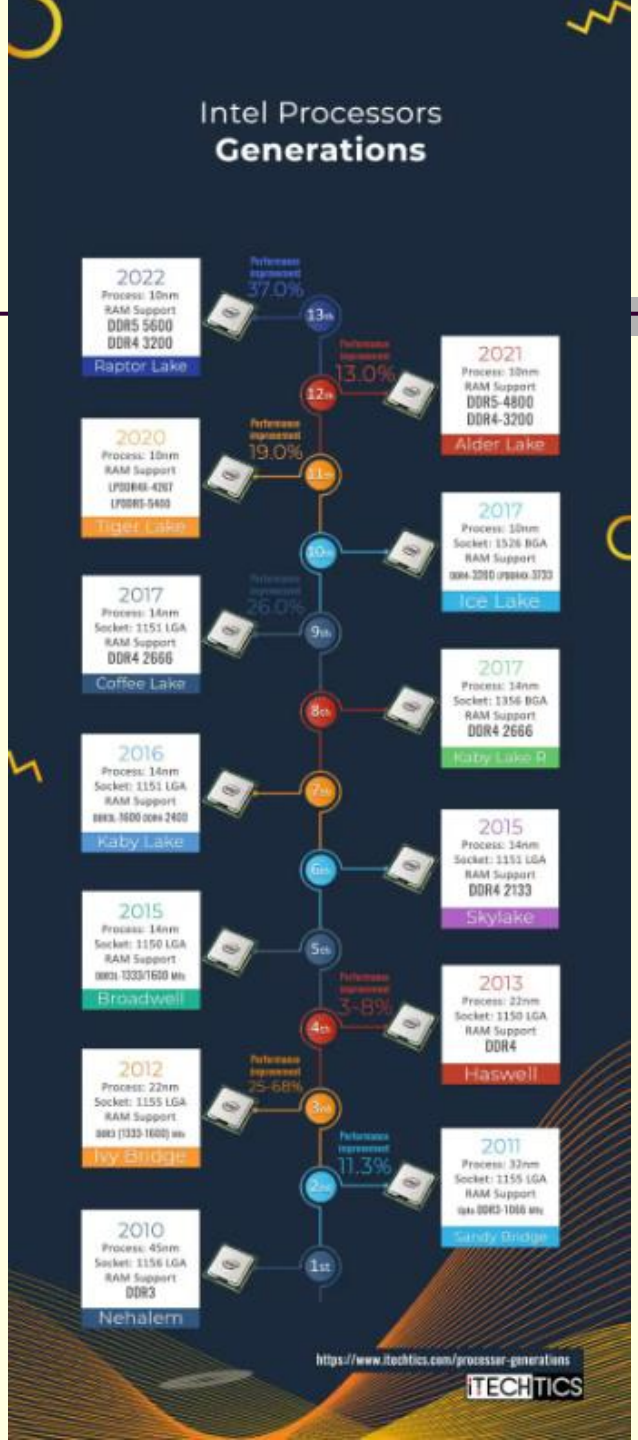

Microprocessor feature size and its effects

Year	Intel Chip	Feature Size	Operating Voltage	Notes
1971	4004	10 microns	15 V	1 micron = 10^{-6} m
1974	8080	6 microns	5 V	
1985	80386	1.5 microns	5 V	
1997	Pentium II	350 nm	5 V	1 nm = 10^{-9} m
1999	Pentium III	250 nm	2 V	Power density issues
2006	Core Solo	65 nm	1.5 V?	Quantum tunneling
2007	Dual & Quad	45 nm	1.2 V	
2009		32 nm	0.85 V	
2012		22 nm	0.8 V	
2014		14 nm	0.7 V	Core M processors

Moore's Law

- 1965: Gordon Moore plotted transistor on each chip
  - Fit straight line on semilog scale
  - Transistor count doubling every 18 months

Integration Levels

SSI: 10 gates

MSI: 1000 gates

LSI: 10,000 gates

VLSI: > 10k gates

S.No.	Processor	Year	No. of Transistor
1	Intel 4004	1971	2300
2	Intel 8085	1976	6500
3	Intel 80286	1982	134 thousand
4	Intel 80486	1989	11.8 lakhs
5	Intel Pentium pro	1995	55 lakhs
6	Intel Pentium III	1999	95 lakhs
7	Intel Pentium IV	2000	420 lakhs
8	Intel core 2 duo	2006	291 million
9	Intel core i7 (I generation)	2008	731 million
10	Intel core i7 (II generation)	2011	1.16 billion
11	Intel core i7 (III generation)	2012	1.4 billion
12	Intel core i7 (IV generation)	2013	1.4 billion
13	Intel core i7 (V generation)	2015	1.9 billion
14	AMD Ryzen	2017	4.8 billion

And Now… Intel Microprocessors

- Transistor counts have doubled every 26 months since the invention of the 4004.

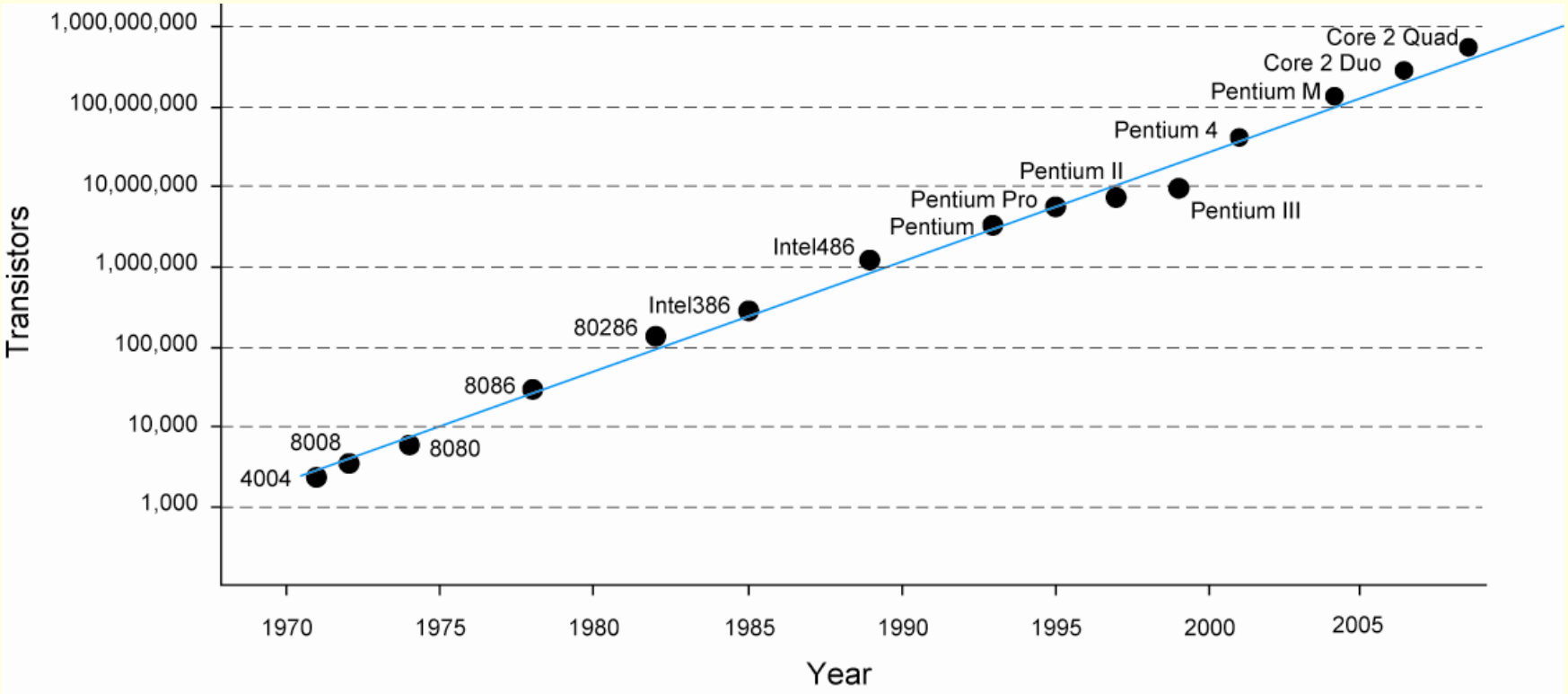

Feature Size

- Minimum feature size shrinking 30% every 2-3 years

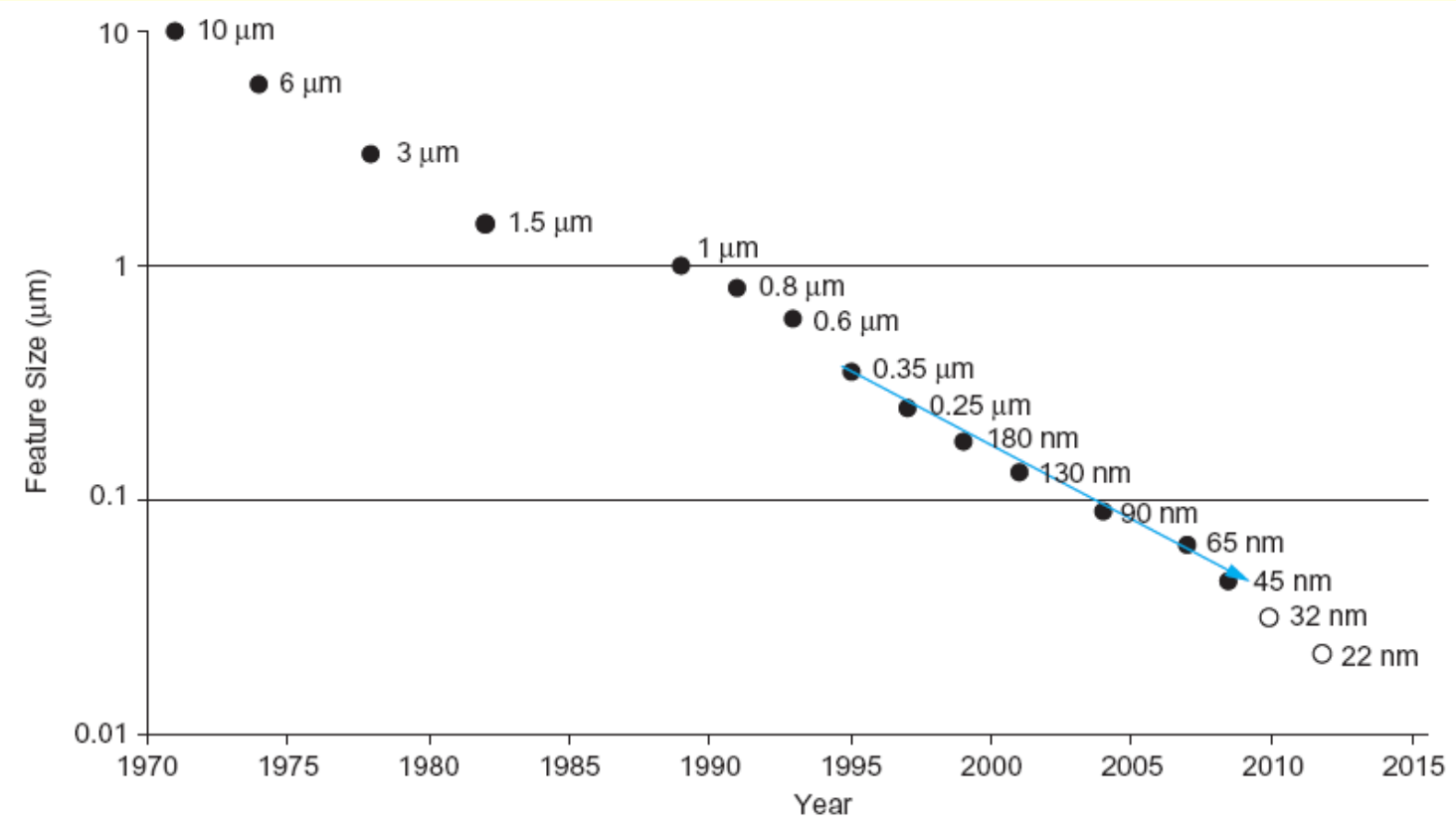

Corollaries

- Many other factors grow exponentially
  - Ex: clock frequency, processor performance

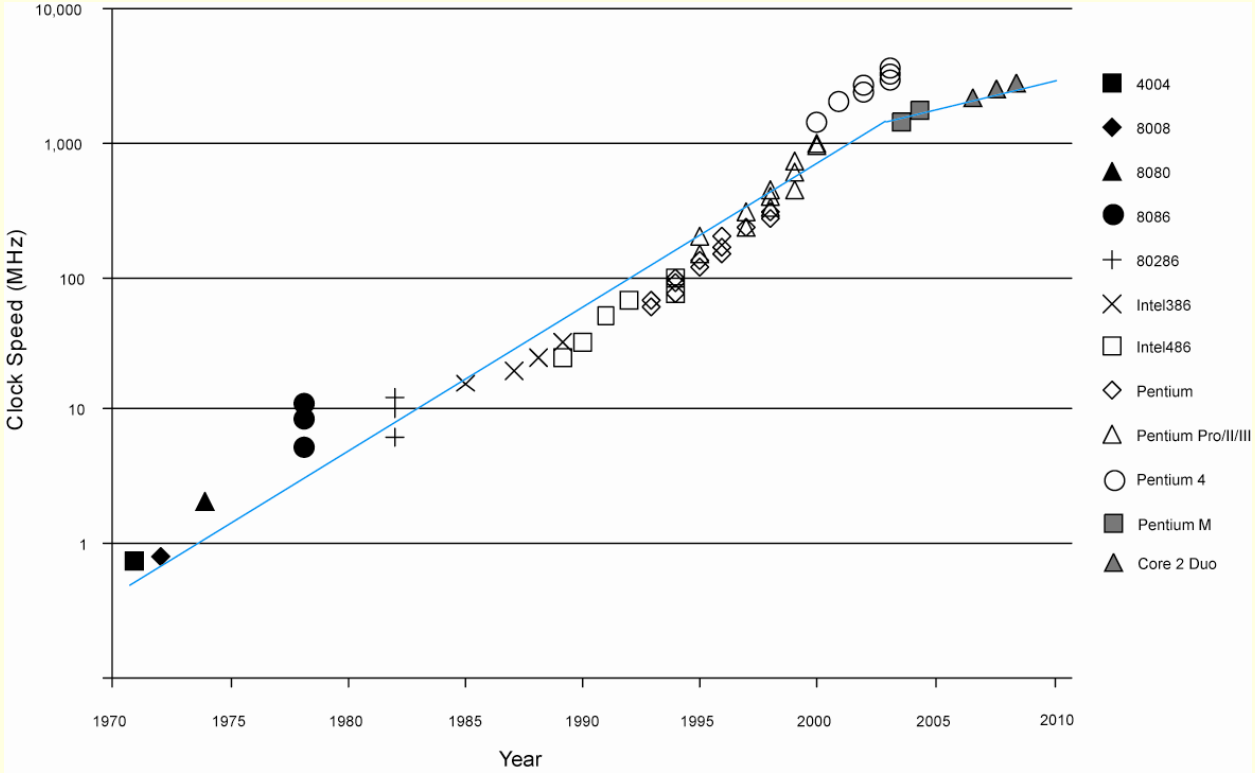

Power density

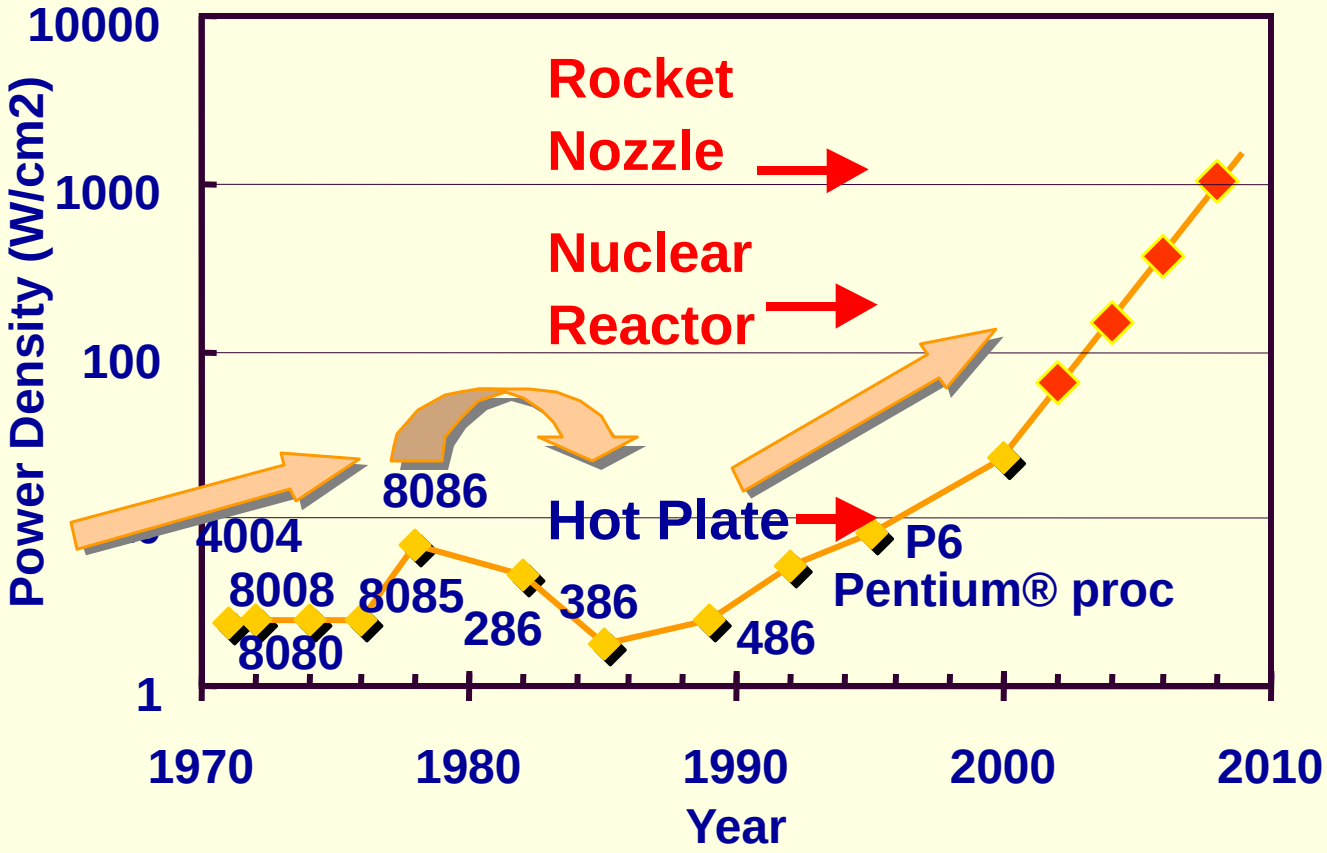

Power density too high to keep junctions at low temp

Courtesy, Intel

Growth Rate

- In 1958, first integrated circuit flip-flop with two transistors
- In 2008, Intel's Itanium microprocessor contained more than 2 billion transistors & 16 Gb Flash memory contained more than 4 billion transistors.
- 53% compound annual growth rate over 50 years
  - No other technology has grown so fast so long
- Driven by miniaturization of transistors
  - Smaller is cheaper, faster, lower in power!
  - Revolutionary effects on society

Annual Sales

- >10^{19} transistors manufactured in 2008
  - 1 billion for every human on the planet

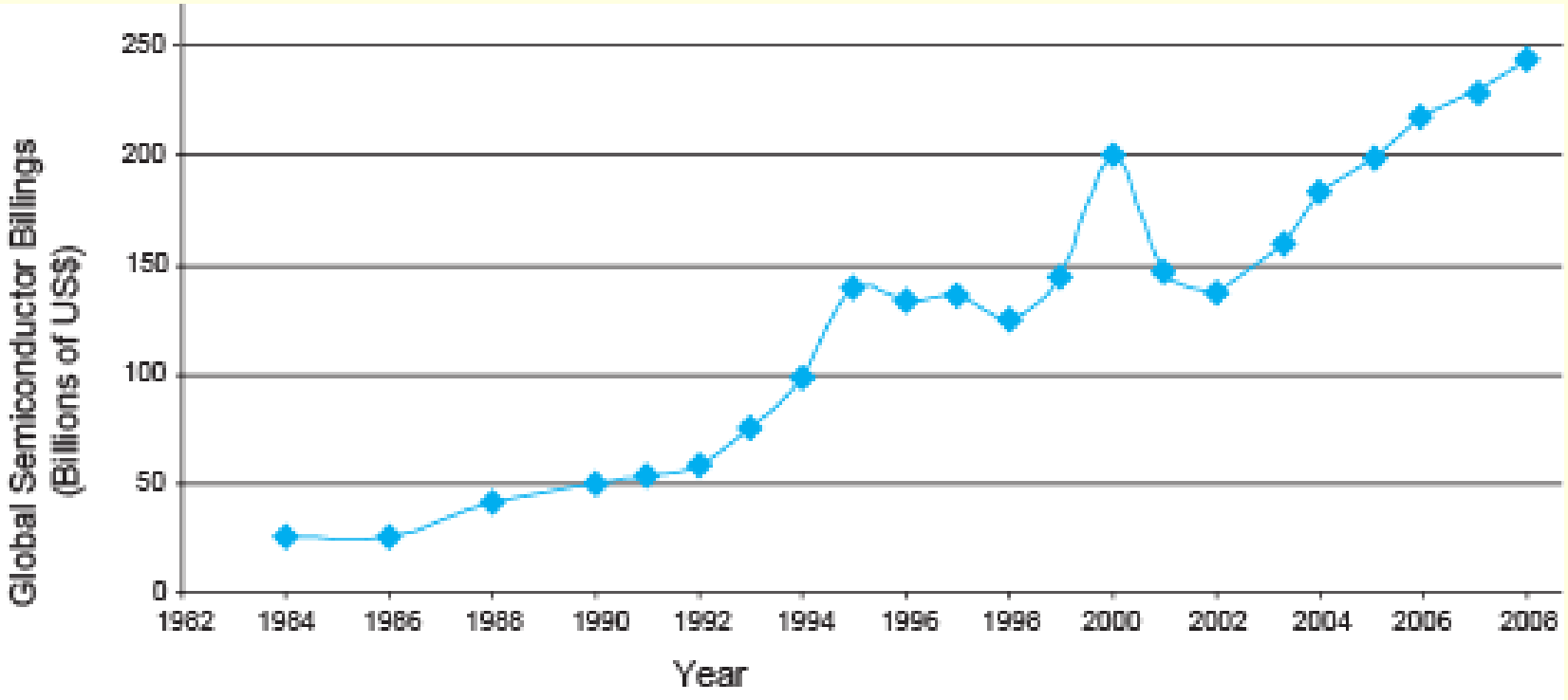

Silicon Semiconductors

- Modern electronic chips are built mostly on silicon substrates
- Silicon is a Group IV semiconducting material
- Crystal lattice: covalent bonds hold each atom to four neighbours

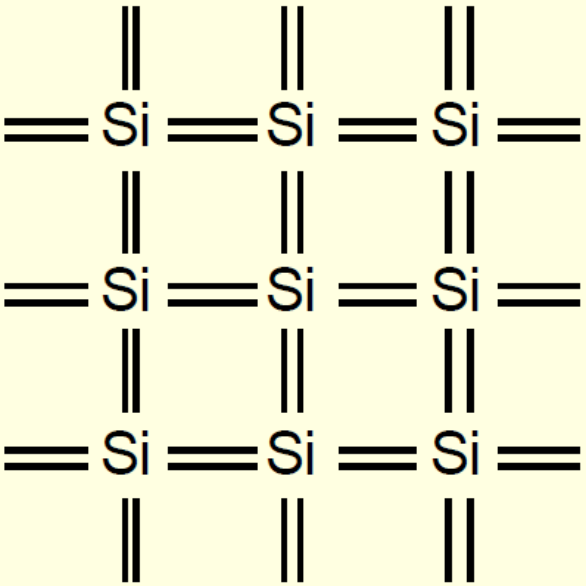

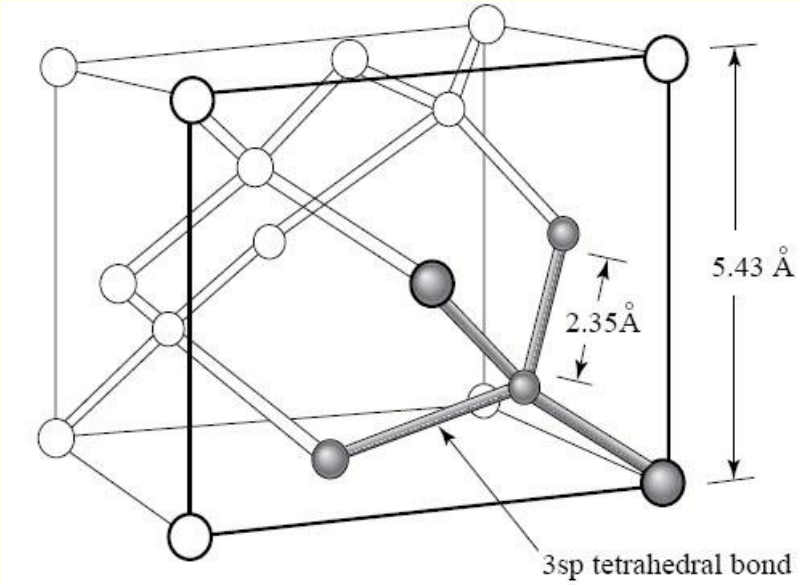

http://onlineheavytheory.net/silicon.html

Dopants

- Silicon is a semiconductor at room temperature
- Pure silicon has few free carriers and conducts poorly
- Adding dopants increases the conductivity drastically
- Dopant from Group V (e.g. As, P): extra electron (n-type)
- Dopant from Group III (e.g. B, Al): missing electron, called hole (p-type)

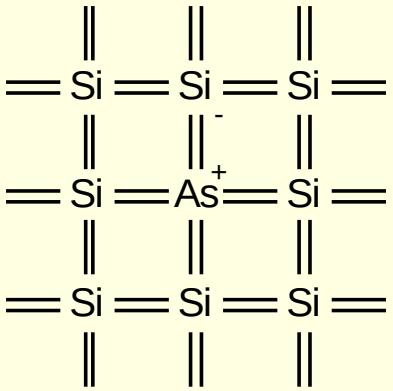

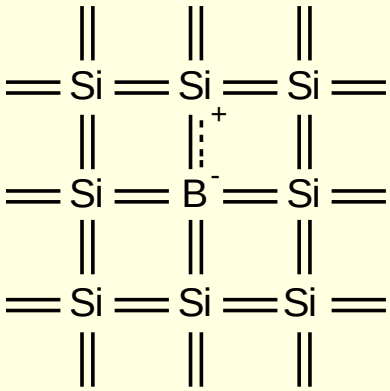

p-n Junctions

- First semiconductor (two terminal) devices
- A junction between p-type and n-type semiconductor forms a diode.
- Current flows only in one direction

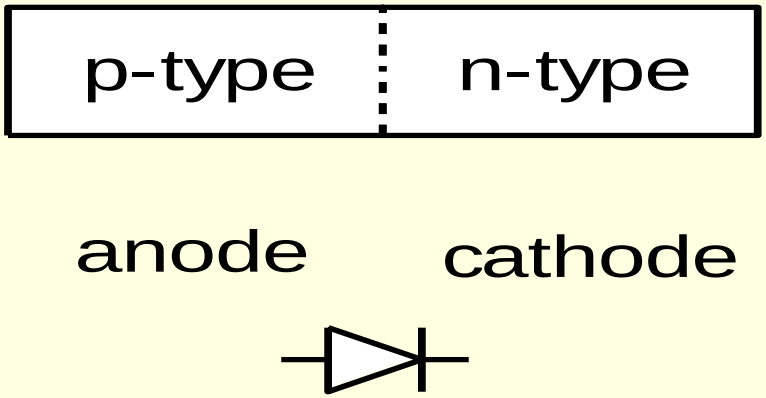

Transistor Types

- Bipolar transistors
  - npn or pnp silicon structure
  - Small current into very thin base layer controls large currents between emitter and collector
  - Base currents limit integration density
- Metal Oxide Semiconductor Field Effect Transistors
  - nMOS and pMOS MOSFETS
  - Voltage applied to insulated gate controls current between source and drain
  - Low power allows very high integration
  - First patent in the ’20s in USA and Germany
  - Not widely used until the ’60s or ’70s

Introduction to MOS Transistor

- An ON transistor passes a finite amount of current
  - Depends on terminal voltages
  - Derive current-voltage (I-V) relationships
- Transistor gate, source, drain all have capacitance
  - Capacitance and current determine speed

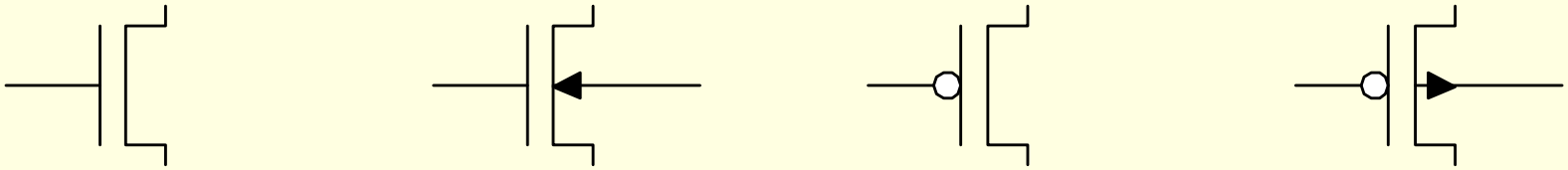

MOS Transistors

- Four terminal device: gate, source, drain, body
- Gate–oxide–body stack looks like a capacitor
  - Gate and body are conductors (body is also called the substrate/bulk)
  - SiO_2 (oxide) is a “good” insulator (separates the gate from the body
  - Called metal–oxide–semiconductor (MOS) capacitor, even though gate is mostly made of poly-crystalline silicon (polysilicon)

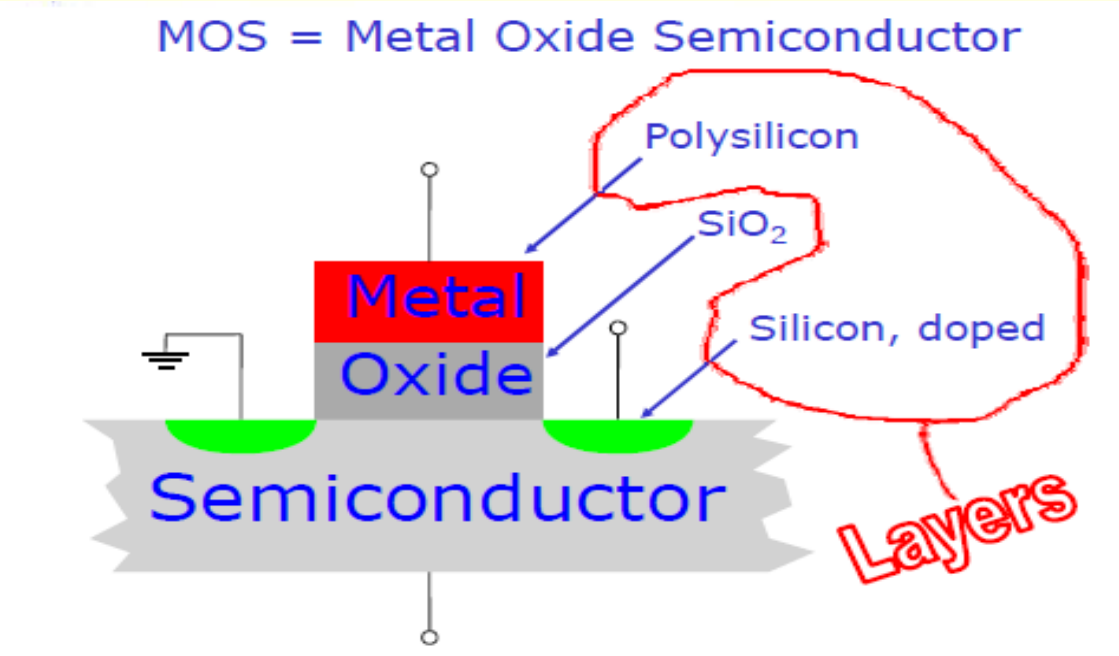

MOS Transistors...Types

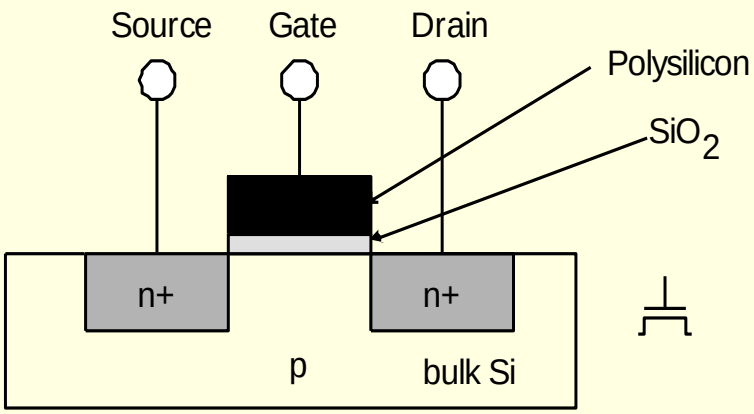

NMOS

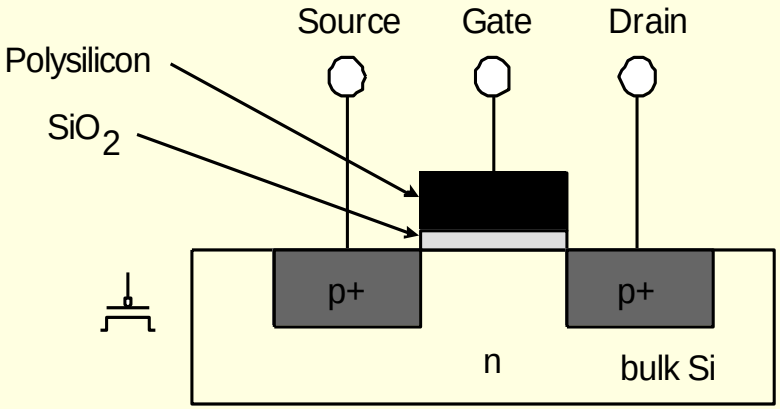

PMOS

NMOS Operation

- Body is commonly tied to ground (0 V)
- Drain is at a higher voltage than Source
- When the gate is at a low voltage:
  - P-type body is at low voltage
  - Source-body and drain-body “diodes” are OFF
  - No current flows, transistor is OFF

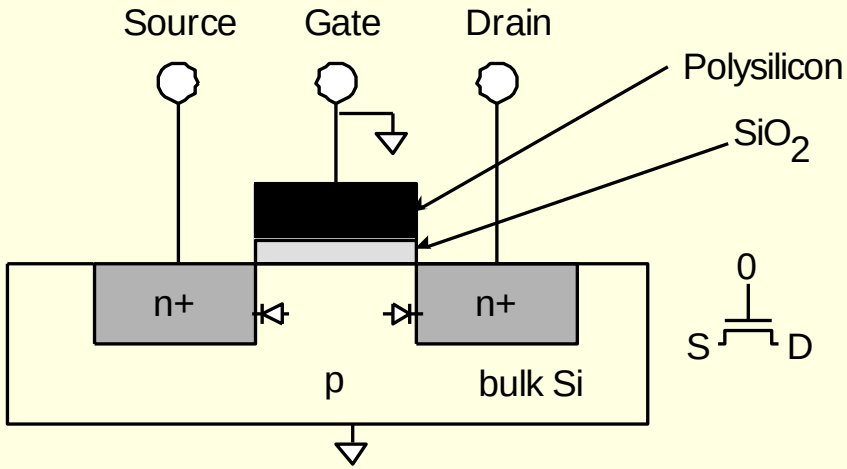

NMOS Operation Cont.

- When the gate is at a high voltage: Positive charge on gate of MOS capacitor
  - Negative charge is attracted to body under the gate
  - Inverts a channel under gate to “n-type” (N-channel, hence called the NMOS) if the gate voltage is above a threshold voltage (V_T)
  - Now current can flow through “n-type” silicon from source through channel to drain, transistor is ON

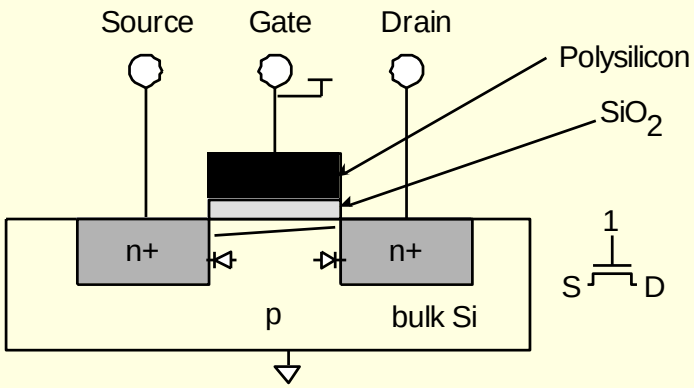

Terminal Voltages

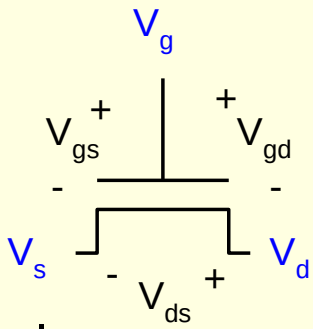

- Mode of operation depends on V_g, V_d, V_s
  - $V_{gs} = V_g – V_s$
  - $V_{gd} = V_g – V_d$
  - $V_{ds} = V_d – V_s = V_{gs} - V_{gd}$
- Source and drain are symmetric diffusion terminals
  - However, $V_{ds} \geq 0$
- NMOS <u>body</u> is grounded. First assume <u>source</u> may be grounded or may be at a voltage above ground.
- Three regions of operation
  - *Cutoff*
  - *Linear*
  - *Saturation*

NMOS Cutoff (subthreshold region)

- No channel, if $V_{gs} = 0$
- $I_{ds} = 0$

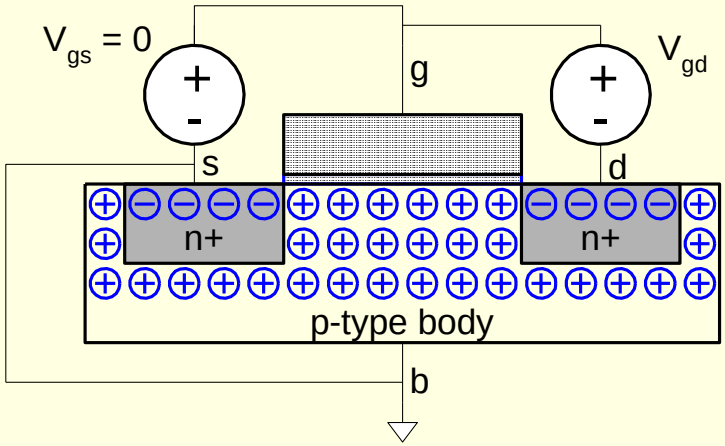

NMOS Linear

(linear/resistive/triode/nonsaturated/unsaturated)

- Channel forms if $V_{gs} > V_t$
- No Current if $V_{ds} = 0$
- $V_{gs}=V_{gd}$

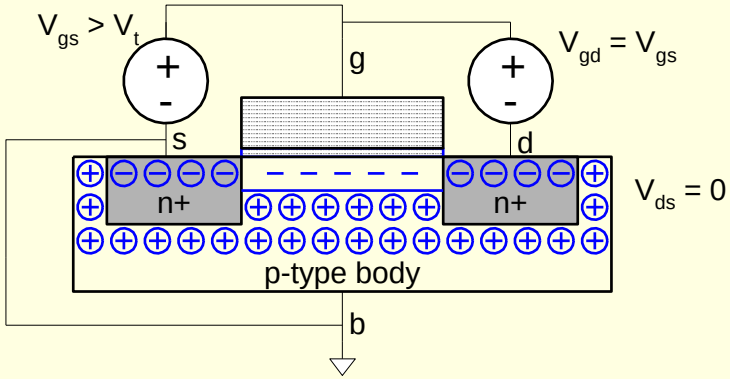

- **<u>Linear Region:</u>**
- If $V_{ds} > 0$, Current flows from d to s (e^- from s to d)
- I_{ds} increases linearly with V_{ds} if $0 < V_{ds} < V_{gs} – V_t$
- Similar to linear resistor
- $V_{gs}>V_{gd}> V_t$

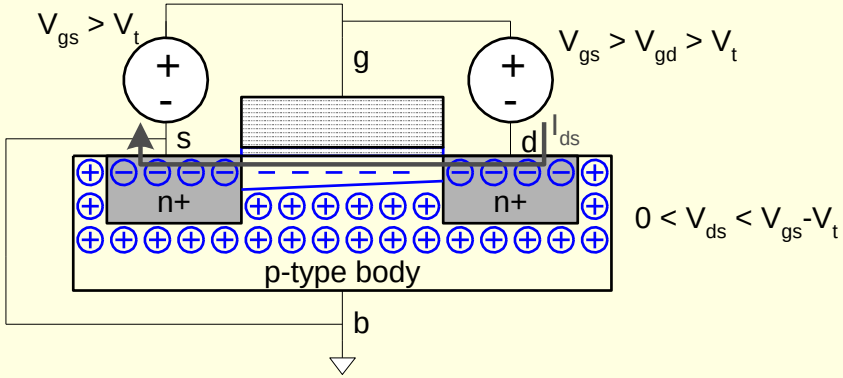

NMOS Saturation

- if $V_{gs} > V_t$
- Channel pinches off if $V_{ds} > V_{gs} – V_t$
- I_{ds} “independent” of V_{ds}, i.e., current saturates
- Similar to current source
- $V_{gd} < V_t$

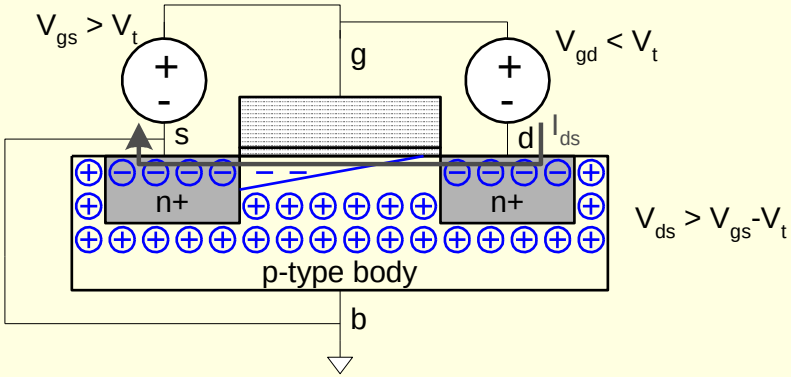

NMOS I-V Summary

- *Shockley* 1st order transistor models (valid for Large channel devices only)

$$I_{ds} = \begin{cases} 0 & V_{gs} < V_t & \text{cutoff} \\ \beta\left(V_{gs} - V_t - V_{ds}/2\right)V_{ds} & V_{ds} < V_{dsat} & \text{linear} \\ \frac{\beta}{2}\left(V_{gs} - V_t\right)^2 & V_{ds} > V_{dsat} & \text{saturation} \end{cases}$$

PMOS I-V

- All dopings and voltages are inverted for PMOS
- Mobility μ_p is determined by holes
  - Typically 2-3x lower than that of electrons μ_n
  - 120 $cm^2/V*s$ in AMI 0.6 μm process
- Thus PMOS must be wider to provide same current
  - In this class, assume $\mu_n / \mu_p = 2$

PMOS Transistor

- Similar, but doping and voltages reversed
  - Body tied to high voltage (V_{DD})
  - Drain is at a lower voltage than the Source
  - Gate low: transistor ON
  - Gate high: transistor OFF
  - Bubble indicates inverted behavior

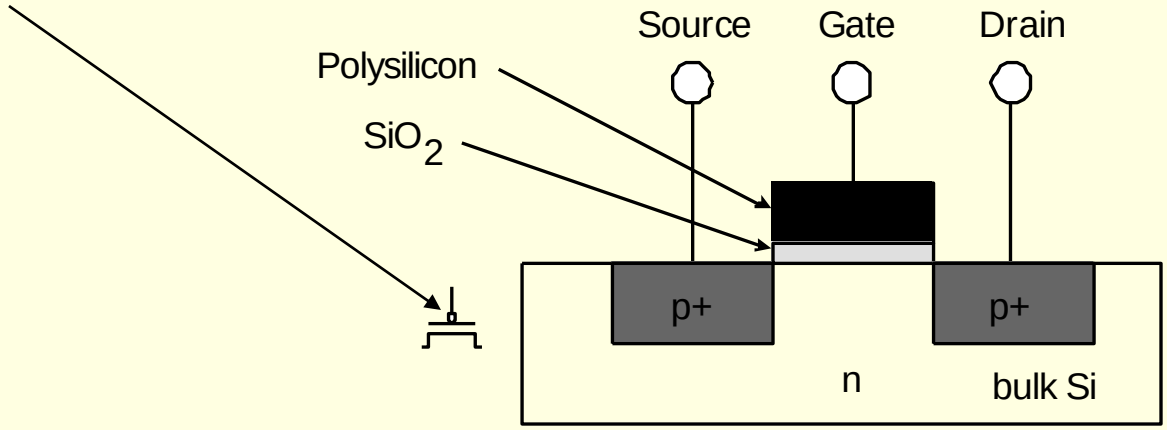

Power Supply Voltage

- GND = 0 V
- In 1980's, V_{DD} = 5V
- V_{DD} has decreased in modern processes
  - High V_{DD} would damage modern tiny transistors
  - Lower V_{DD} saves power
- V_{DD} = 3.3, 2.5, 1.8, 1.5, 1.2, 1.0

Microprocessor feature size and its effects

Year	Intel Chip	Feature Size	Operating Voltage	Notes
1971	4004	10 microns	15 V	1 micron = 10^{-6} m
1974	8080	6 microns	5 V	
1985	80386	1.5 microns	5 V	
1997	Pentium II	350 nm	5 V	1 nm = 10^{-9} m
1999	Pentium III	250 nm	2 V	Power density issues
2006	Core Solo	65 nm	1.5 V?	Quantum tunneling
2007	Dual & Quad	45 nm	1.2 V	
2009		32 nm	0.85 V	
2012		22 nm	0.8 V	
2014		14 nm	0.7 V	Core M processors

Transistors as Switches

- In digital circuits, MOS transistors are electrically controlled switches
- Voltage at gate controls path from source to drain

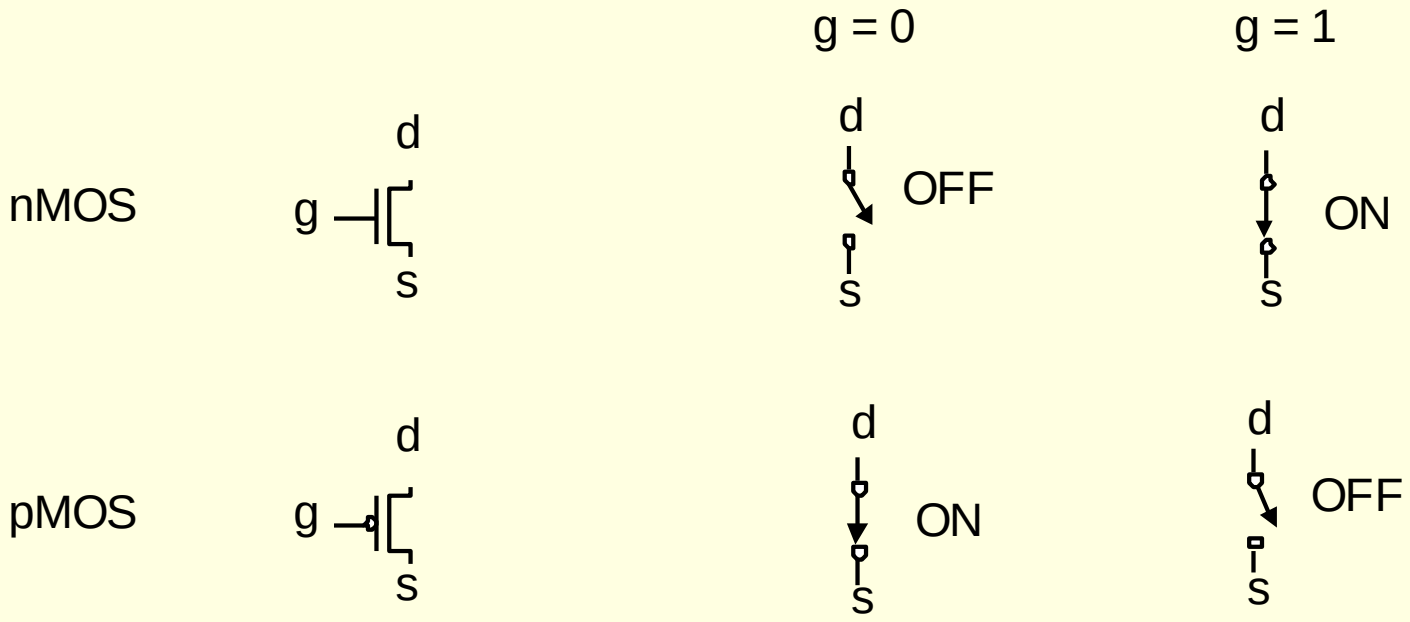

NMOS Pass Transistors

- We have assumed source is initially at V_S=0
- What if $V_{gs} < V_t$
  - current will not flow & transistor is not passing V_{DD}
- What if $V_{gs} > V_t$
  - current flows & transistor is passing V_{DD}
- Let $V_g = V_{DD}$
  - Now if $V_s > V_{DD}-V_t$, $V_{gs} < V_t$
  - Hence transistor would turn itself off
- NMOS pass transistors pull-up no higher than $V_{DD}-V_{tn}$
  - Called a degraded "1"
  - Approach degraded value slowly (low I_{ds})
- PMOS pass transistors pull-down no lower than V_{tp}
  - Called a degraded "0"

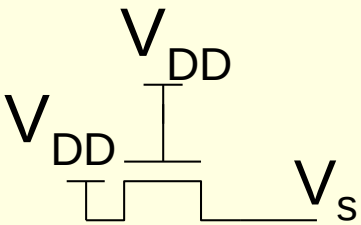

Pass Transistor Ckts

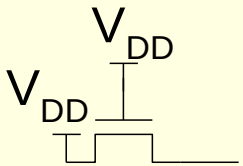

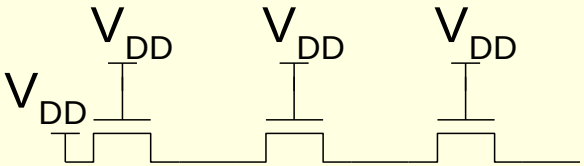

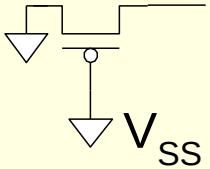

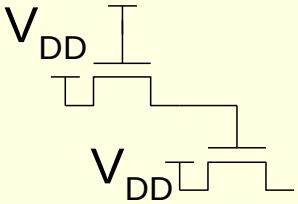

Pass Transistor Ckts

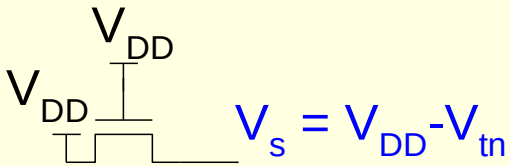

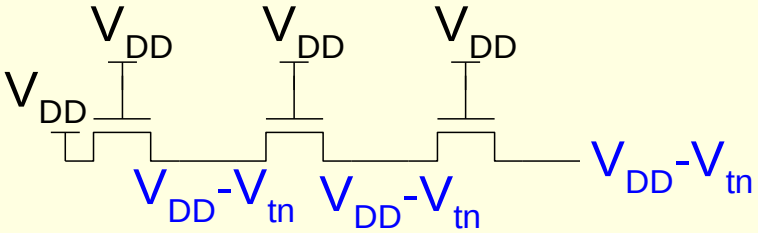

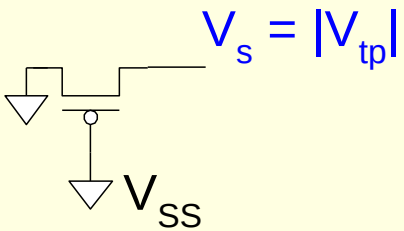

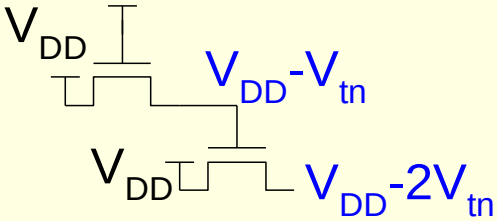

Circuit Families

- Static CMOS Logic
  - Compound Gates
  - Bubble Pushing
- Pass Transistor Logic
- Tristate Inverter
- Dynamic Logic
- Rationed Logic

CMOS Inverter

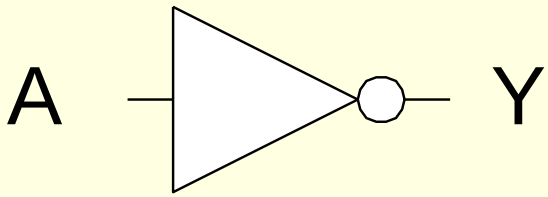

A	Y
0	
1	

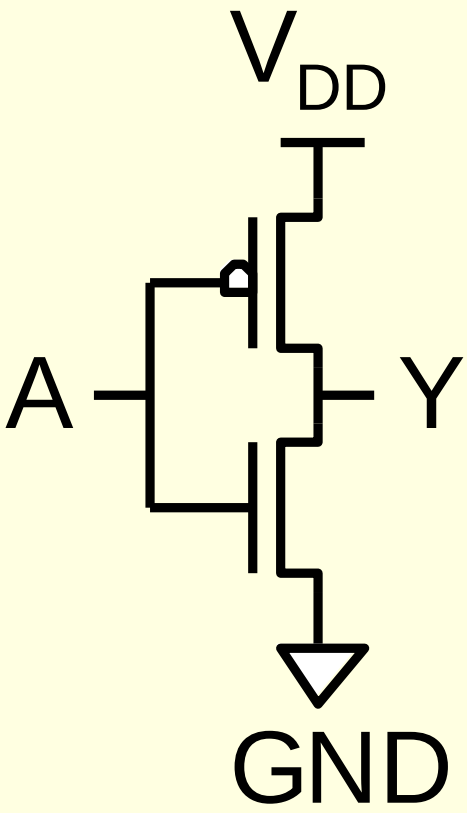

CMOS NAND Gate

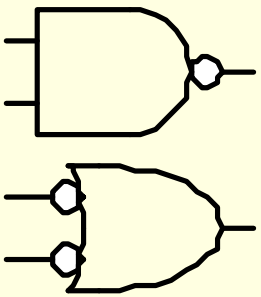

A	B	Y
0	0	
0	1	
1	0	
1	1	

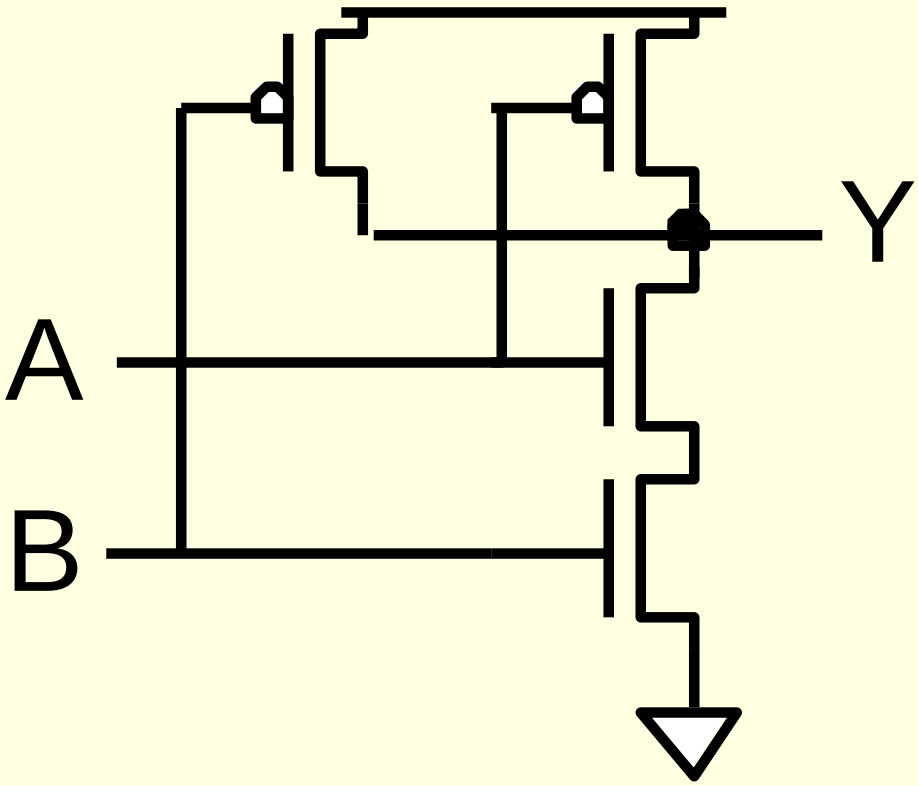

CMOS NOR Gate

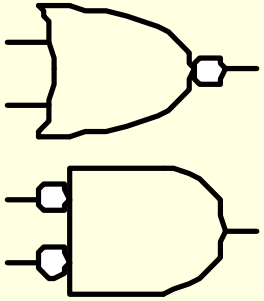

A	B	Y
0	0	1
0	1	0
1	0	0
1	1	0

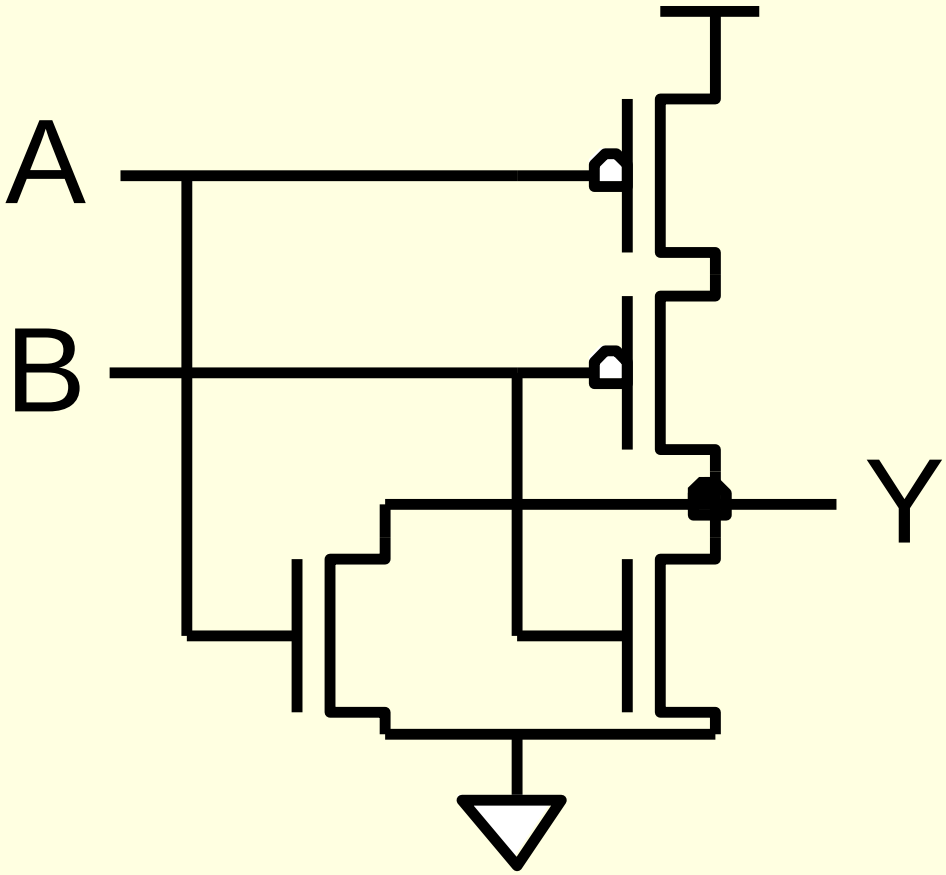

3-input NAND Gate

- Y is pulled low if ALL inputs are 1
- Y is pulled high if ANY input is 0

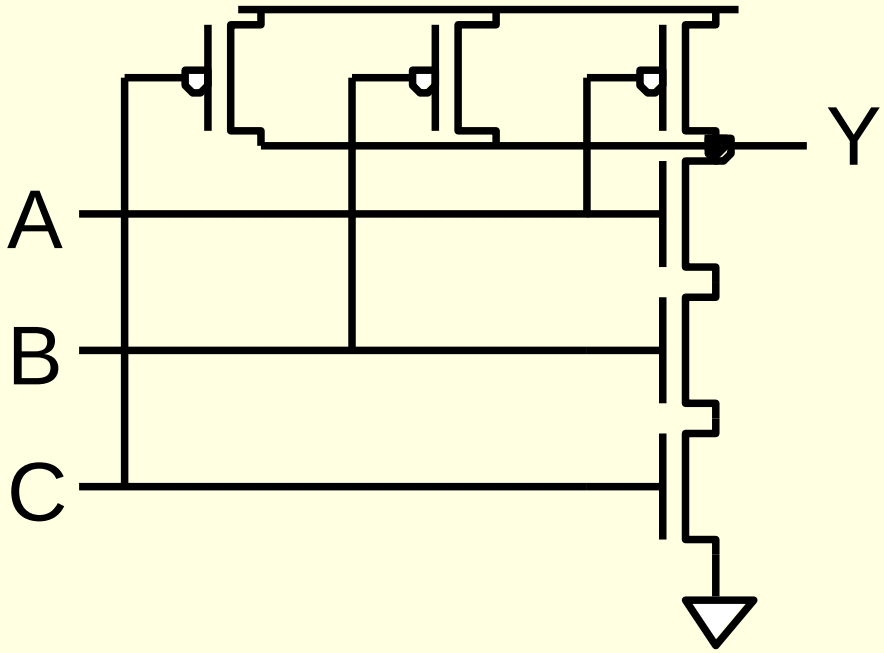

CMOS Gate Design

- A 4-input CMOS NOR gate

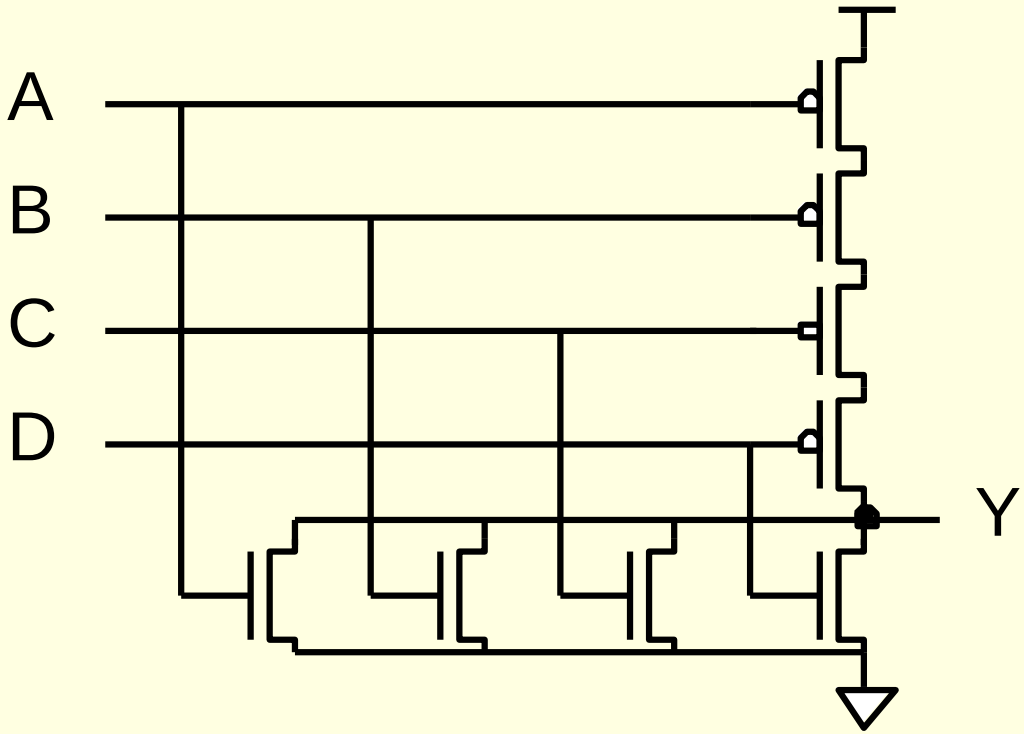

Complementary CMOS

- Complementary CMOS logic gates
  - nMOS *pull-down network*
  - pMOS *pull-up network*
  - a.k.a. static CMOS
- *Fully restored logic gate*

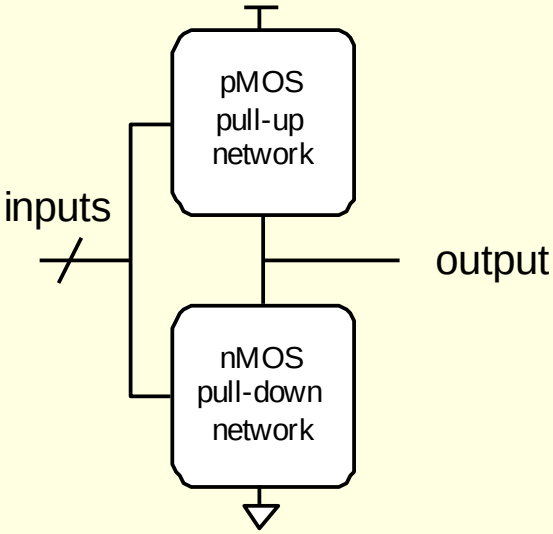

	Pull-up OFF	Pull-up ON
Pull-down OFF	Z (float)	1
Pull-down ON	0	X (crowbar)

Static CMOS Logic

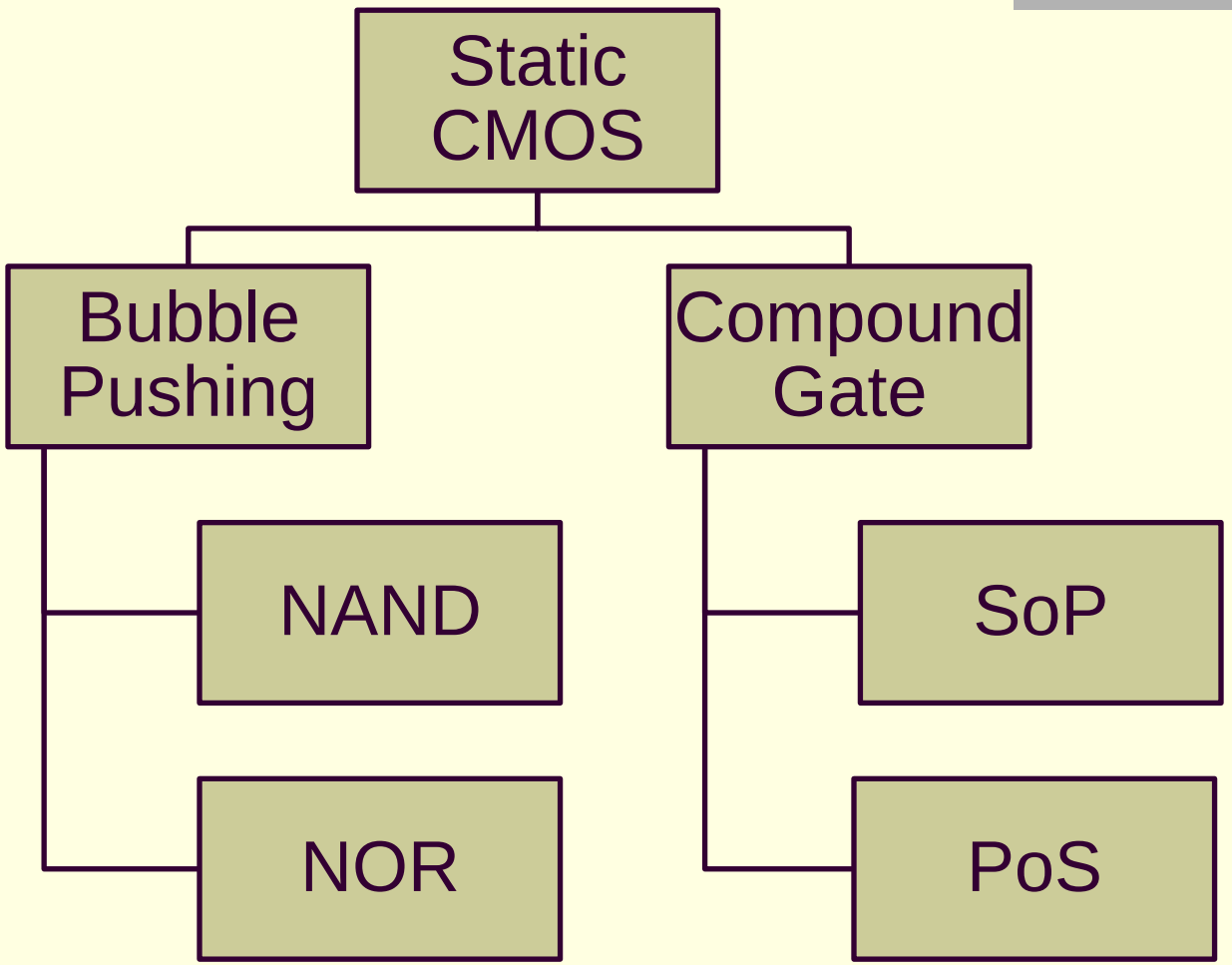

Conduction Complement

- Complementary CMOS gates always produce 0 or 1
- Ex: NAND gate
  - Series nMOS: Y=0 when both inputs are 1
  - Thus Y=1 when either input is 0
  - Requires parallel pMOS

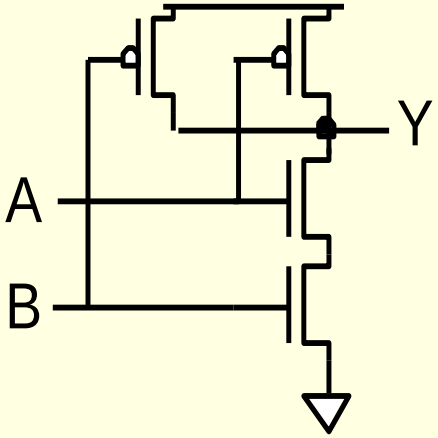

- Rule of *Conduction Complements*
  - Pull-up network is complement of pull-down
  - Parallel -> series, series -> parallel

Compound Gates

- *Compound gates* can do any inverting function
- Ex: AND-OR-INV (AOI22) → $Y = \overline{(A \bullet B) + (C \bullet D)}$
- Performs NOR of a pair of 2-input ANDs

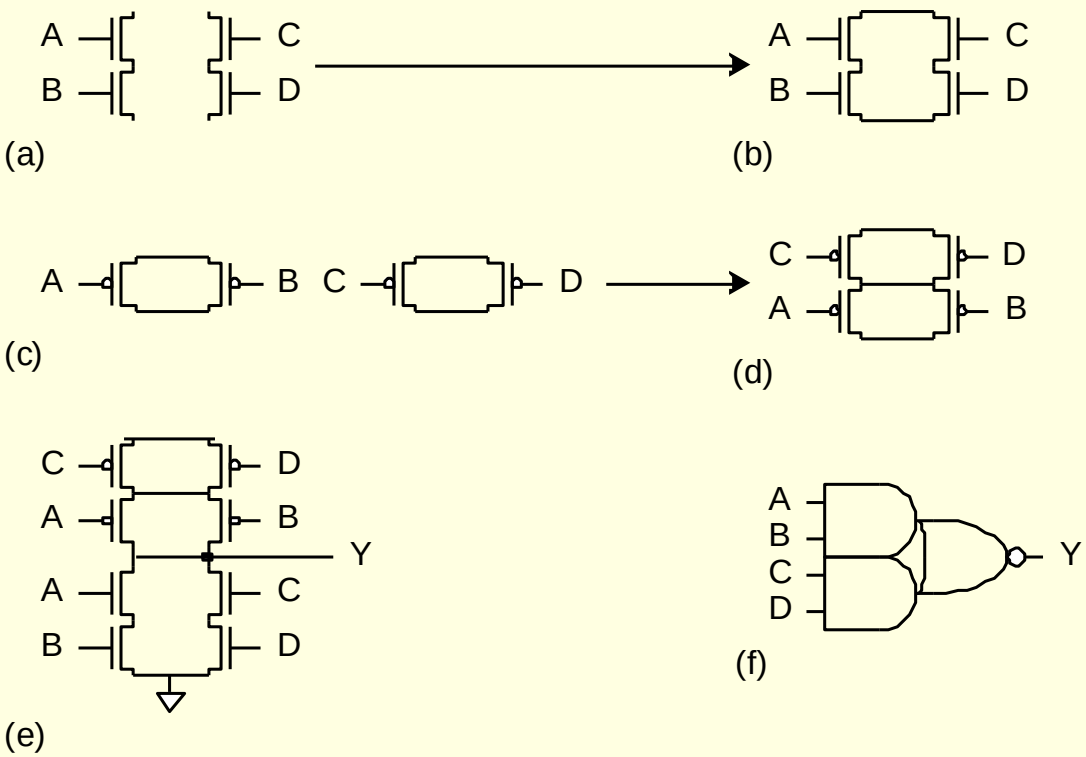

Example: OAI

$$Y = \overline{(A + B + C) \bullet D}$$

- OR-AND-INVERT (OAI31)

Example: OAI

$$Y = \overline{(A + B + C) \bullet D}$$

- OR-AND-INVERT (OAI31)

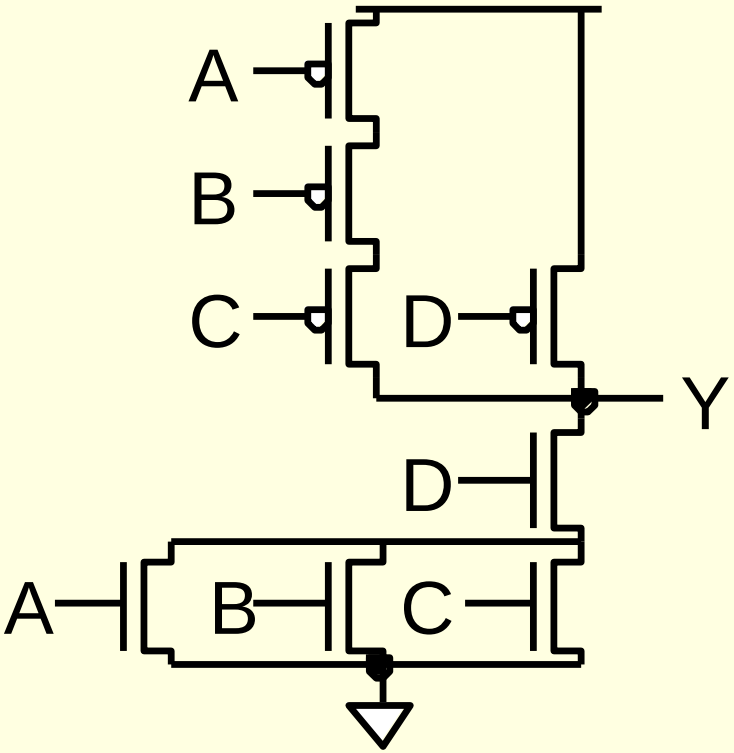

Writing Boolean Expression

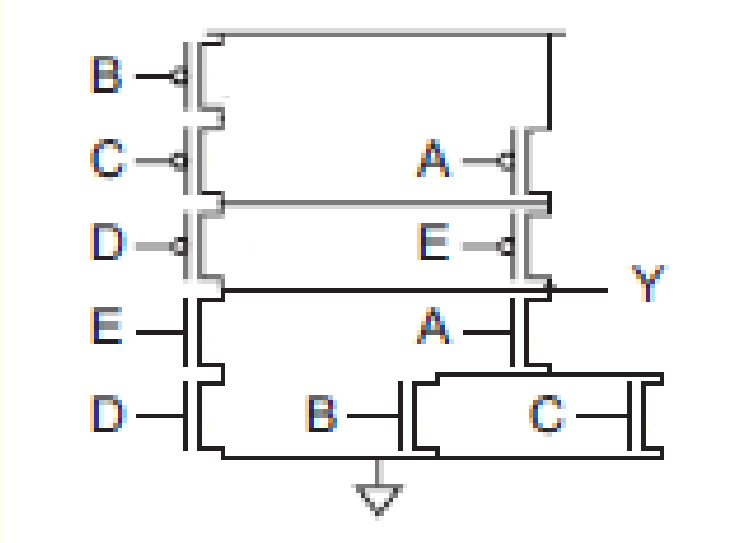

Complex AOI

$$Y = \overline{A \cdot (B+C) + D \cdot E}$$

Bubbling Pushing

- **<u>NAND only Implementation</u>**

$$Y = \overline{(A \bullet B) + (C \bullet D)}$$

- **<u>NOR only Implementation</u>**

$$Y = \overline{(A \bullet B) + (C \bullet D)}$$

Pass Transistors

- Transistors can be used as switches

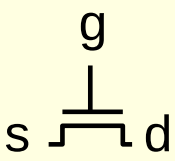

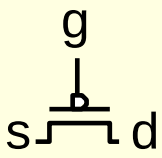

Pass Transistors

- Transistors can be used as switches

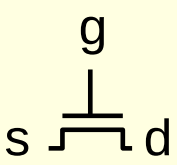

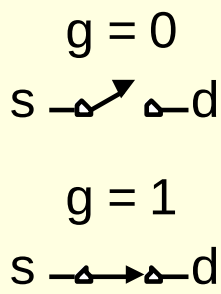

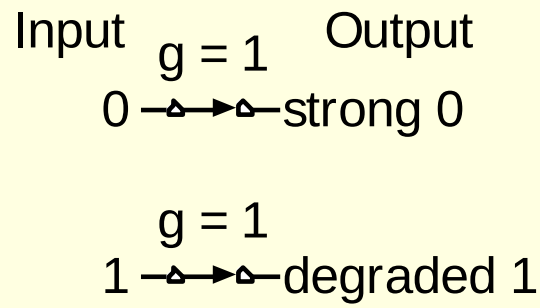

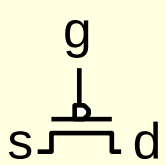

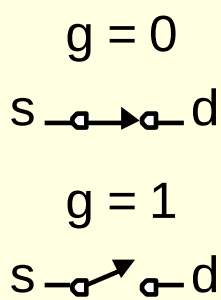

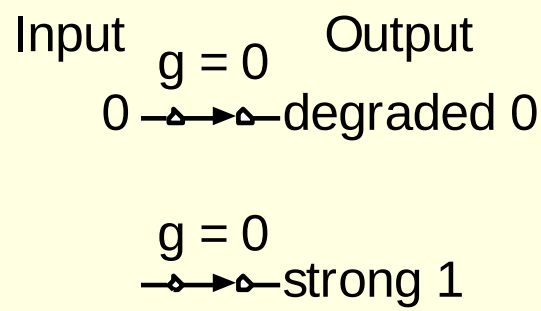

Signal Strength

- *Strength* of signal
  - How close it approximates ideal voltage source
- V_{DD} and GND rails are strongest 1 and 0
- nMOS pass strong 0
  - But degraded or weak 1
- pMOS pass strong 1
  - But degraded or weak 0
- Thus NMOS are best for pull-down network
- Thus PMOS are best for pull-up network

Transmission/Pass Gate

- Pass transistors produce degraded outputs
- *Transmission gates* pass both 0 and 1 well
- Double rail logic

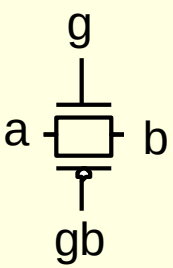

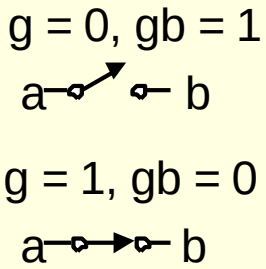

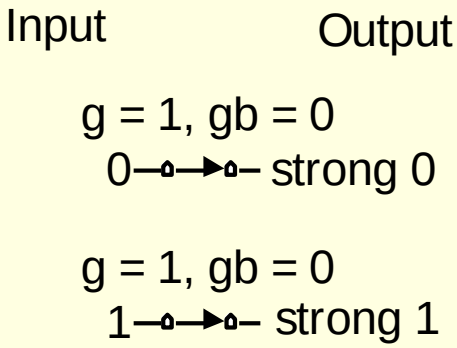

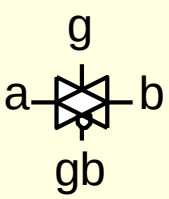

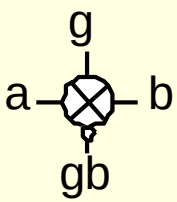

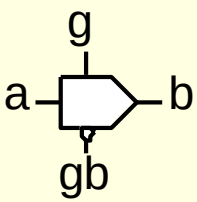

Tristate Buffer

- *Tristate buffer* produces Z when not enabled

EN	A	Y
0	0	Z
0	1	Z
1	0	0
1	1	1

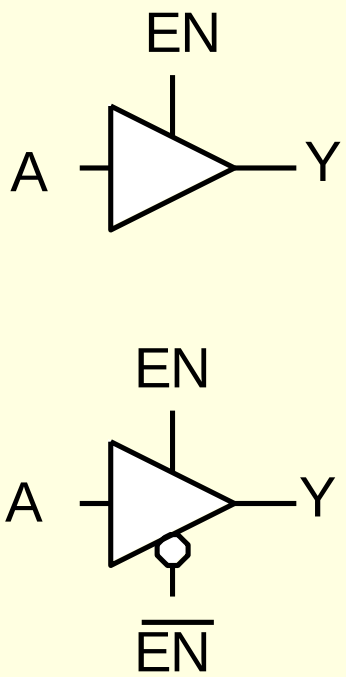

Nonrestoring Tristate

- Transmission gate acts as tristate buffer
  - Only two transistors
  - But *nonrestoring*
    - Noise on A is passed on to Y (after several stages, the noise may degrade the signal beyond recognition)

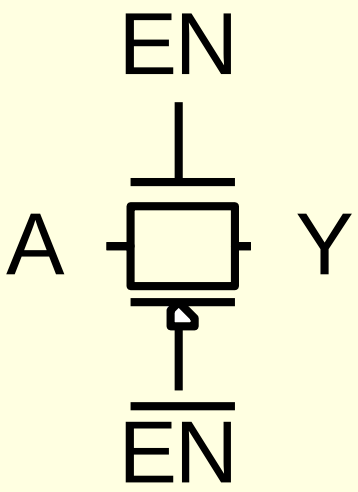

Tristate Inverter

- Tristate inverter produces restored output
- Note however the Tristate Inverter
  - ignores the conduction complement rule because we want a Z output

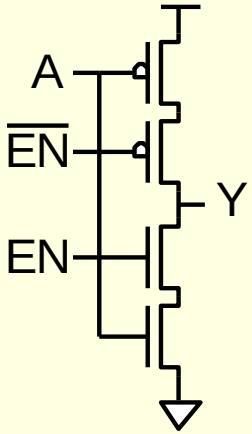

Tristate Inverter

- Tristate inverter produces restored output
- Note however the Tristate Inverter
  - ignores the conduction complement rule because we want a Z output

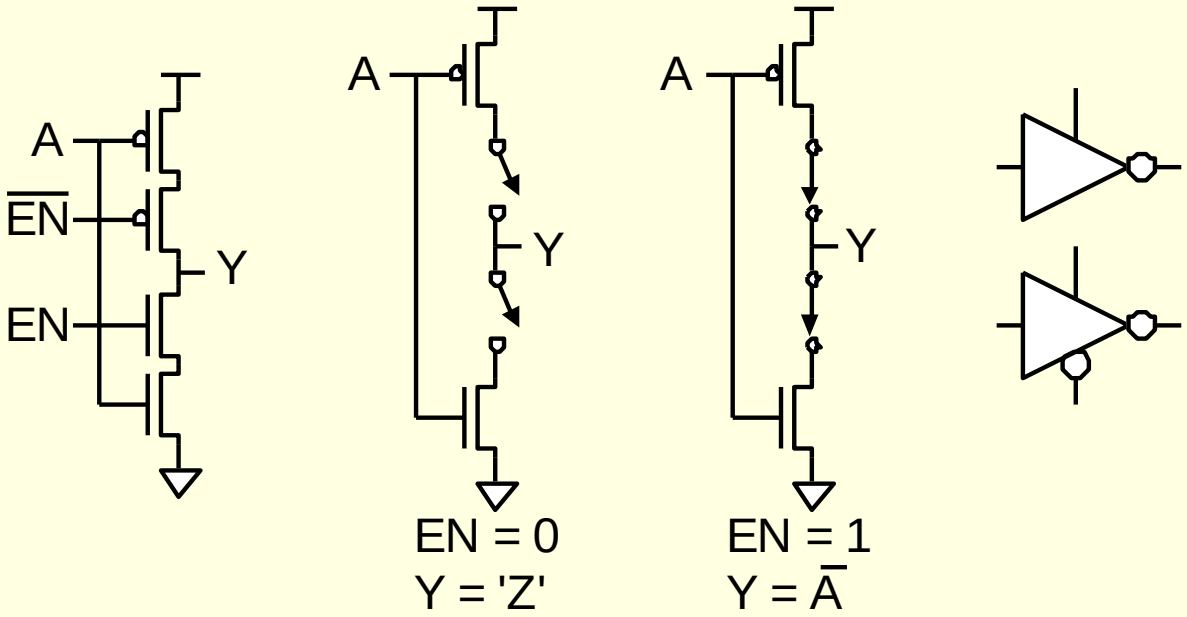

Multiplexers

- 2:1 *multiplexer* chooses between two inputs

S	D1	D0	Y
0	X	0	
0	X	1	
1	0	X	
1	1	X	

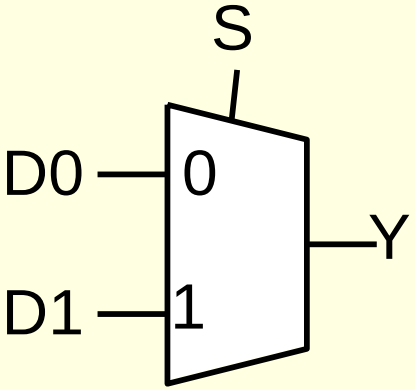

Multiplexers

- 2:1 *multiplexer* chooses between two inputs

S	D1	D0	Y
0	X	0	0
0	X	1	1
1	0	X	0
1	1	X	1

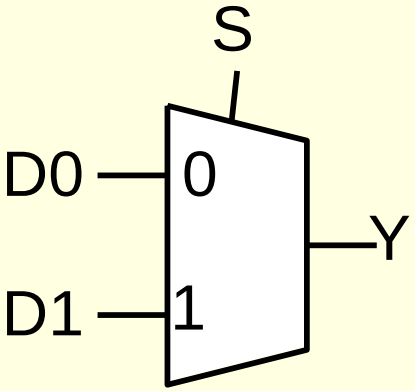

Gate-Level Mux Design

- $Y = S_1 \overline{S_0} (D_3 + D_2) + S_1 S_0 (D_1 + D_0)$
- How many transistors are needed?

Gate-Level Mux Design

- $Y = S \cdot D_1 + \overline{S} \cdot D_0$ (complementary)
- How many transistors are needed? 20

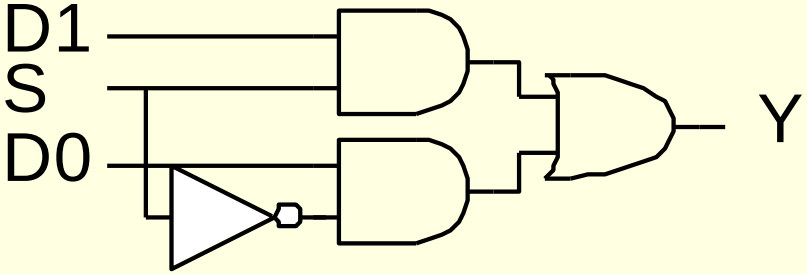

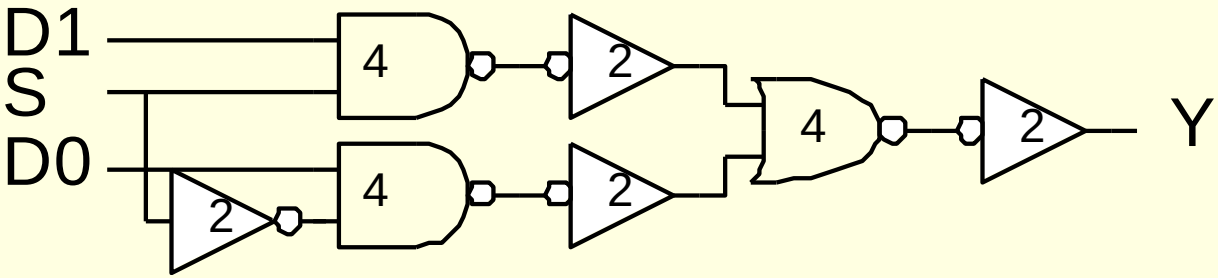

Transmission Gate Mux

- Nonrestoring mux uses two transmission gates

Transmission Gate Mux

- Mux Boolean Equation: $Y = SD_1 + \overline{S}D_0$
- Nonrestoring mux uses two transmission gates
- S=0 (S′=1) will pass D0 and S=1 (S′=0) will pass D1
  - Only 4 transistors

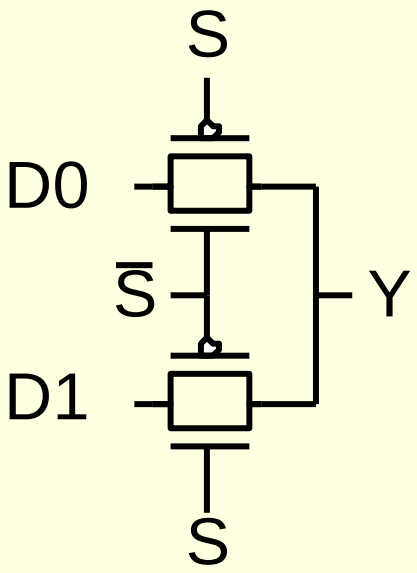

Inverting Mux

- Inverting multiplexer
  - Use compound AOI22
  - Or pair of tristate inverters
  - Essentially the same thing
- Noninverting multiplexer adds an inverter

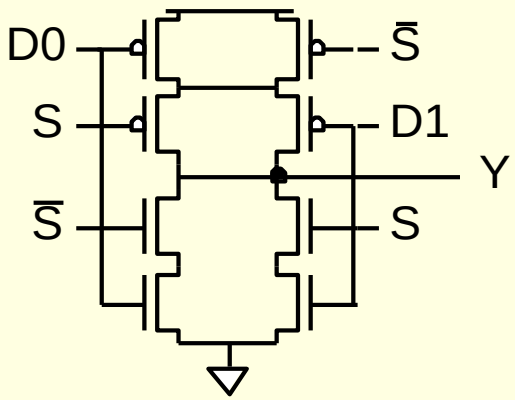

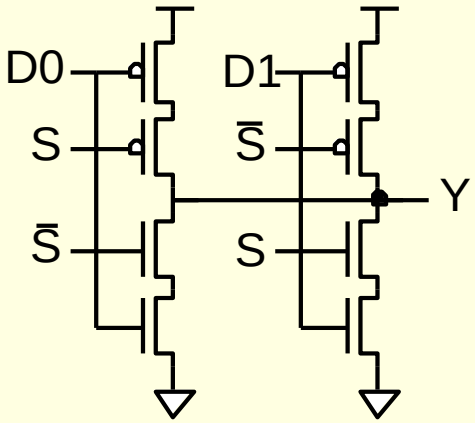

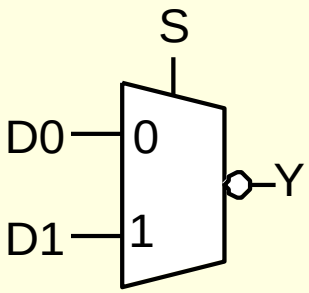

4:1 Multiplexer

- 4:1 mux chooses one of 4 inputs using two selects

4:1 Multiplexer

- 4:1 mux chooses one of 4 inputs using two selects
  - Two levels of 2:1 muxes
  - Or four tristates

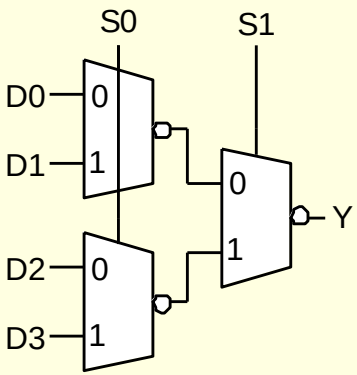

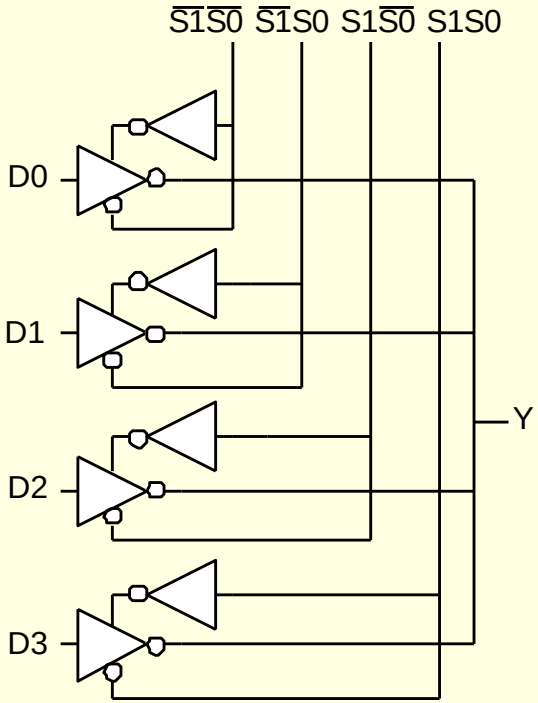

The VLSI Design Ecosystem

Chip Design

QUALCOMM
intel
MARVELL
SAMSUNG
BROADCOM
NVIDIA
Amazon
TEXAS INSTRUMENTS
ARM
Mellanox TECHNOLOGIES
IBM

CAD/EDA

cadence
SYNOPSYS
Mentor Graphics

Fab/Foundry

life.augmented
tsmc
TOWERJAZZ
UMC
intel
SMIC
Samsung
GLOBAL FOUNDRIES

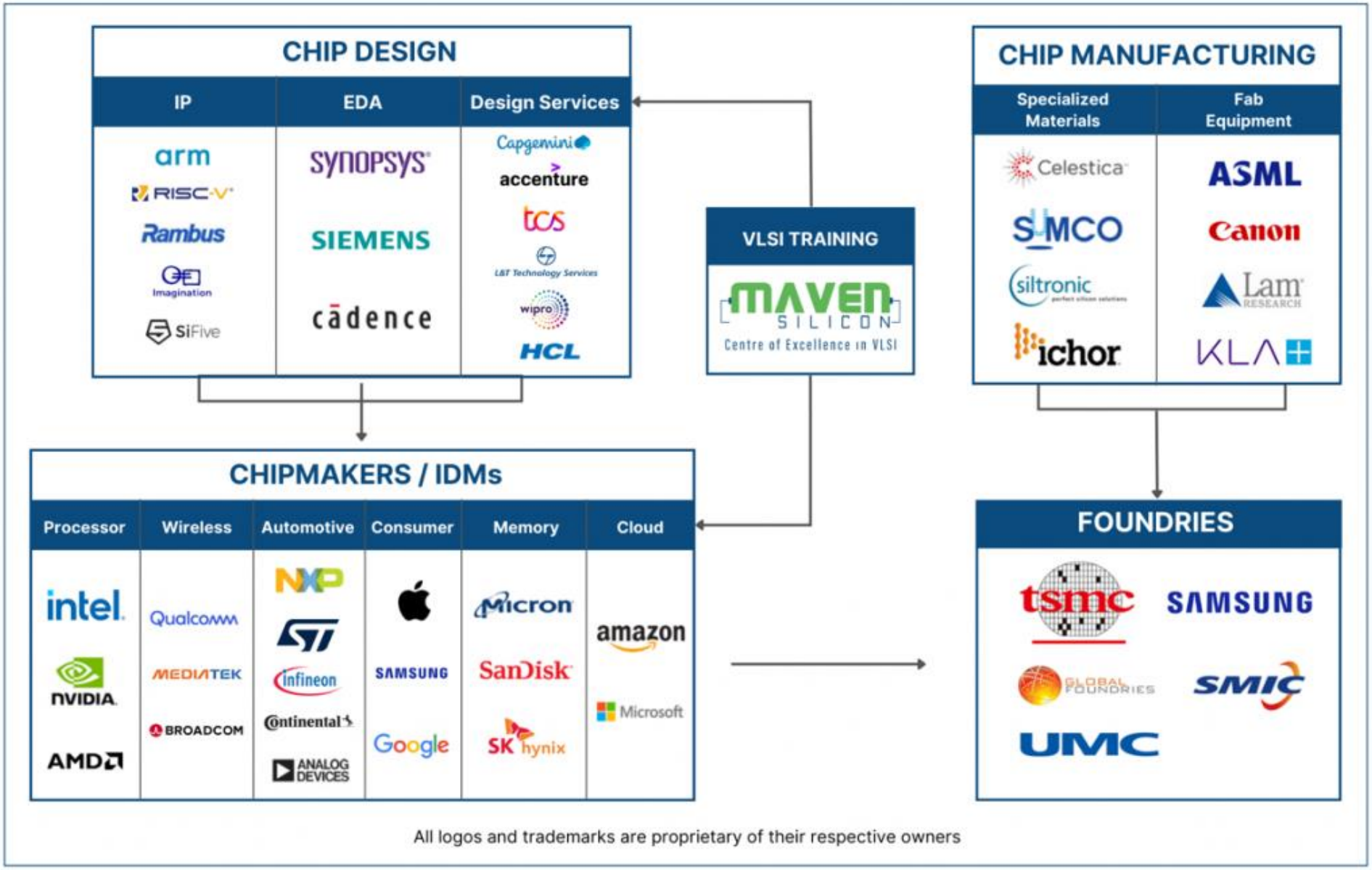
CHIP DESIGN
IP
EDA
Design Services
arm
RISC-V
Rambus
Imagination
SiFive
synopsys
SIEMENS
cadence
Capgemini
accenture
tcs
L&T Technology Services
wipro
HCL
VLSI TRAINING
MAVEN SILICON
Centre of Excellence in VLSI
CHIP MANUFACTURING
Specialized Materials
Fab Equipment
Celestica
SUMCO
siltronic
ichor
ASML
Canon
Lam RESEARCH
KLA
CHIPMAKERS / IDMs
Processor
Wireless
Automotive
Consumer
Memory
Cloud
intel
NVIDIA
AMD
Qualcomm
MEDIATEK
BROADCOM
NXP
ST
Infineon
Continental
ANALOG DEVICES
SAMSUNG
Google
Micron
SanDisk
SK hynix
amazon
Microsoft
FOUNDRIES
tsmc
SAMSUNG
GLOBALFOUNDRIES
SMIC
UMC
All logos and trademarks are proprietary of their respective owners

CMOS Fabrication

- CMOS transistors are fabricated on silicon wafer (Disk of Silicon)
- Wafers diameters (75-200-300 mm) and less than 1 mm thick
- ***Photolithography***
  - photo (light), lithos (stone), and graphe (picture),
  - “carving pictures in stone using light.”
- Also termed as optical lithography or UV-lithography
- On each step, different materials are:
  - Deposited
  - Patterned
  - Etched
- Easiest to understand by viewing both views of wafer:
  - Top view
  - Cross-sectional view

Inverter Cross-section

- Typically use p-type substrate for nMOS transistors
- Requires to make an n-well for body of pMOS transistors

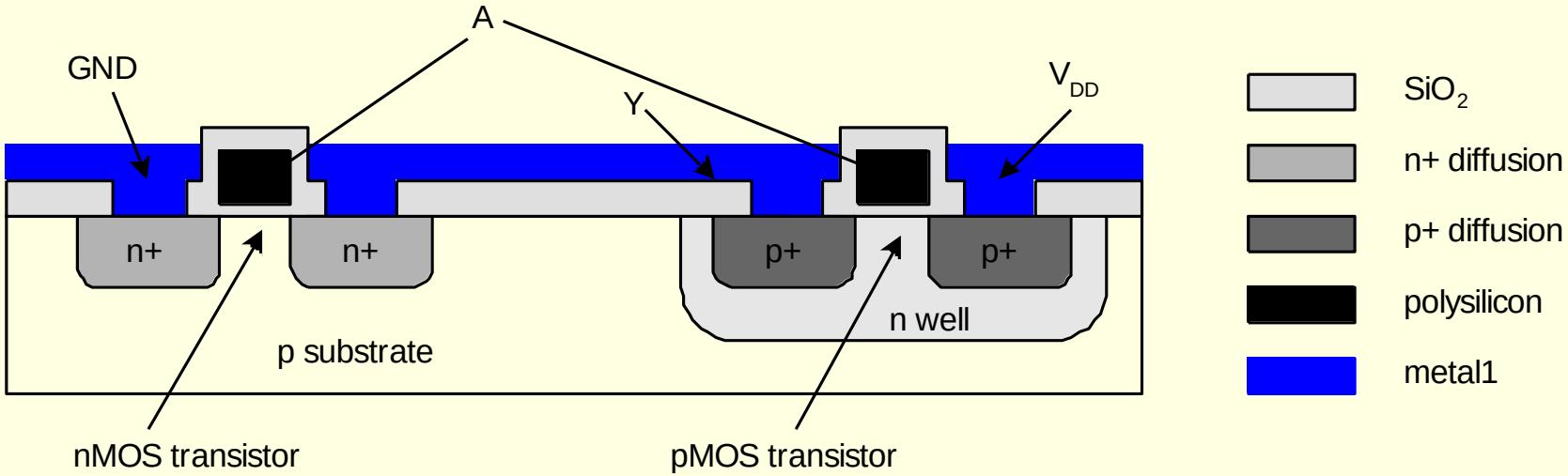

Well and Substrate Taps

- Substrate must be tied to GND and n-well to V_{DD}
- Metal to lightly-doped semiconductor forms poor connection called Schottky Diode
- Use heavily doped well and substrate contacts/taps (or ties)

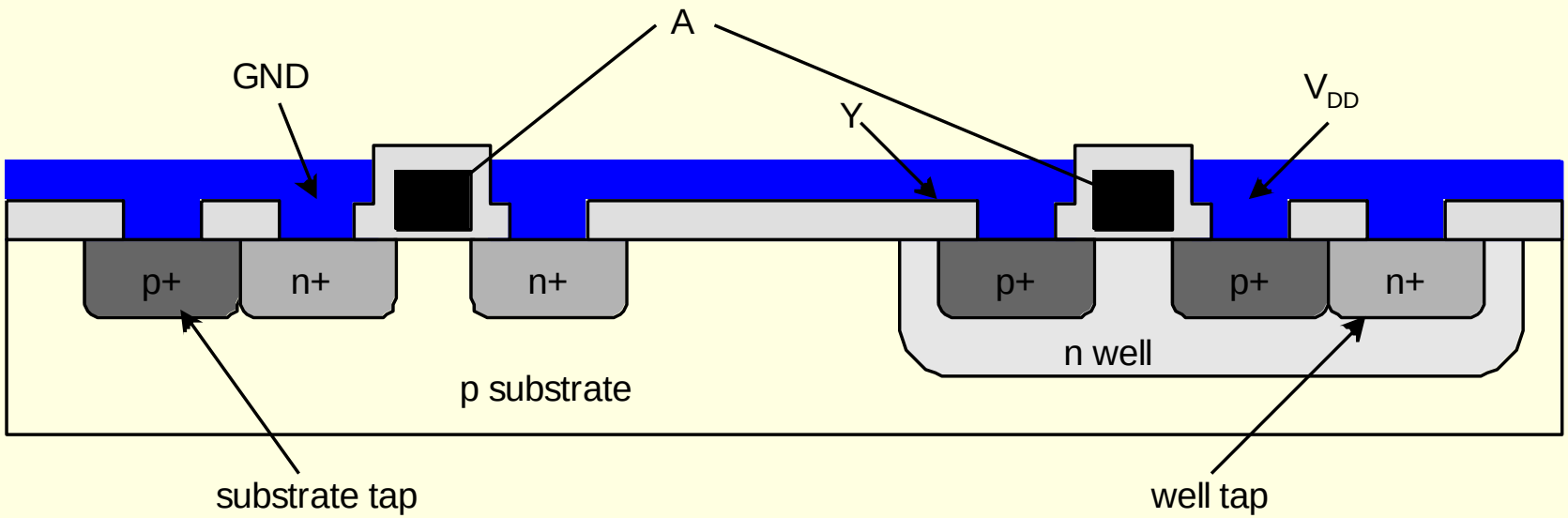

Inverter Mask Set

- Top view
- Transistors and wires are defined by *masks*
- Cross-section taken along dashed line

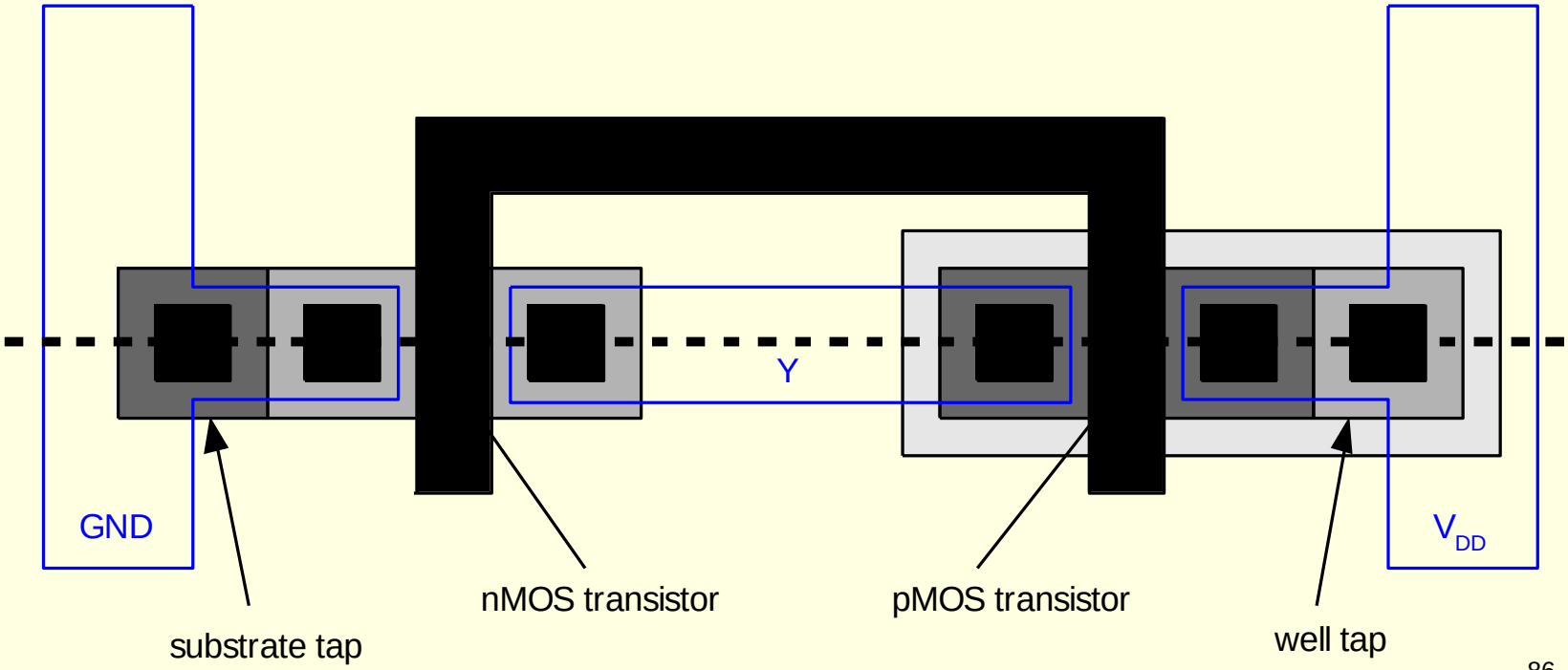

Detailed Mask Views

- **Six masks**

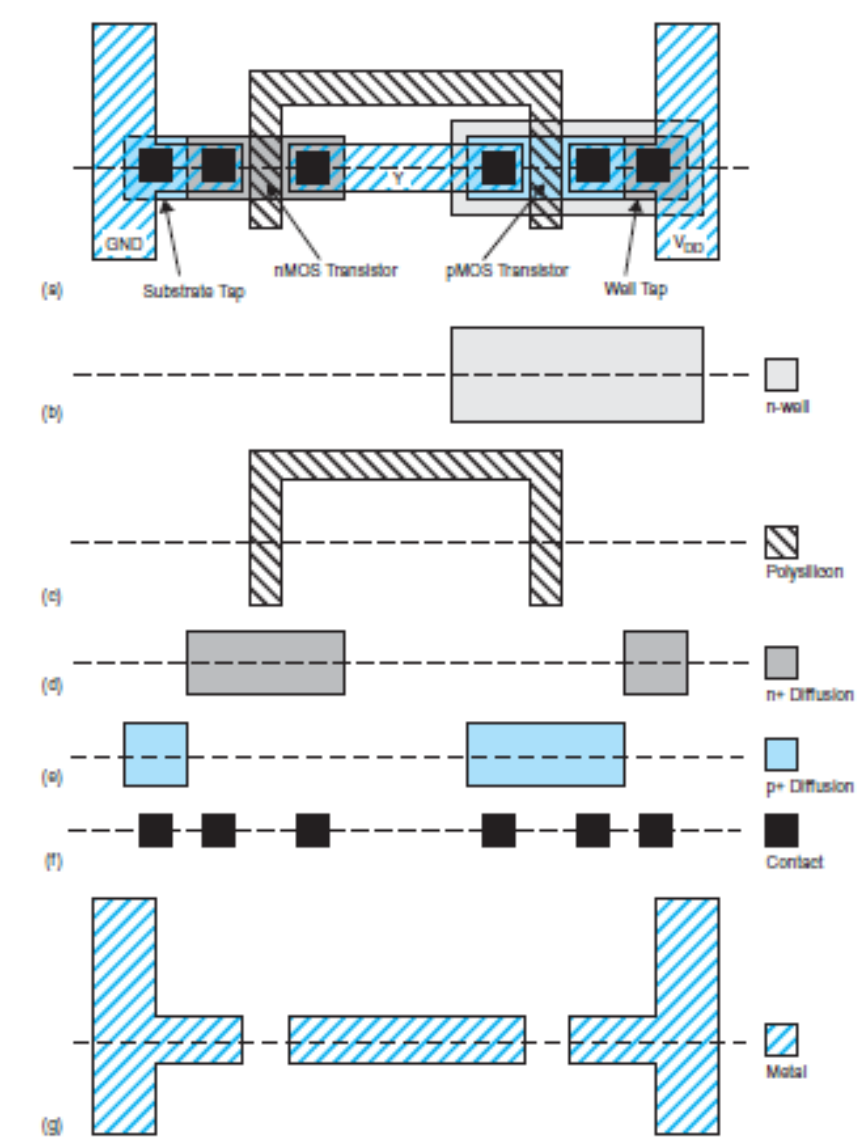

FIGURE 1.35 Inverter mask set. Color version on inside front cover.

In reality >40 masks may be needed

Lithography Steps…Summary

1. Cover wafer with SiO_2 (oxide) called Oxidation
2. Spin on Photoresist
3. Mask
4. Expose photoresist to Ultra-violate (UV) light
5. Strip off soften Photoresist (only) with chemicals
6. Etch SiO_2 layer (only exposed region) with HF
7. Strip off remaining photoresist called piranah etch
8. Implant or diffuse into exposed wafer
9. Strip off the remaining SiO_2 layer using HF

Fabrication Steps

- Start with blank wafer (typically p-type where NMOS is created)
- Build inverter from the bottom up
- First step will be to form the n-well (where PMOS would reside)
  - Cover wafer with protective layer of SiO_2 (oxide)
  - Remove oxide layer where n-well should be built
  - Implant or diffuse n dopants into exposed wafer to form n-well
  - Strip off SiO_2

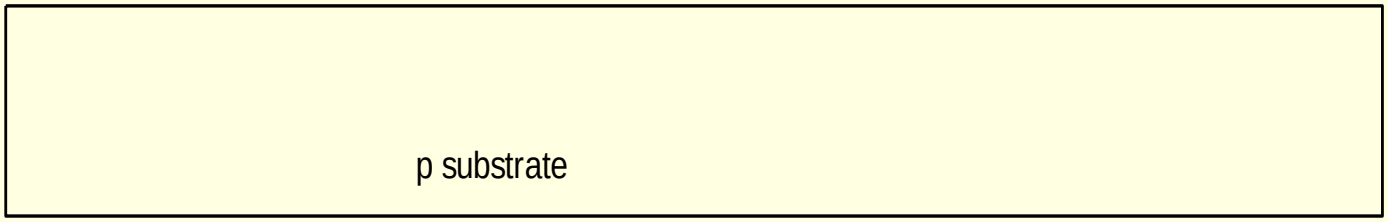

Oxidation

- Grow SiO_2 on top of Si wafer
  - 900 – 1200 C with H_2O or O_2 in oxidation furnace

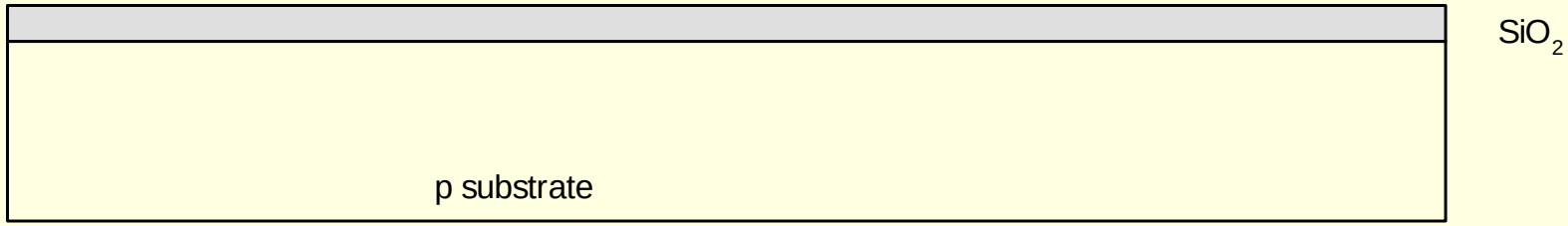

Photoresist

- Spin on photoresist
  - Photoresist is a light-sensitive organic polymer
  - Property changes where exposed to light

- Two types of photoresists (positive or negative)
  - Positive resists can be removed if exposed to UV light
  - Negative resists cannot be removed if exposed to UV light

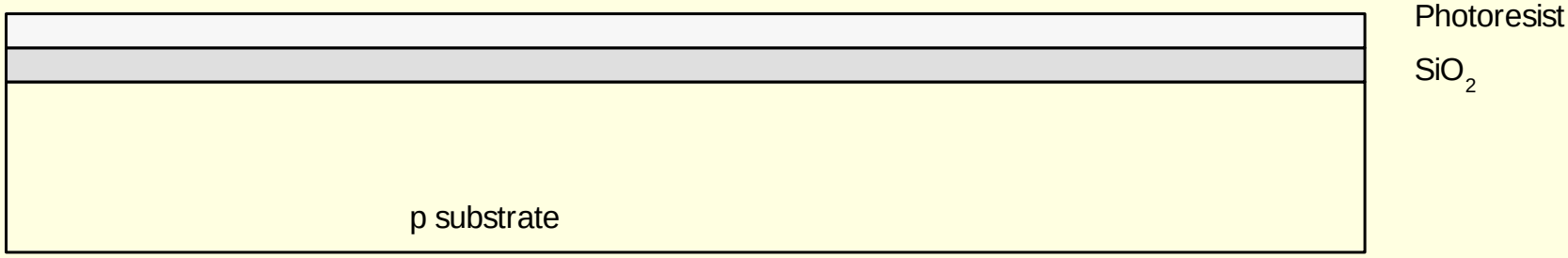

Lithography

- Expose photoresist to Ultra-violate (UV) light through the n-well mask
- Strip off exposed photoresist with chemicals

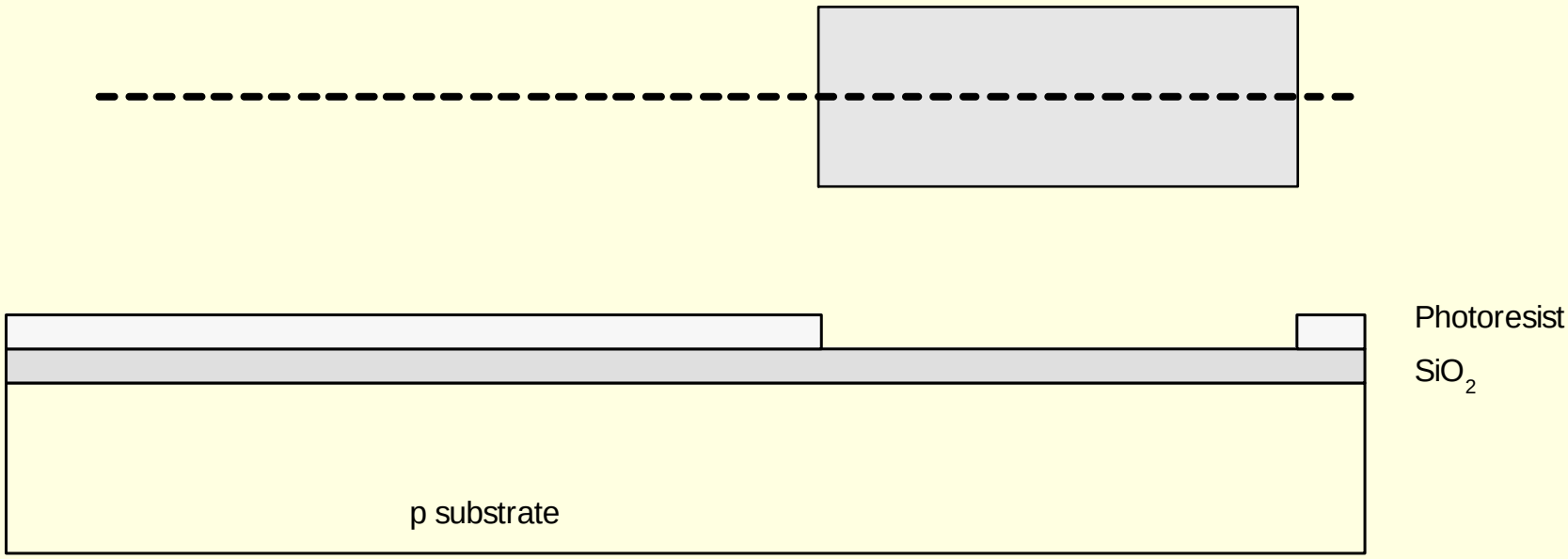

Etch

- Etch oxide with hydrofluoric acid (HF)
  - Seeps through skin and eats bone; nasty stuff!!!
- Only attacks oxide where resist has been exposed
- N-well pattern is transferred from the mask to silicon-di-oxide surface; creates an opening to the silicon surface

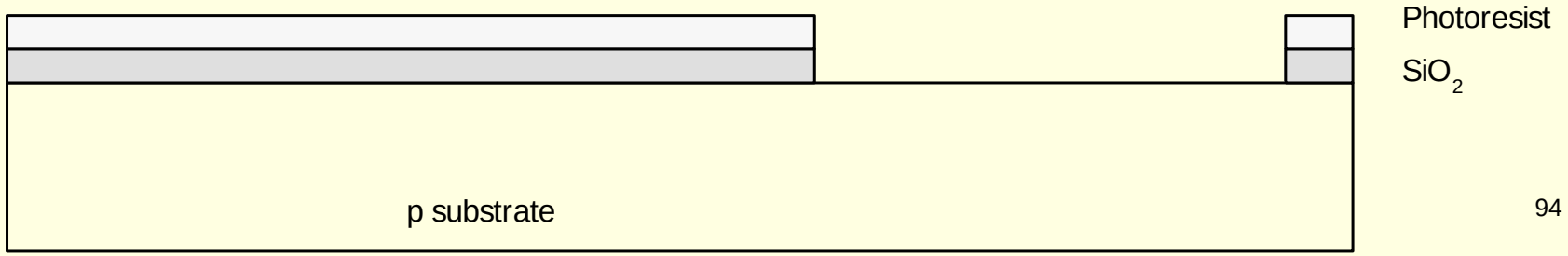

Strip Photoresist

- Strip off remaining photoresist
  - Use mixture of acids called piranah etch
- Necessary so resist doesn't melt in next step

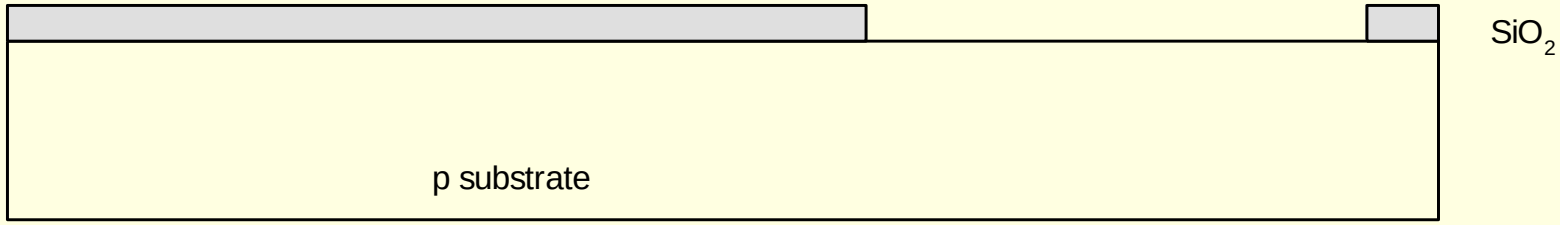

n-well

- n-well is formed with diffusion or ion implantation
- Diffusion
  - Place wafer in furnace with arsenic-rich gas
  - Heat until As atoms diffuse into exposed Si
- Ion Implanatation
  - Blast wafer with beam of As ions
  - Ions blocked by SiO_2, only enter exposed Si
- SiO_2 shields (or masks) areas which remain p-type

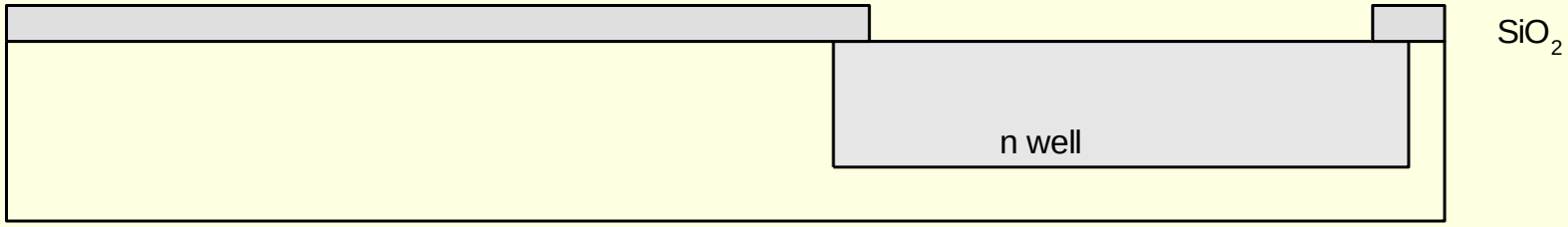

Strip Oxide

- Strip off the remaining oxide using HF
- Back to bare wafer with n-well
- Subsequent steps involve similar series of steps

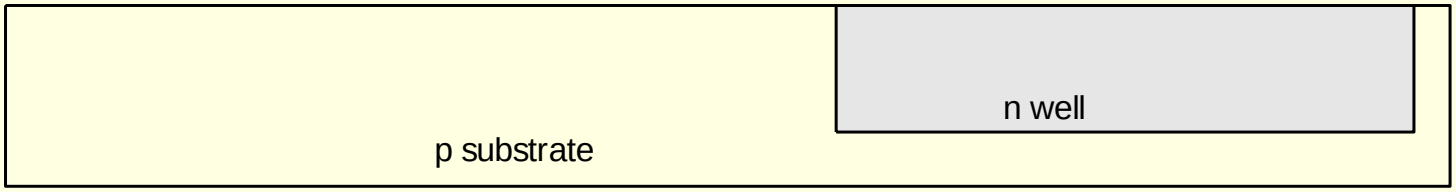

Polysilicon
(self-aligned gate technology)

- Deposit very thin layer of gate oxide
  - < 20 Å (6-7 atomic layers)
- Chemical Vapor Deposition (CVD) of silicon layer
  - Place wafer in furnace with Silane gas (SiH_4)
  - Forms many small crystals called polysilicon
  - Heavily doped to be good conductor

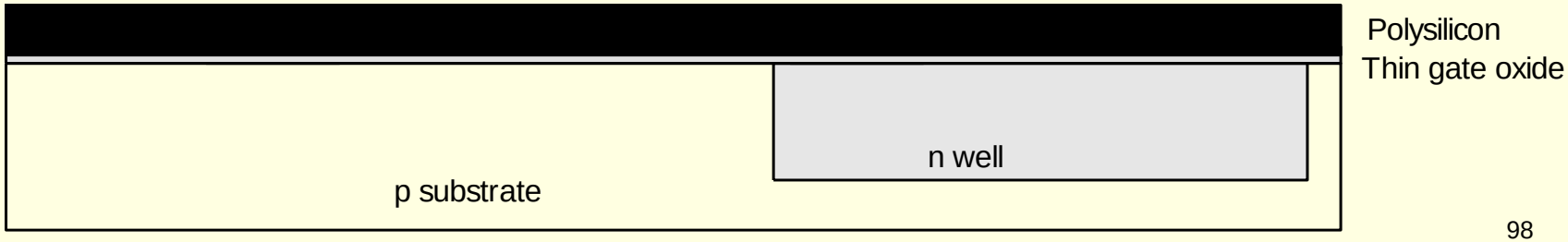

Polysilicon Patterning

- Use same lithography process discussed earlier to pattern polysilicon

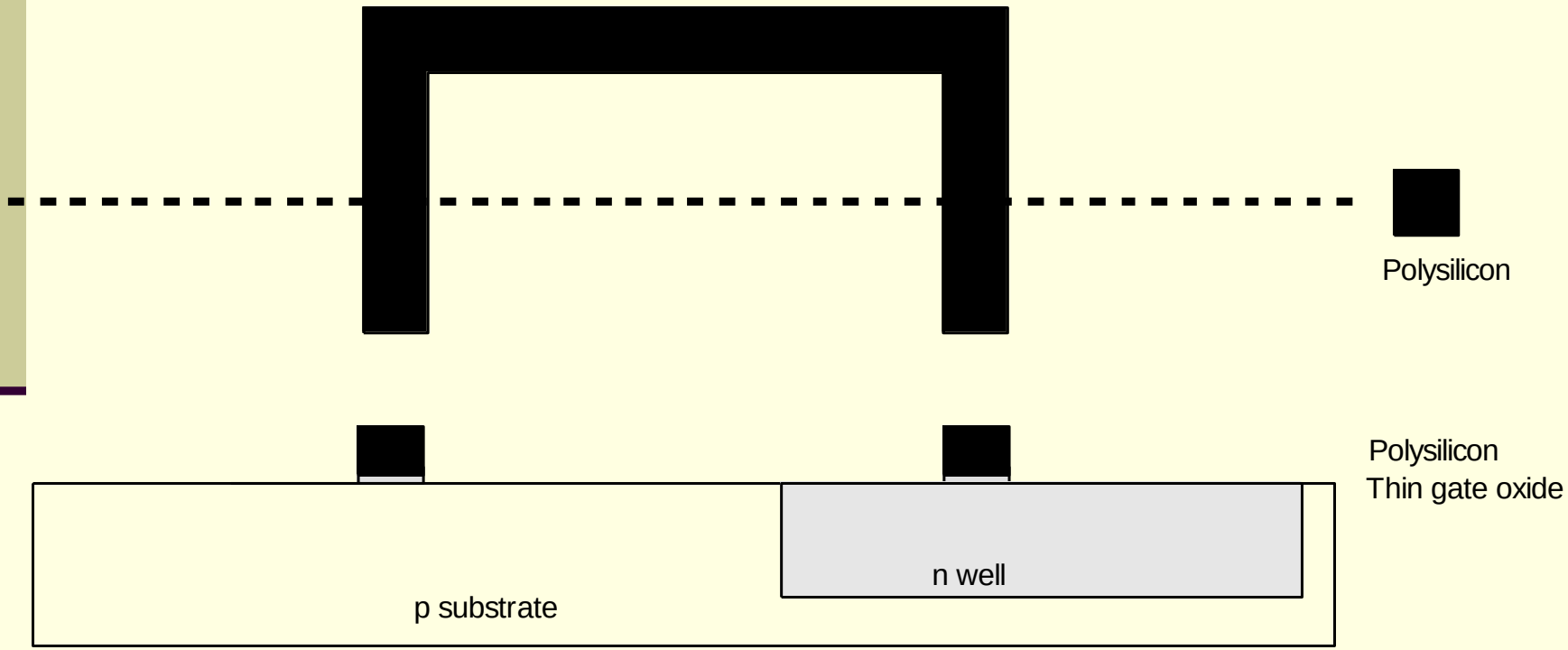

Self-Aligned Process

- Use gate-oxide/polysilicon and masking to expose where n+ dopants should be diffused or implanted
- N-diffusion forms nMOS source, drain, and n-well contact

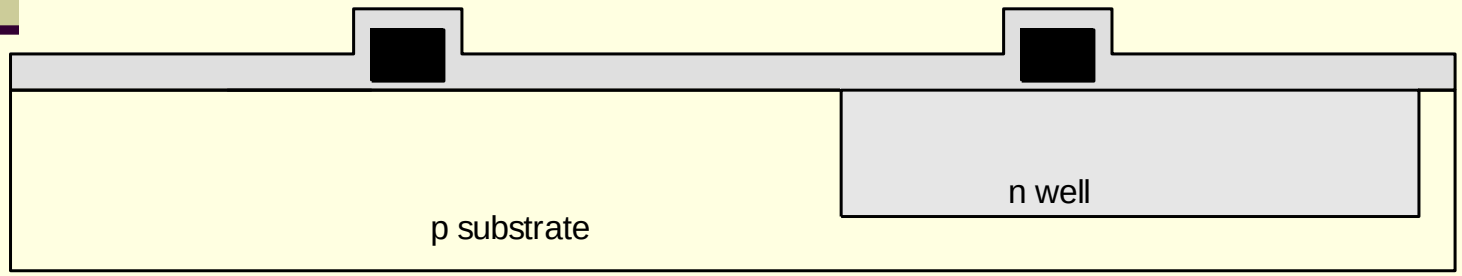

N-diffusion/implantation

- Pattern oxide and form n+ regions
- *Self-aligned process* where gate blocks n-dopants
- Polysilicon is better than metal for self-aligned gates because it doesn't melt during later processing

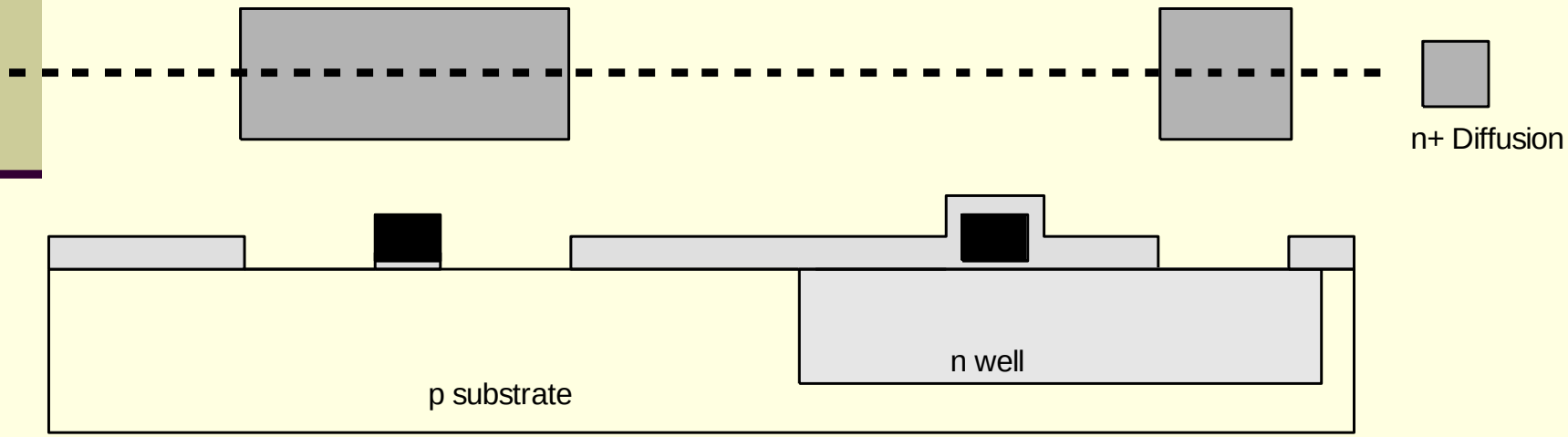

N-diffusion/implantation cont.

- Historically dopants were diffused
- Usually high energy ion-implantation used today
- But n+ regions are still called diffusion

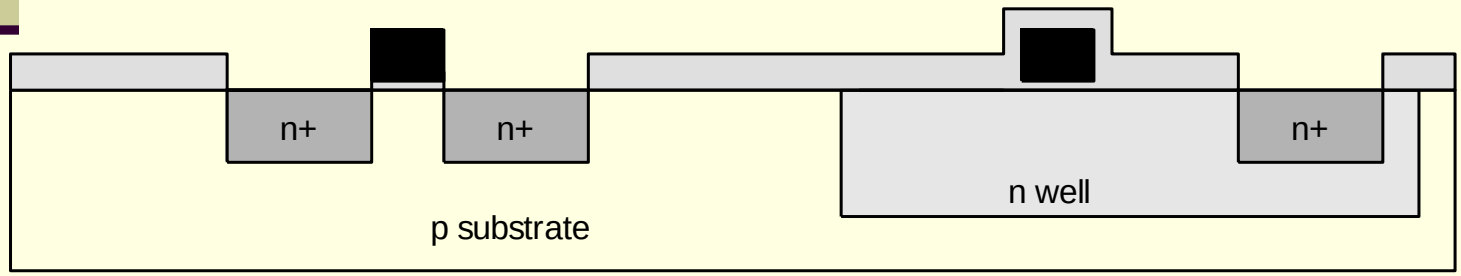

N-diffusion cont.

- Strip off oxide to complete patterning step

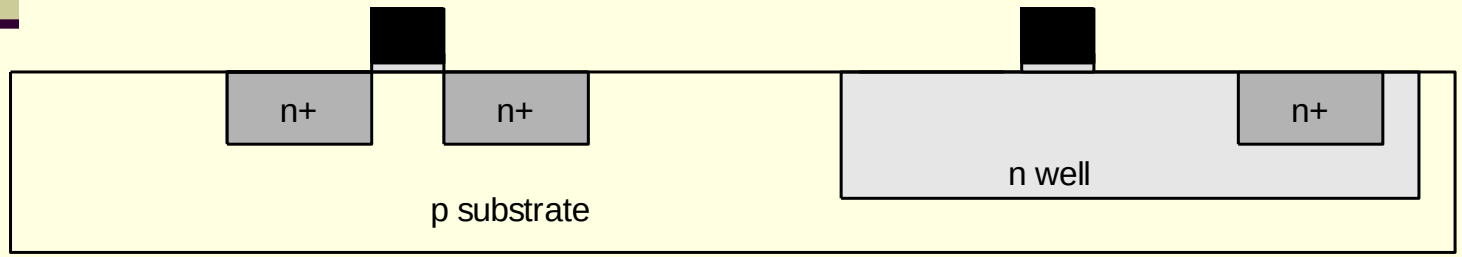

P-Diffusion/implantation

- Similar set of steps form p+ “diffusion” regions for PMOS source and drain and substrate contact

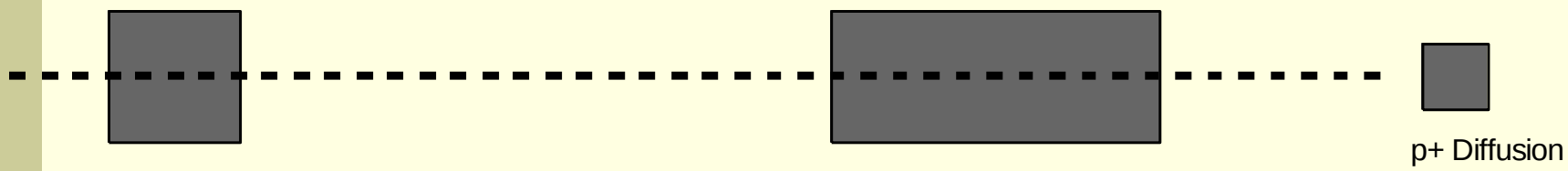

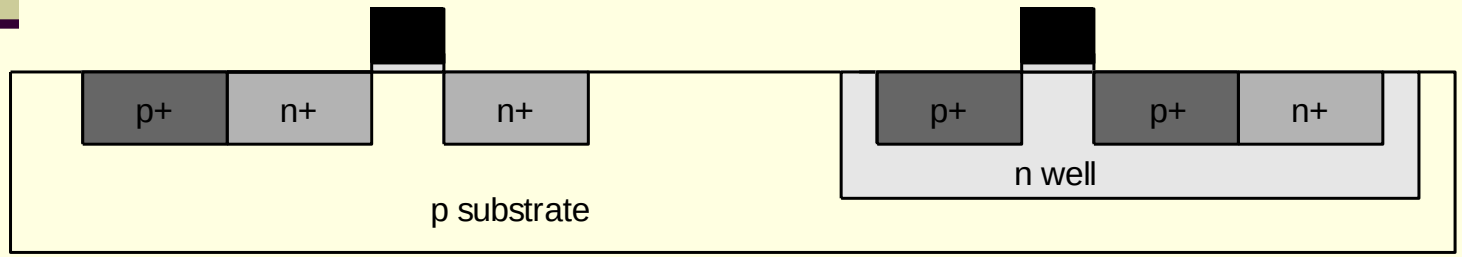

Contacts

- Now we need to wire together the devices
- Cover chip with thick field oxide (FO)
- Etch oxide where contact cuts are needed

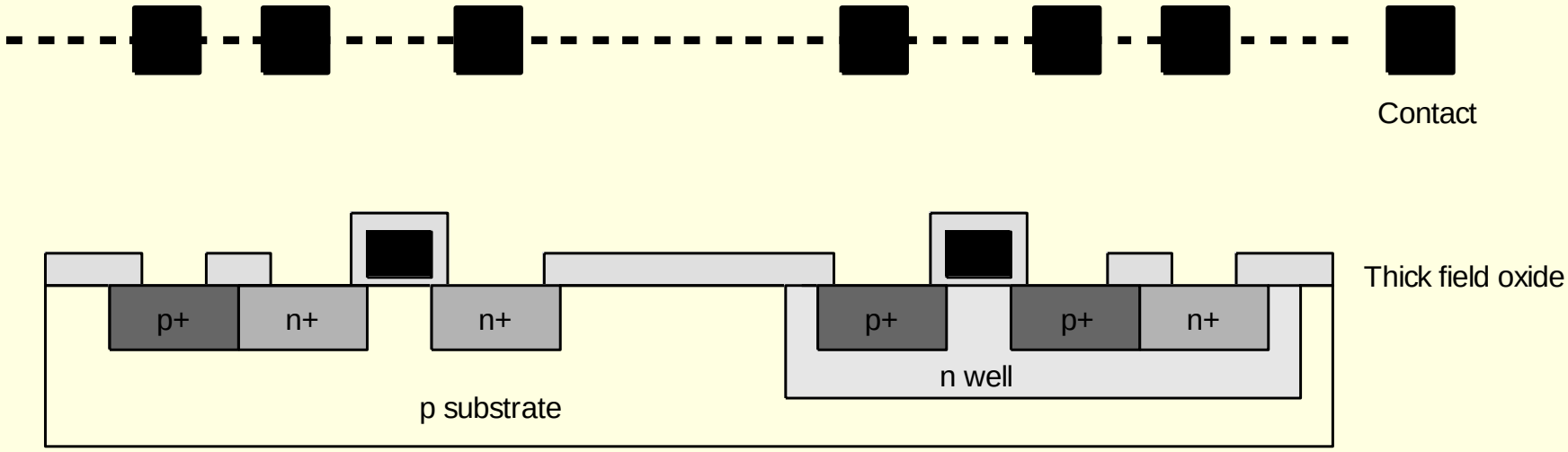

Metalization

- Sputter on aluminum over whole wafer
- Copper is used in newer technology
- Pattern to remove excess metal, leaving wires

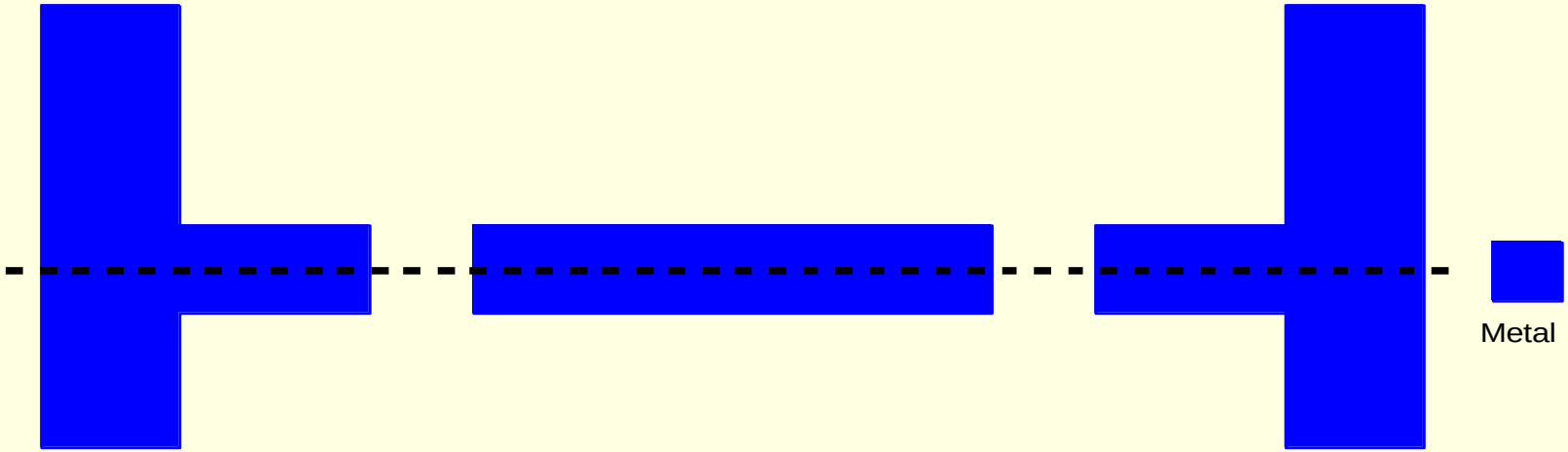

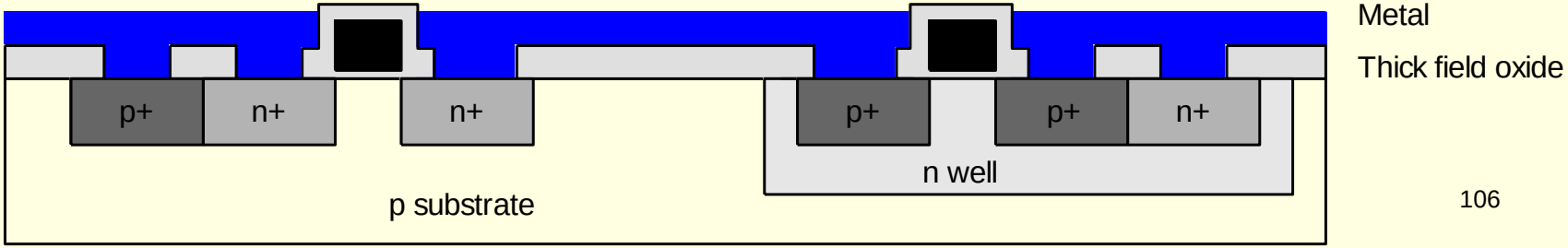

CMOS Technology

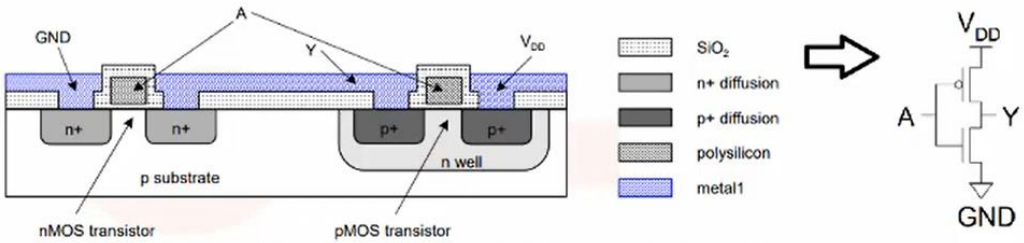

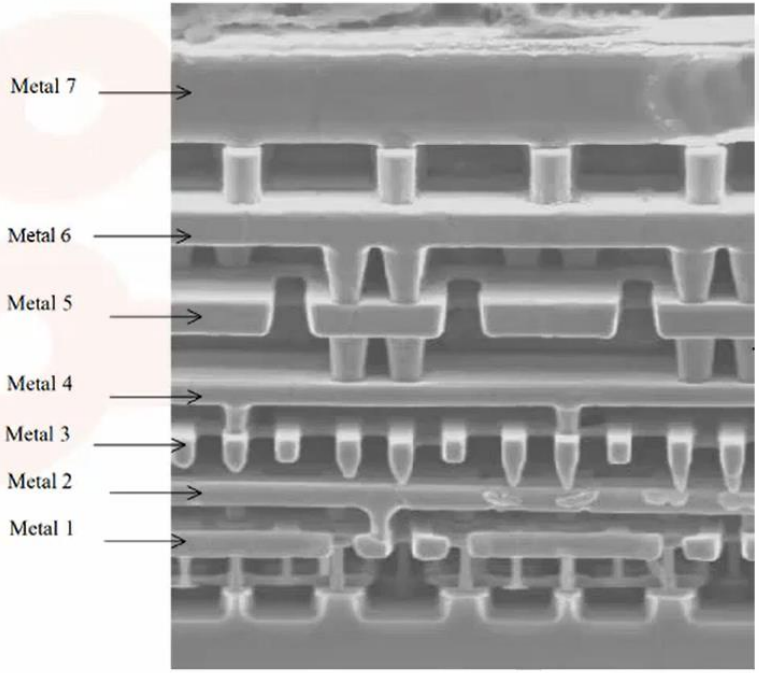

Source: techspot.com

Source: Wikipedia, Cepheiden

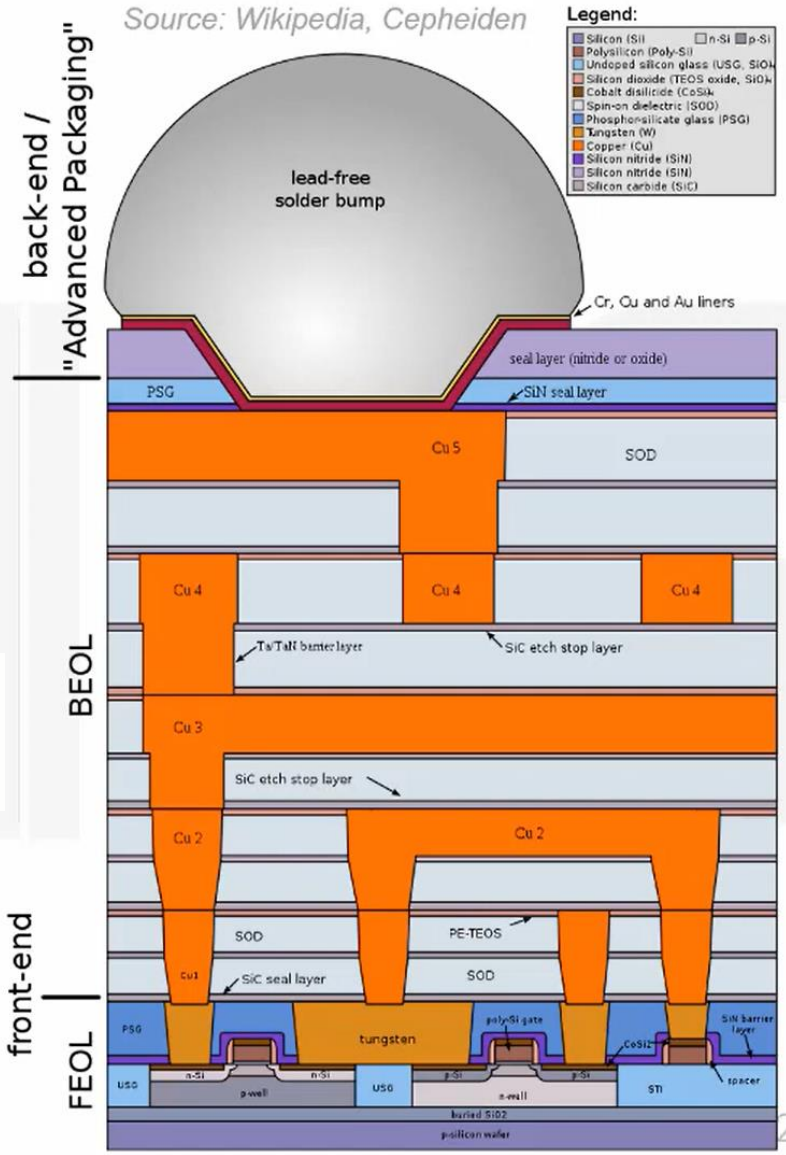

Physical Layout Design

- Chips are specified with a set of masks
- Minimum dimensions of masks determine transistor size
  - Hence speed, cost, and power
- Feature size *f* = distance between source and drain
  - Set by minimum width of polysilicon
- Feature size improves 30% every 3 years or so
- Normalize for feature size when describing design rules
- Express rules in terms of $\lambda = f/2$ (Scalable Design Rules)
  - E.g. $\lambda = 0.3\ \mu m$ in $0.6\ \mu m$ process

MOSIS Layout Design Rules

- MOSIS (MOS Implementation Service) provides chip design tools and related services that enable universities, government agencies, research institutes and businesses to prototype chips efficiently and cost-effectively.
- MOSIS has developed a set of scalable lambda-based design rules that covers a wide range of manufacturing processes.
- The MOSIS rules describe:
  - minimum width to avoid breaks in a line
  - minimum spacing to avoid shorts between lines
  - minimum overlap to ensure that two layers completely overlap

Layout Design Rules

- A conservative but easy-to-use set of design rules or layouts with two metal layers in an n-well process is as follows:
  - Metal and diffusion have minimum width and spacing of 4 λ.
  - Contacts are 2 λ × 2 λ and must be surrounded by 1 λ on the layers above and below.
  - Polysilicon uses a width of 2 λ.
  - Polysilicon overlaps diffusion by 2 λ where a transistor is desired and has a spacing of 1 λ away where no transistor is desired.
  - Polysilicon and contacts have a spacing of 3 λ from other polysilicon or contacts.
  - N-well surrounds pMOS transistors by 6 λ and avoids nMOS transistors by 6 λ.

Simplified Design Rules

- Conservative rules to get you started

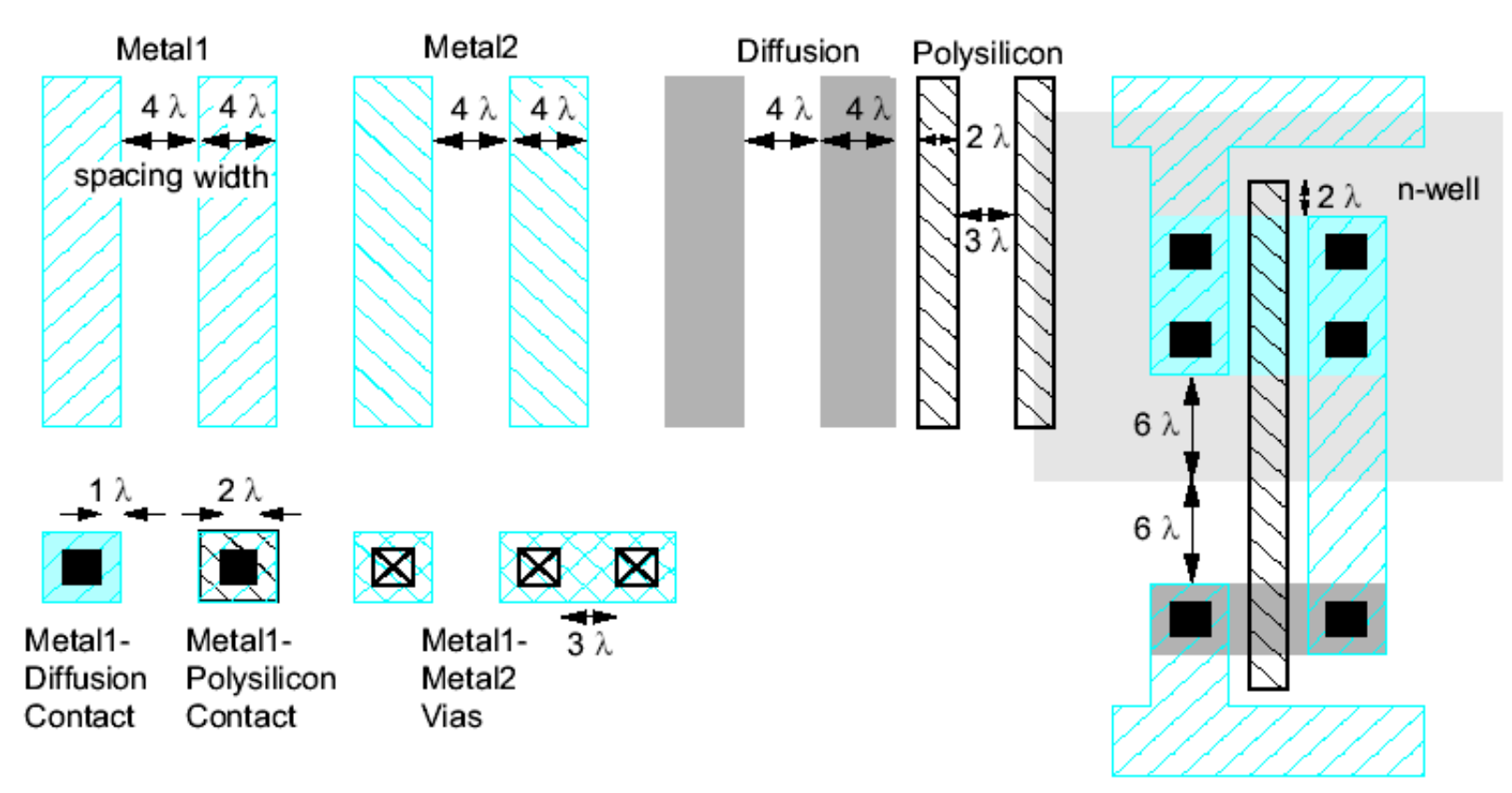

Inverter Layout

- Transistor dimensions specified as Width / Length (W/L)
  - Minimum size is 4-6λ/ 2λ, sometimes called 1 unit
  - In *f* = 0.25 μm process, this is 0.5-0.75 μm wide (W), 0.25 μm long (L)
  - Since λ=*f*/2, λ=0.125 μm.

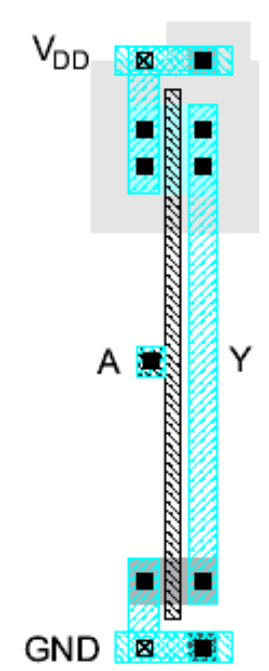

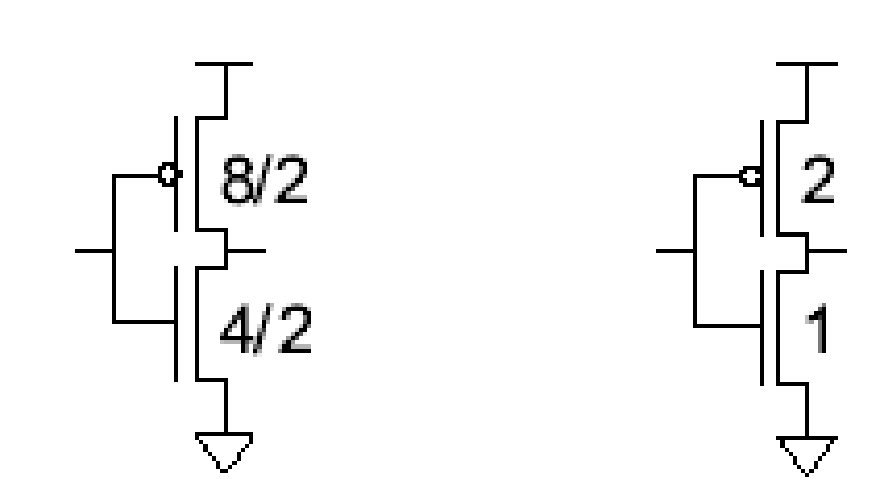

“Line of Diffusion” Rule

- Draw four horizontal strips (bottom up):
  - metal ground at the bottom
  - n-diffusion
  - p-diffusion
  - metal power at the top
- Draw Polysilicon lines vertically (no. of P-Si depends on no. of I/Ps)
- Connect Metal wires

Example: Inverter

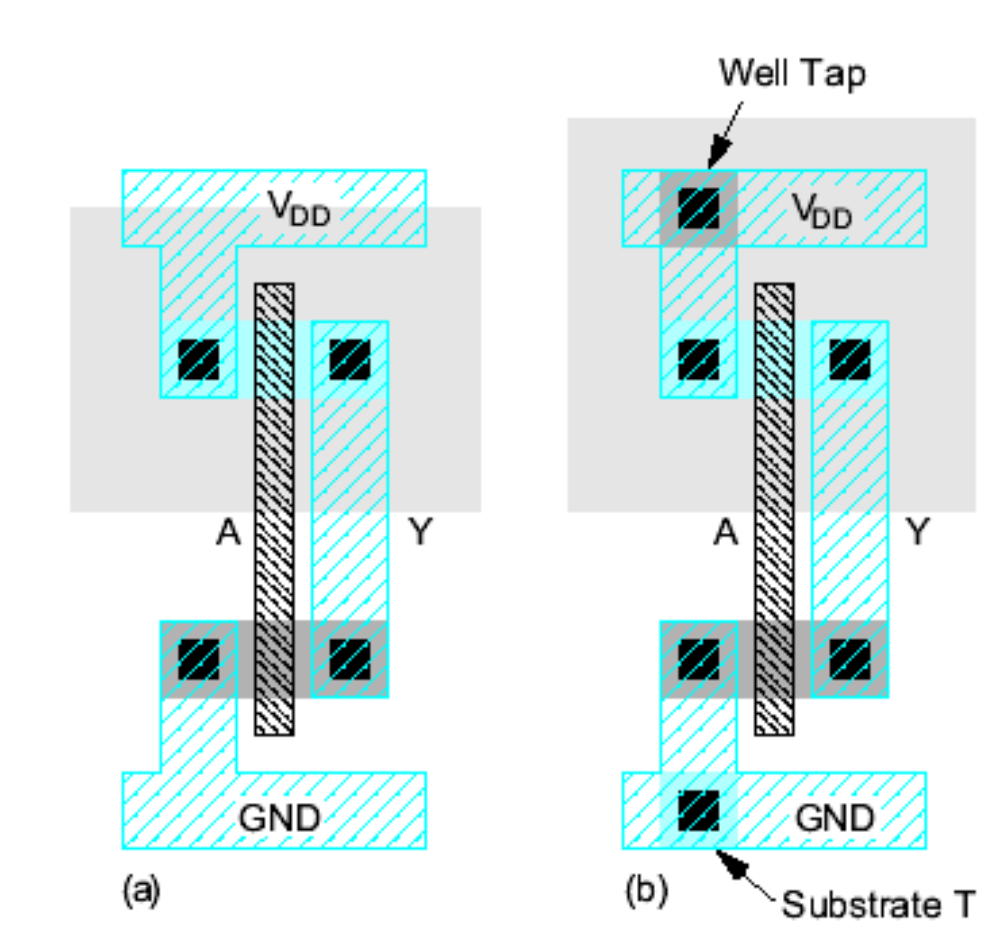

Example: NAND3

- Horizontal N-diffusion and P-diffusion strips
- Vertical polysilicon gates
- Metal1 V_{DD} rail at top
- Metal1 GND rail at bottom
- 32 λ by 40 λ

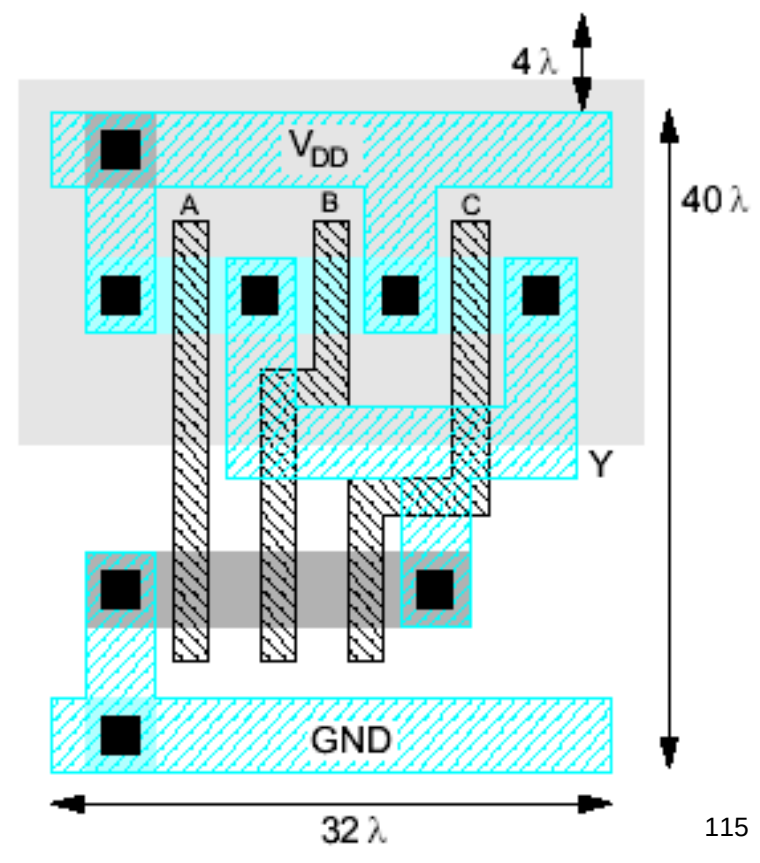

Stick Diagrams

- *Stick diagrams* help plan layout quickly
  - Need not be to scale
  - Draw with color pencils or dry-erase markers

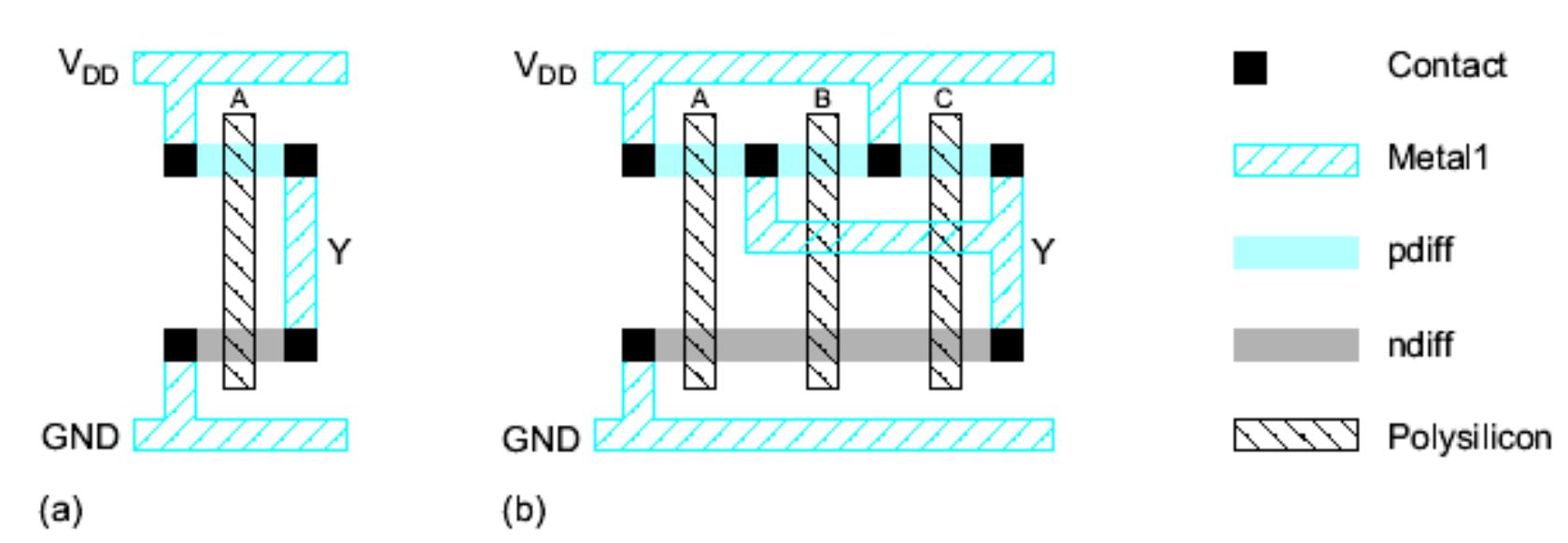

Cont...Stick Diagrams

- *Stick diagrams* help plan layout quickly
  - Need not be to scale
  - Draw with color pencils or dry-erase markers

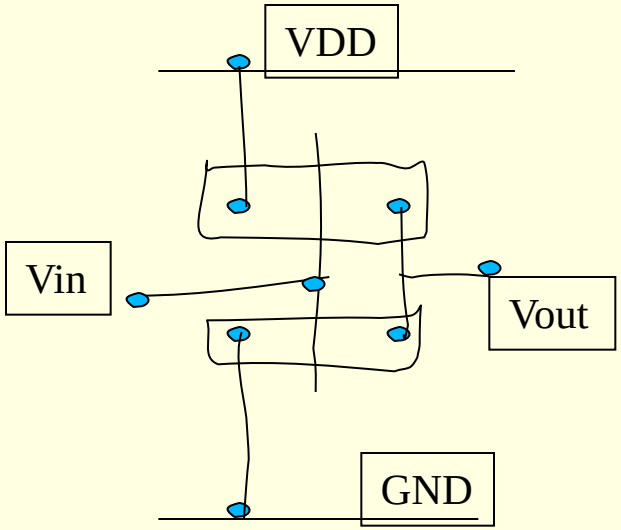

Area Estimation

- Estimate area by counting wiring tracks
  - Multiply by 8 to express in λ

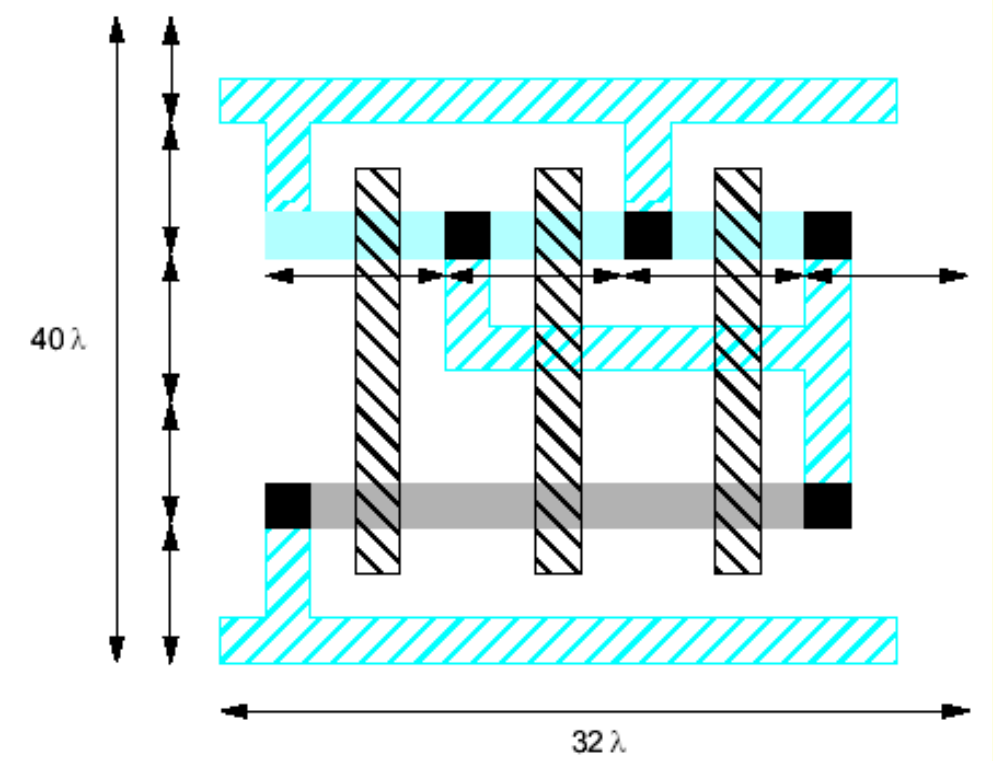

Example: OAI31

- Sketch a stick diagram for OAI31 and estimate area
  - $$Y = \overline{(A + B + C) \bullet D}$$

Example: OAI31

- Sketch a stick diagram for OAI31 and estimate area
  - $Y = \overline{(A + B + C) \bullet D}$

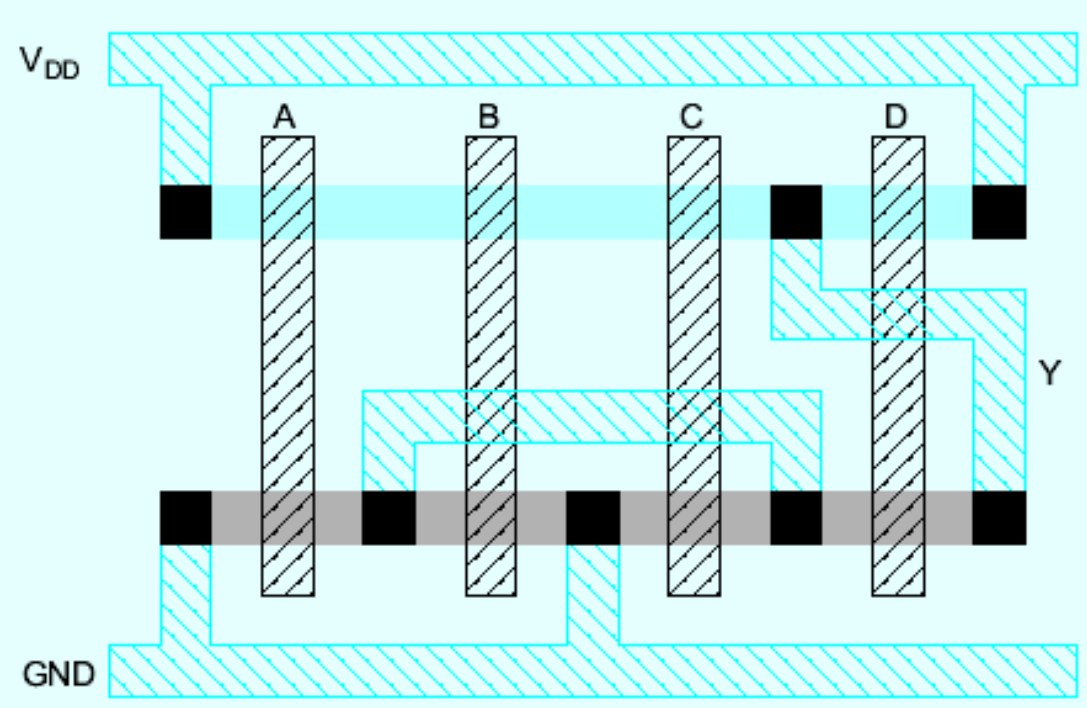

Example: OAI31

- Sketch a stick diagram for OAI31 and estimate area
  - $Y = \overline{(A + B + C) \bullet D}$

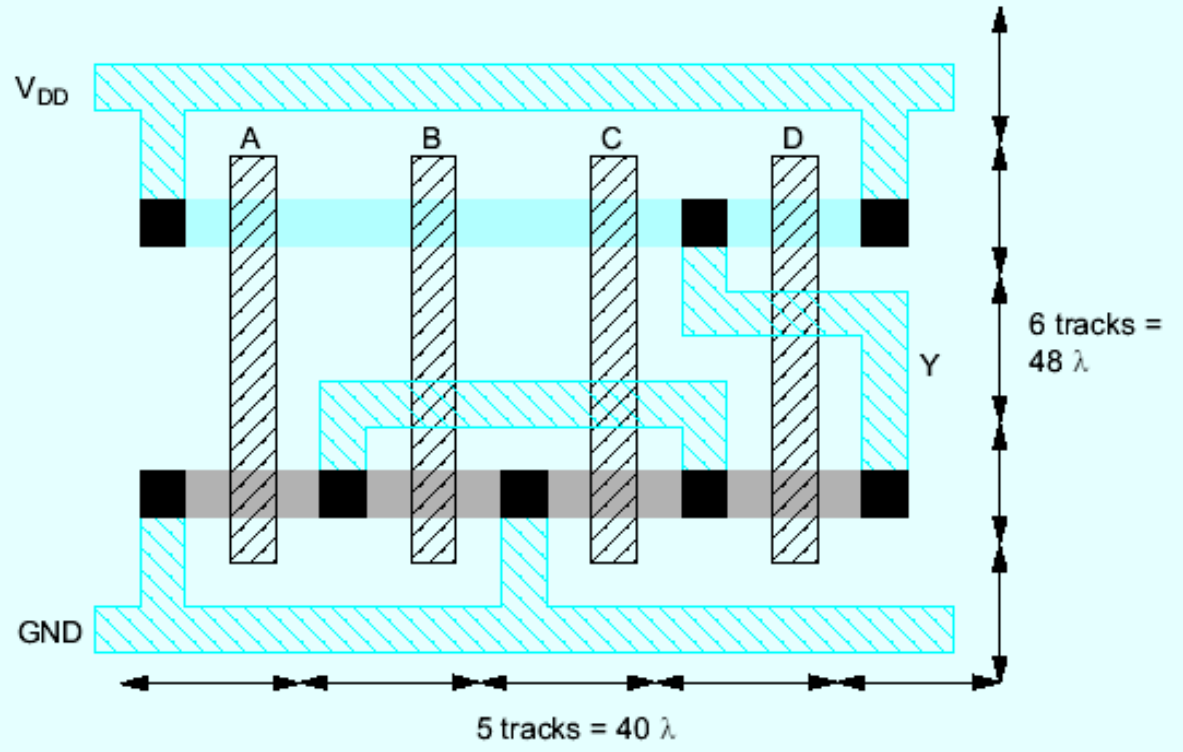

Stich Diagrams using Euler's Path

- When a signal is applied to the gates of multiple transistors.
- Vertices(nodes) and Edges(links/branches)
- XOR Gate → $Y=AB'+A'B=\overline{(AB+A'B')}$

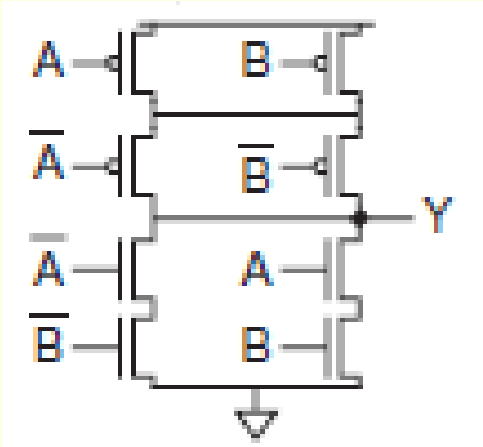

VLSI Design Flow

1. Design Specification
2. Design Entry
3. Functional Simulation
4. Planning Placement and Routing
5. Timing Simulation
6. Fabrication into the Chip

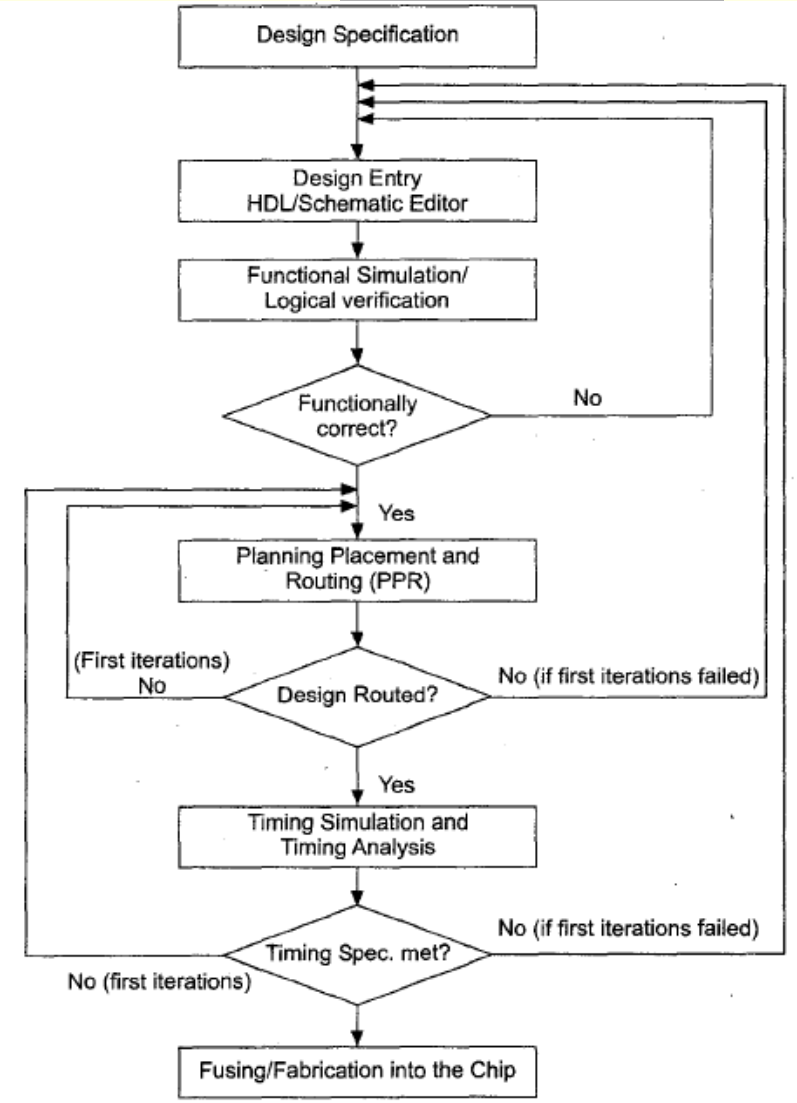

Design Specification

1. The algorithm with mathematical representation
2. Number of inputs/outputs and number of bits in each of them
3. Number of bits used in the internal arithmetic operation
4. Number of clock signals to be used in the design
5. Maximum clock frequency to be used
6. Area of the chip
7. Power dissipation in the chip

Design Entry

- Architectural Decisions to be taken in this phase:

1. Number of sub-blocks to be used with their functionality and interconnects such as adders, multipliers, dividers
2. Type of processing (Serial or Parallel) in each stage
3. Whether the design will be pipelined, number of stages in the pipeline

- Design entry are of two types:

a) Schematic Entry
b) Hardware description Language (HDL) entry

Functional Simulation

- To verify that the logic created is correct or not.
- Types of error:
  1. Logical error
  2. Human error

     (unconnected nets, duplication of names or syntax error in HDL)

Planning Placement and Routing

- Main aim is to minimize the circuit area so that cost of the chips is reduced.
- The other criteria to be fulfilled are wire length, delay, power, via minimization.
- **Main Steps:-**

1. **Partitioning:** dividing the circuit in such a way that area of each sub-circuit is well within prescribed range and number of interconnection between sub-circuits is also minimized
2. **Floorplanning:** determine the shape of each sub-circuit module and pin locations at the boundary and find out the approximate location of each module in a rectangular chip
3. **Placement:** determination of best position of each module, when each module has a fixed shape, area and terminals
4. **Routing:** interconnection of different circuit components, with an aim to minimize the chip area and also reduction of total wire length

Timing Simulation

- After a successful P&R, timing simulation is the next step to check net delays and gate delays in a circuit.
  - Net delay is a delay encountered by a signal for traversing from output of one gate to the input of another gate.
  - Gate delay is delay from input of one gate to the output of same gate due to propagation time of gate.
- Timing simulation is done with the clock speed as per mentioned in design specs.

Application Specific Integrated Circuit (ASIC)

- Three different VLSI design styles used namely:

1. Full Custom (ASIC) → Microprocessor
2. Semi Custom (ASIC)
   a) *Standard Cell Based ASIC* → Logic Gates, Flip Flops, Multiplexers, Demultiplexers etc
   b) *Gate Array Based ASIC* → prefabricated silicon chip or predefined transistors on the silicon wafer (Masked Gate Array)
      I. **Channeled Gate Array**
      II. **Channel Less Gate Array**
      III. **Structured Gate Array**
3. Programmable (ASIC)
   a) *Programmable Logic Devices (PLD)* → PAL, PLA, GAL, ROM, PROM, EPROM, EEPROM, UVPROM etc
   b) *Field Programmable Gate Arrays (FPGA)*

CMOS process characteristics

Manufacturer		Intel							IBM			
Feature Size f	nm	250	180	130	90	65	45	32	130	90	65	45
Reference		[Bohr96]	[Yang98]	[Tyagi00]	[Thompson02]	[Bai04]	[Mistry07]	[Natarajan08]	[Sleight01]	[Khan02]	[Lee05]	[Narasimha06]
V_{DD}	V	1.8	1.5	1.3	1.2	1.2	1	1	1.2	1	1	1
L_{gate}	nm	180	140	70	50	35	35	30	60	45	40	35
t_{ox}	nm	4.1	3	1.5	1.2	1.2	1	0.9	2.3	1.85	1.05	1.15
$I_{dsat\text{-}n}$	μA/μm	700	940	1170	1449	1460	1360	1550	915	1000	1137	1140
$I_{dsat\text{-}p}$	μA/μm	320	420	600	725	880	1070	1210	520	480	700	800
I_{off}	nA/μm	1	3	100	400	100	100	100	100	200	200	200
Strain		no	no	no	yes	yes	yes	yes	no	no	yes	yes
High-k Gates		no	no	no	no	no	yes	yes	no	no	no	no
Gate Pitch	nm	640	480	336	260	220	160	112.5	325	245		190
Metal1 Pitch	nm	640	500	350	220	210	150	112.5	350	245		140
Metal Layers		5	6	6	7	8	9	9	8	10	10	10
Material		Al	Al	Cu	Cu	Cu	Cu	Cu	Cu	Cu	Cu	Cu
Low-k Dielectric		none	FSG	FSG	CDO	CDO	CDO	CDO	SiLK	SiLK	CDO	Porous
k		3.9	3.55	3.6	2.9	2.9					2.75	2.4
SRAM Cell Size	μm^2	10.26	5.59	2.09	1	0.57	0.346	0.171	1.8	0.99	0.65	0.37

International Technology Roadmap for Semiconductors

- Semiconductor Industry Association (SIA) develops and updates the International Technology Roadmap for Semiconductors (ITRS)

TABLE 7.6 Predictions from the 2007 ITRS

Year	2009	2012	2015	2018	2021
Feature size (nm)	34	24	17	12	8.4
L_{gate} (nm)	20	14	10	7	5
V_{DD} (V)	1.0	0.9	0.8	0.7	0.65
Billions of transistors/die	1.5	3.1	6.2	12.4	24.7
Wiring levels	12	12	13	14	15
Maximum power (W)	198	198	198	198	198
DRAM capacity (Gb)	2	4	8	16	32
Flash capacity (Gb)	16	32	64	128	256

Circuit Elements

- Capacitors
- Resistors
- Inductors
- Transmission Lines
- Non-volatile Memory

Capacitors

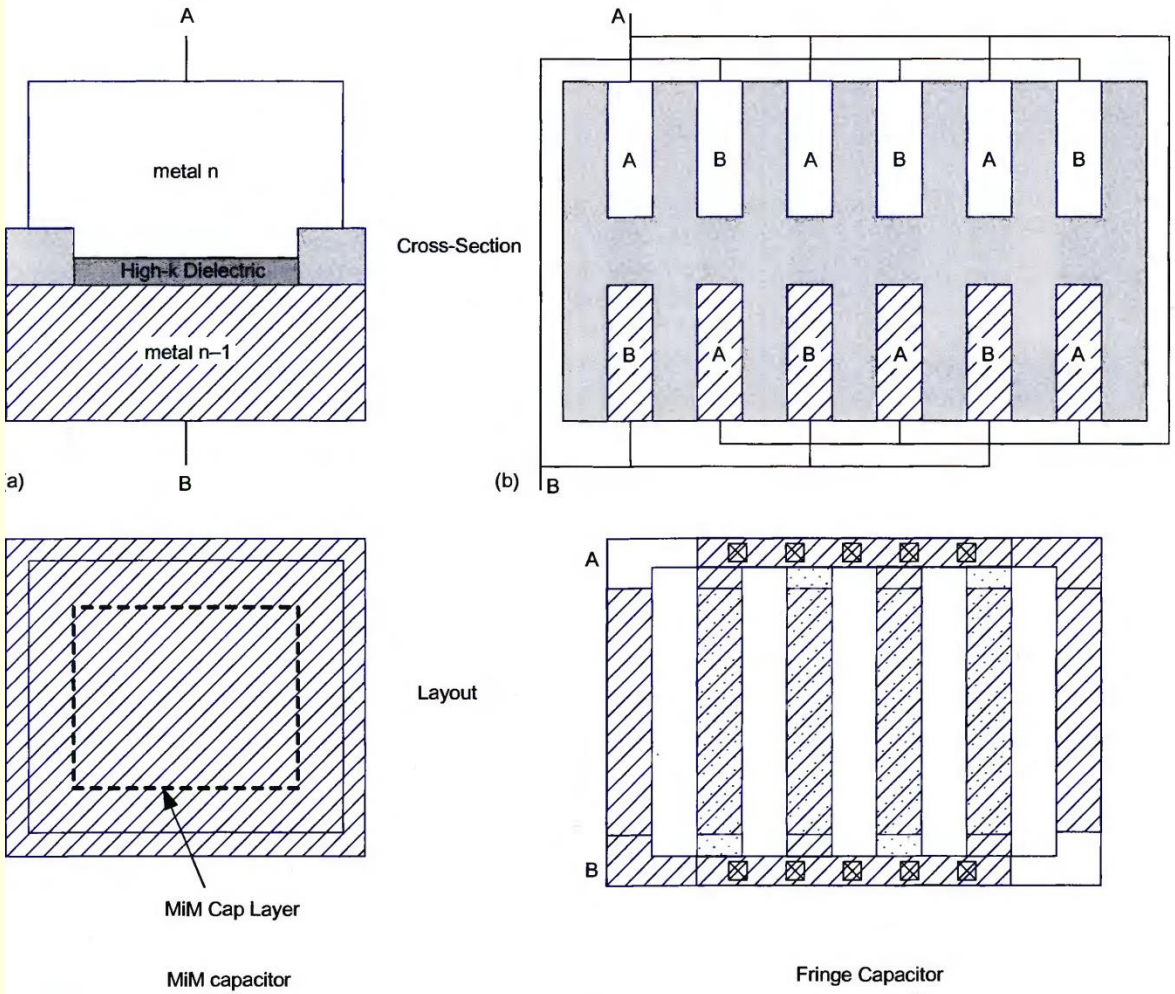
A
metal n
High-k Dielectric
metal n–1
B
(a)
Cross-Section
A
B
A
B
A
B
B
A
B
A
B
A
(b)
B
Layout
MiM Cap Layer
MiM capacitor
A
B
Fringe Capacitor

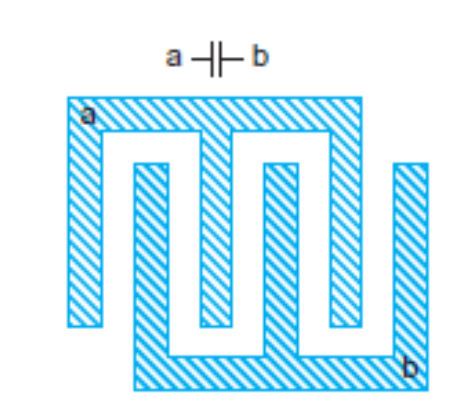
a
b
a
b

Resistors

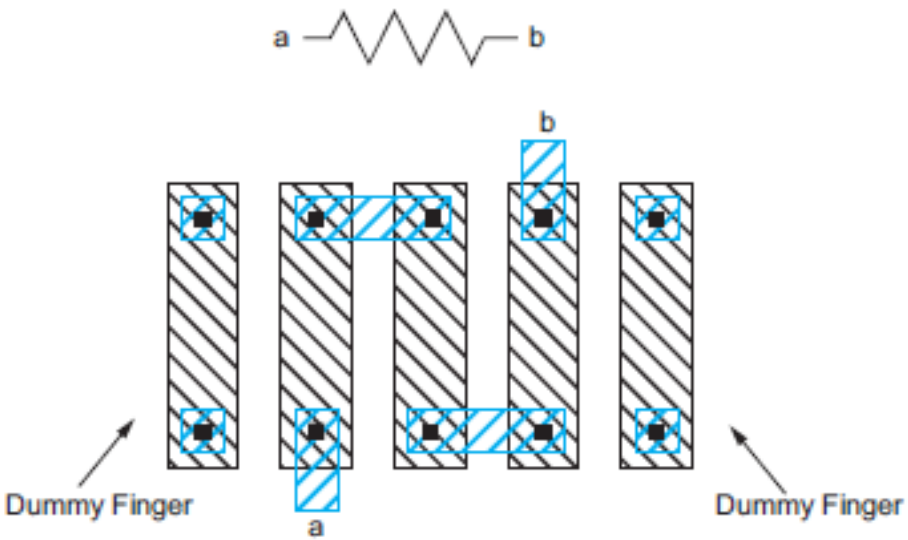

FIGURE 3.24 Resistor layout

Inductors

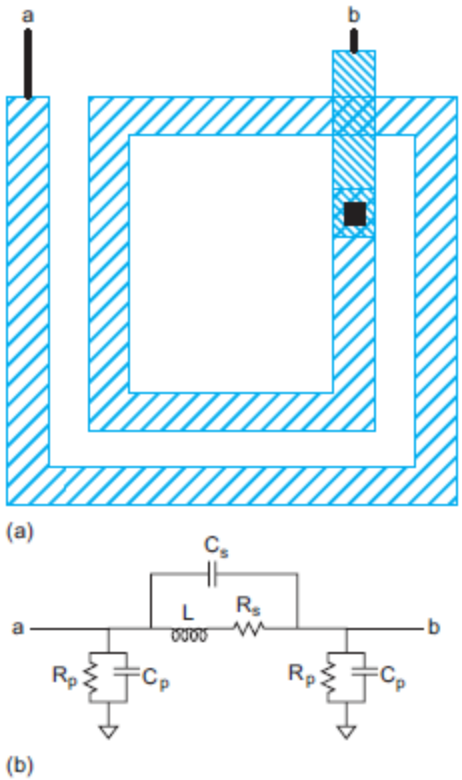

FIGURE 3.25 Typical spiral inductor and equivalent circuit [Rotella02]

Transmission Lines

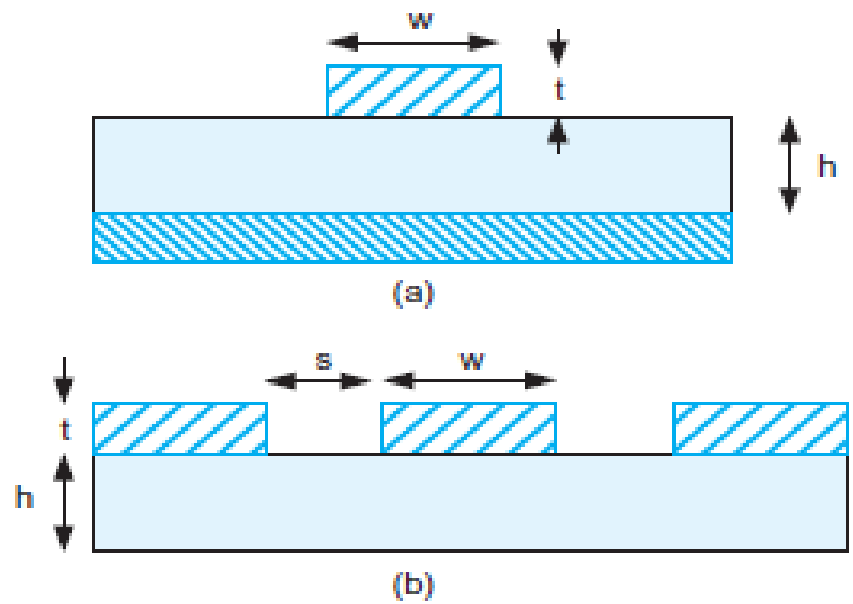

FIGURE 3.26 Microstrip and coplanar waveguide

Non-volatile Memory

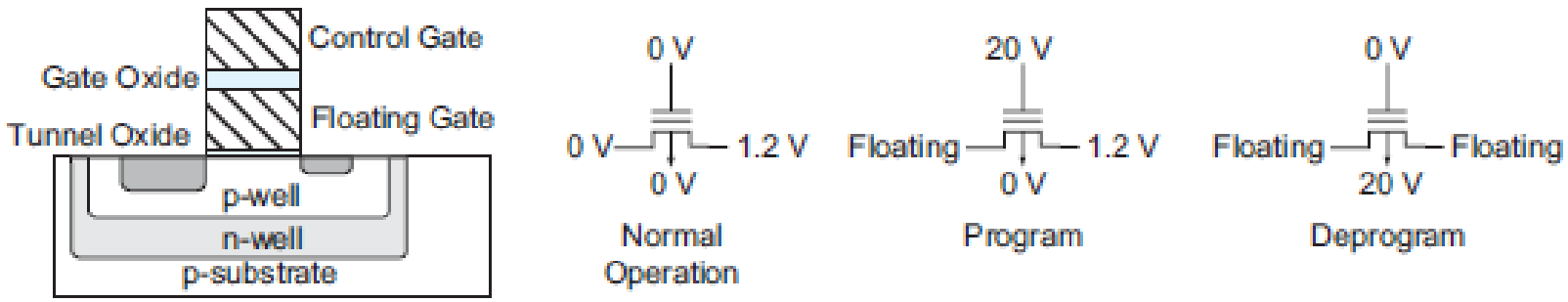

FIGURE 3.28 Flash memory construction and operation