VLSI Design

Chapter 2:
CMOS Transistor Theory

Outline

- Introduction
- MOS Capacitor
- nMOS I-V Characteristics
- pMOS I-V Characteristics
- Gate and Diffusion Capacitance
- Nonideal Transistor Behavior
  - Velocity Saturation
  - Channel Length Modulation
  - Body Effect
  - Leakage
  - Temperature Sensitivity
- Pass Transistors
- RC Delay Models
- Process and Environmental Variations
  - Process Corners

Introduction

- So far, we have treated transistors as ideal switches
- An ON transistor passes a finite amount of current
  - Depends on terminal voltages
  - Derive current-voltage (I-V) relationships
- Transistor gate, source, drain all have capacitance
  - Capacitance and current determine speed
- Also explore what a “degraded level” really means

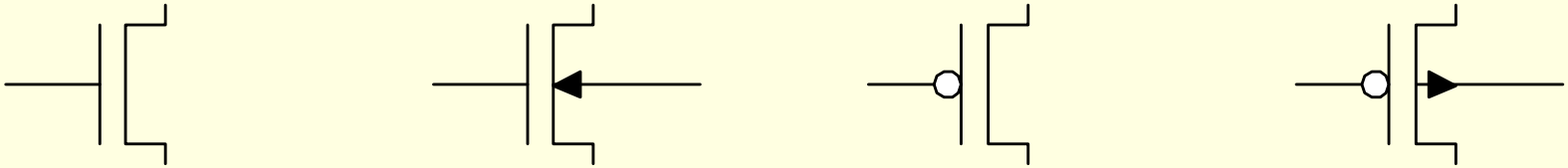

MOS Capacitor

- Gate and body form MOS capacitor
- Operating modes
  - Accumulation
  - Depletion
  - Inversion

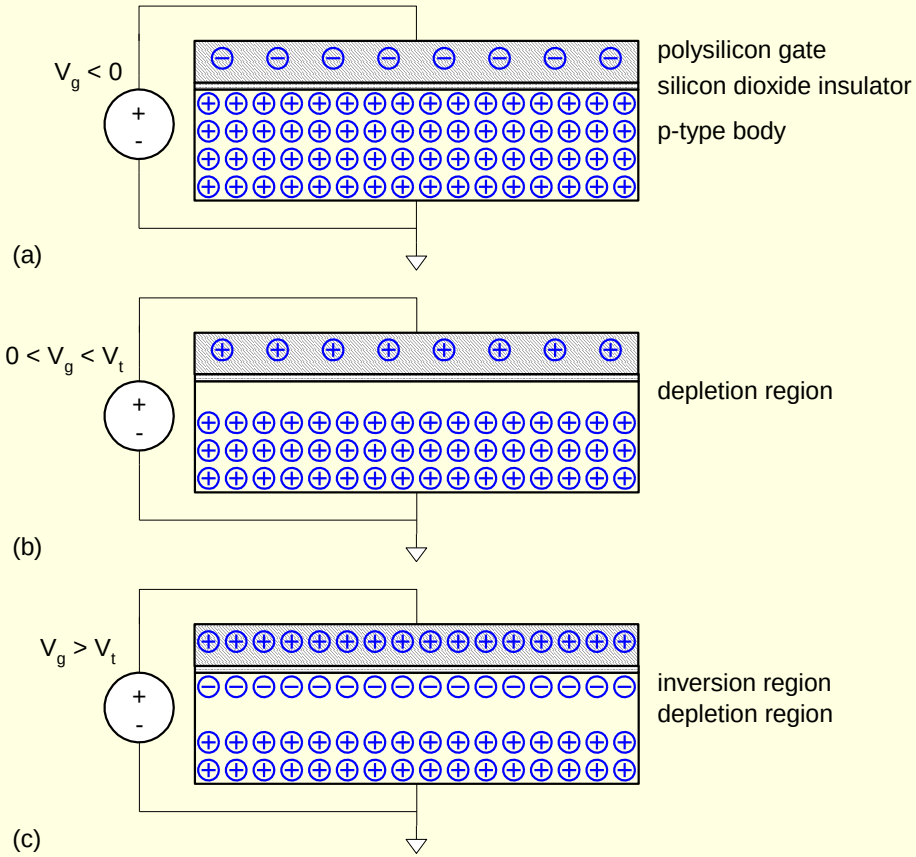

Example with an NMOS capacitor

Terminal Voltages

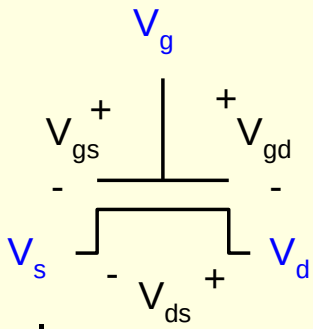

- Mode of operation depends on V_g, V_d, V_s
  - $V_{gs} = V_g – V_s$
  - $V_{gd} = V_g – V_d$
  - $V_{ds} = V_d – V_s = V_{gs} - V_{gd}$
- Source and drain are symmetric diffusion terminals
  - However, $V_{ds} \geq 0$
- NMOS <u>body</u> is grounded. First assume <u>source</u> may be grounded or may be at a voltage above ground.
- Three regions of operation
  - *Cutoff*
  - *Linear*
  - *Saturation*

NMOS Cutoff (subthreshold region)

- No channel, if $V_{gs} = 0$
- $I_{ds} = 0$

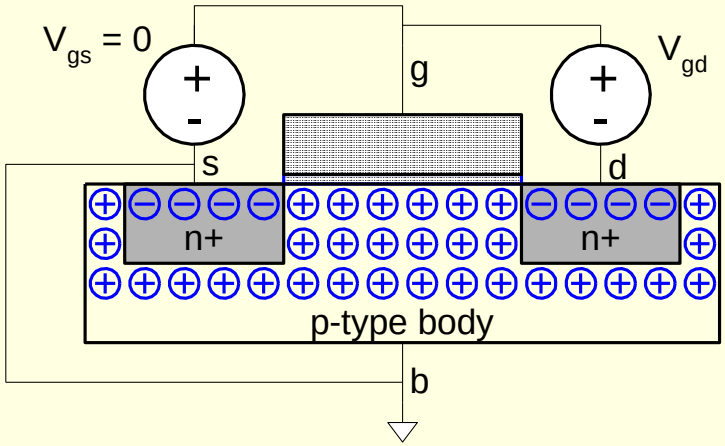

NMOS Linear

(linear/resistive/triode/nonsaturated/unsaturated)

- Channel forms if $V_{gs} > V_t$
- No Current if $V_{ds} = 0$
- $V_{gs}=V_{gd}$

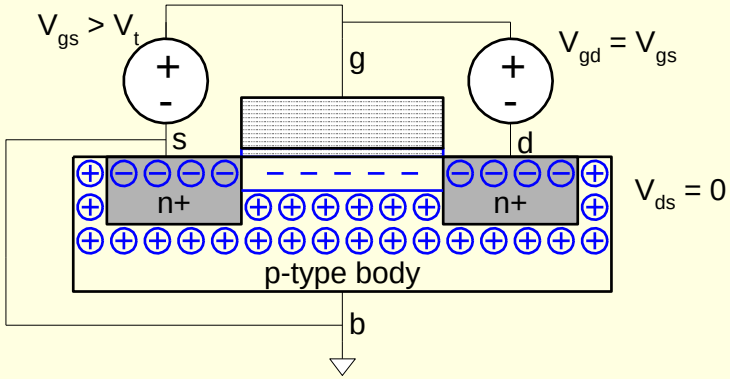

- **<u>Linear Region:</u>**
- If $V_{ds} > 0$, Current flows from d to s (e^- from s to d)
- I_{ds} increases linearly with V_{ds} if $0 < V_{ds} < V_{gs} – V_t$
- Similar to linear resistor
- $V_{gs}>V_{gd}> V_t$

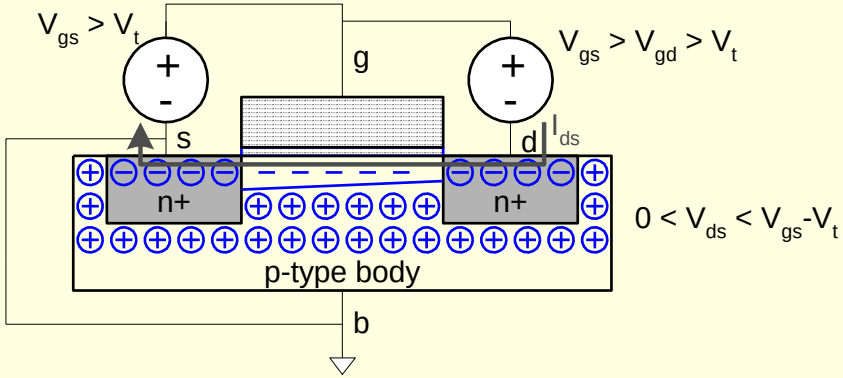

NMOS Saturation

- if $V_{gs} > V_t$
- Channel pinches off if $V_{ds} > V_{gs} – V_t$
- I_{ds} “independent” of V_{ds}, i.e., current saturates
- Similar to current source
- $V_{gd} < V_t$

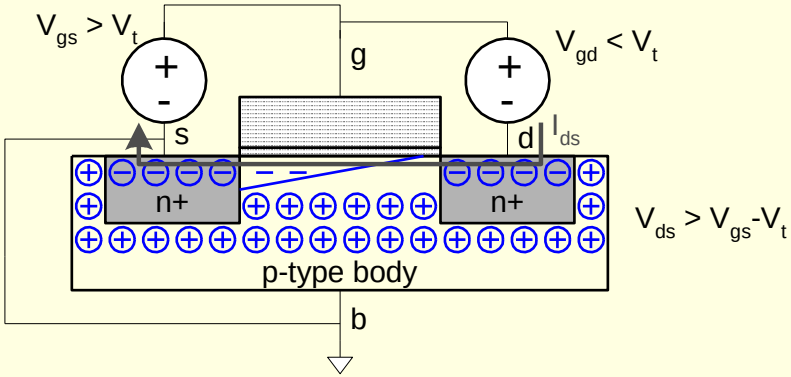

Long-Channel I-V Characteristics

- **<u>Long-channel /Ideal/First-order/Shockley model</u>**
- Channel length is long enough → lateral electric field is low
- Non-linear model → high fields, leakage and other non-idealities
- The electrons drift from source to drain at a rate proportional to the electric field between these regions.
- In Linear region, I_{ds} depends on
  - How much charge is in the channel
  - How fast is the charge moving

$$I_{ds} = \frac{Q_{\text{channel}}}{t}$$

Channel Charge

- MOS structure looks like parallel plate capacitor while operating in inversion
  - Gate – oxide (dielectric) – channel
- $Q_{channel}$ =

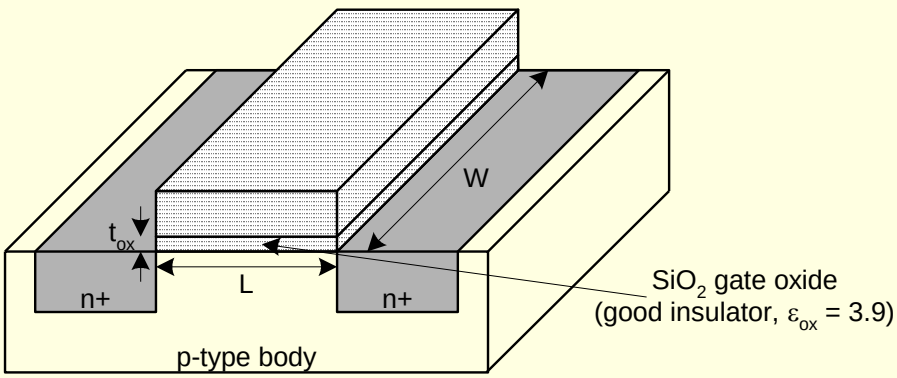

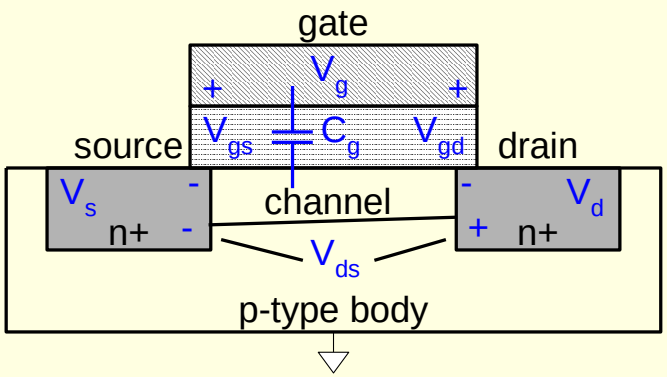

Channel Charge

- MOS structure looks like parallel plate capacitor while operating in inversion
  - Gate – oxide – channel
- $Q_{channel} = CV$
- C =

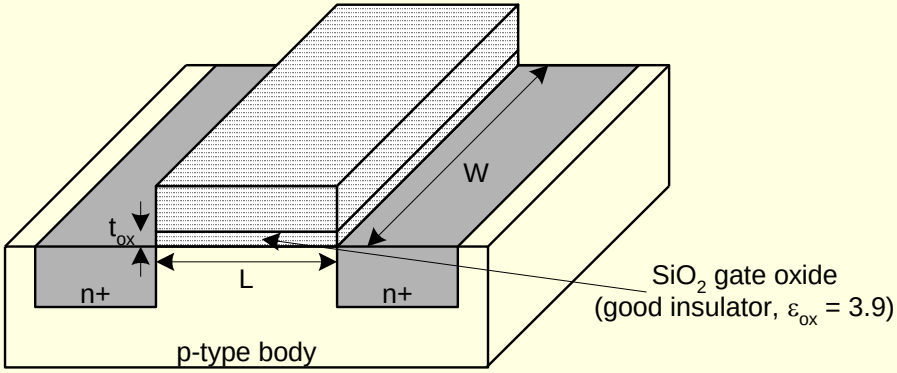

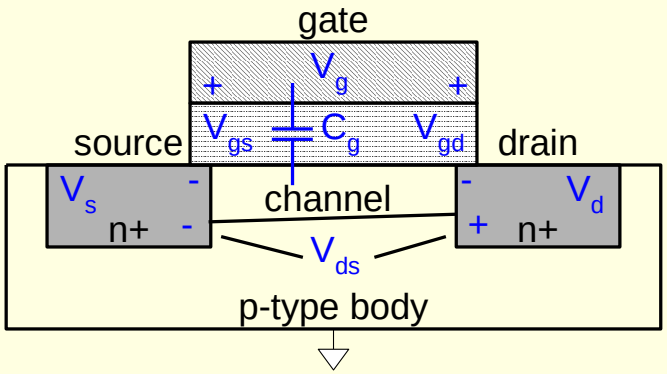

Channel Charge

- MOS structure looks like parallel plate capacitor while operating in inversion
  - Gate – oxide – channel
- $Q_{channel} = CV$
- $C = C_g = \varepsilon_{ox}WL/t_{ox} = C_{ox}WL$
- $V = V_{gc} - V_t = (V_{gs} - V_{ds}/2) - V_t$

$$\varepsilon_{ox} = 3.9\varepsilon_0$$

$$C_{ox} = \varepsilon_{ox} / t_{ox}$$

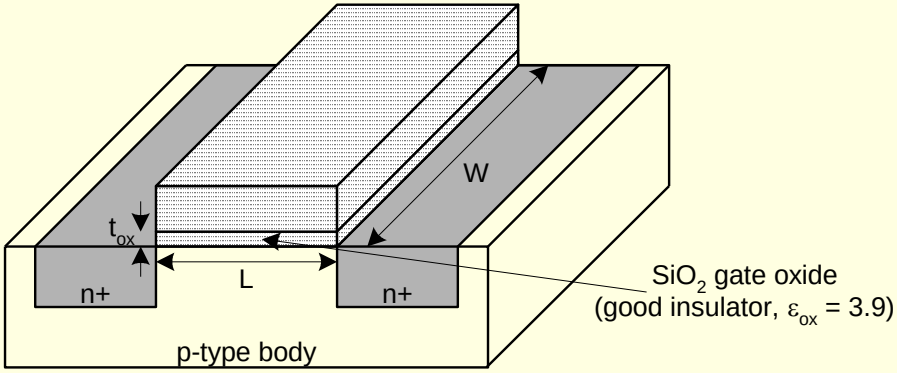

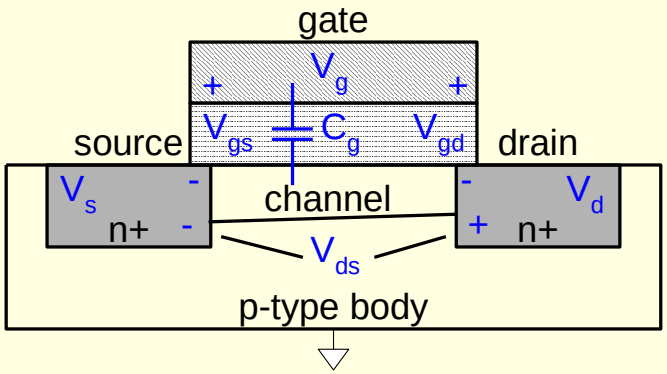

Carrier velocity

- Charge is carried by e-
- Carrier velocity *v* proportional to lateral E-field between source and drain
- $v = \mu E$ μ called mobility
- $E = V_{ds}/L$
- Time for carrier to cross channel:
  - $t = L / v$

NMOS Linear I-V

- Now we know
  - How much charge $Q_{channel}$ is in the channel
  - How much time *t* each carrier takes to cross

$$I_{ds} = \frac{Q_{\text{channel}}}{t}$$

$$= \mu C_{\text{ox}} \frac{W}{L}\left(V_{gs} - V_t - V_{ds}/2\right)V_{ds}$$

$$= \beta\left(V_{gs} - V_t - V_{ds}/2\right)V_{ds}$$

$$\beta = \mu C_{\text{ox}} \frac{W}{L}$$

NMOS Saturation I-V

- If $V_{gd} < V_t$, channel pinches off near drain
  - When $V_{ds} > V_{dsat} = V_{gs} - V_t$
- Now drain voltage no longer increases current

$$I_{ds} = \beta\left(V_{gs} - V_t - V_{dsat}/2\right)V_{dsat}$$

$$= \frac{\beta}{2}\left(V_{gs} - V_t\right)^2$$

NMOS I-V Summary

- *Shockley* 1st order transistor models (valid for Large channel devices only)

$$I_{ds} = \begin{cases} 0 & V_{gs} < V_t & \text{cutoff} \\ \beta\left(V_{gs} - V_t - V_{ds}/2\right)V_{ds} & V_{ds} < V_{dsat} & \text{linear} \\ \frac{\beta}{2}\left(V_{gs} - V_t\right)^2 & V_{ds} > V_{dsat} & \text{saturation} \end{cases}$$

Example

- For a 0.6 μm process (MOSIS site)
  - From AMI Semiconductor
  - t_{ox} = 100 Å
  - μ = 350 $cm^2/V*s$
  - V_t = 0.7 V
- Plot I_{ds} vs. V_{ds}
  - V_{gs} = 0, 1, 2, 3, 4, 5
  - Use W/L = 4/2 λ

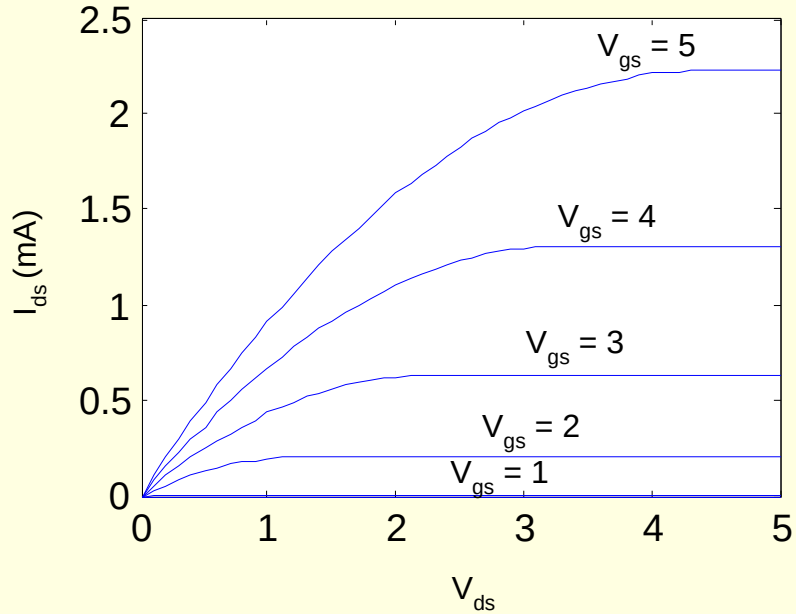

$$\beta = \mu C_{ox}\frac{W}{L} = (350)\left(\frac{3.9 \bullet 8.85 \cdot 10^{-14}}{100 \cdot 10^{-8}}\right)\left(\frac{W}{L}\right) = 120\frac{W}{L}\mu A/V^2$$

PMOS I-V

- All dopings and voltages are inverted for PMOS
- Mobility μ_p is determined by holes
  - Typically 2-3x lower than that of electrons μ_n
  - 120 $cm^2/V*s$ in AMI 0.6 μm process
- Thus PMOS must be wider to provide same current
  - In this class, assume $\mu_n / \mu_p = 2$

Capacitance

- Any two conductors separated by an insulator have capacitance
- Gate to channel capacitor is very important
  - Creates channel charge necessary for operation
- Source and drain have capacitance to body
  - Across reverse-biased diodes
  - Called diffusion capacitance because it is associated with source/drain diffusion

Gate Capacitance

- Approximate channel as connected to source
- $C_{gs} = \varepsilon_{ox}WL/t_{ox} = C_{ox}WL = C_{permicron}W$
- $C_{permicron}$ is typically about 1~2 fF/μm
- $C_{permicron}$ has fallen from about 2 fF/μm in old processes to about 1 fF/μm at the 90 and 65 nm nodes.

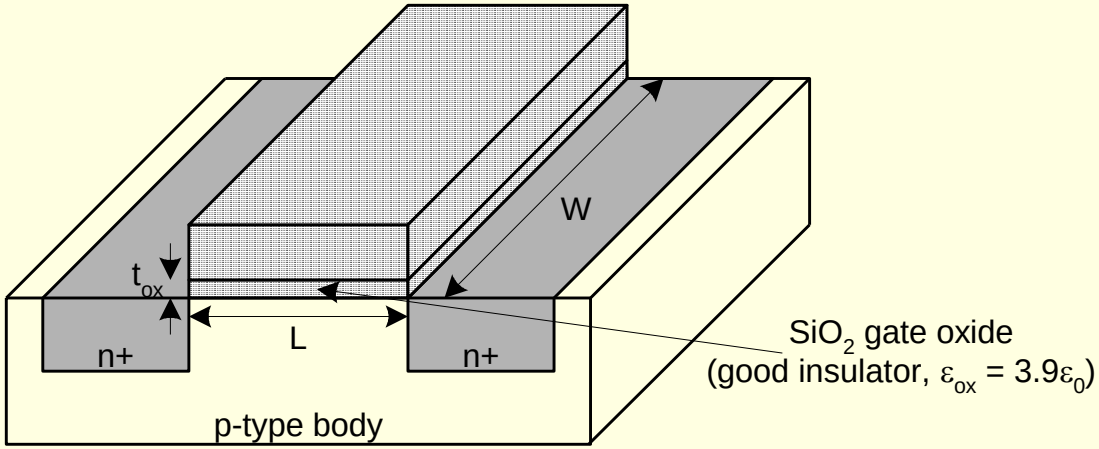

Diffusion Capacitance

- C_{sb}, C_{db}
- Undesirable, called *parasitic* capacitance
- Capacitance depends on area and perimeter
  - Use small diffusion nodes
  - Comparable to C_g for contacted diff
  - ½ C_g for uncontacted
  - Varies with process

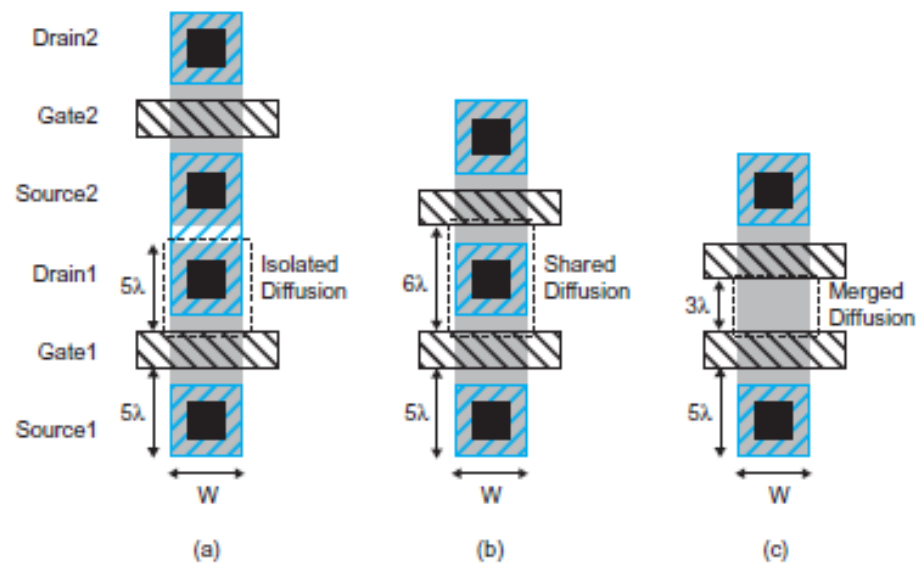

FIGURE 2.8 Diffusion region geometries

Non-Ideal IV Effects

- Figure compares the simulated I-V(non-ideal) characteristics of a 1-micron wide nMOS transistor in a 65 nm process to the ideal characteristics.

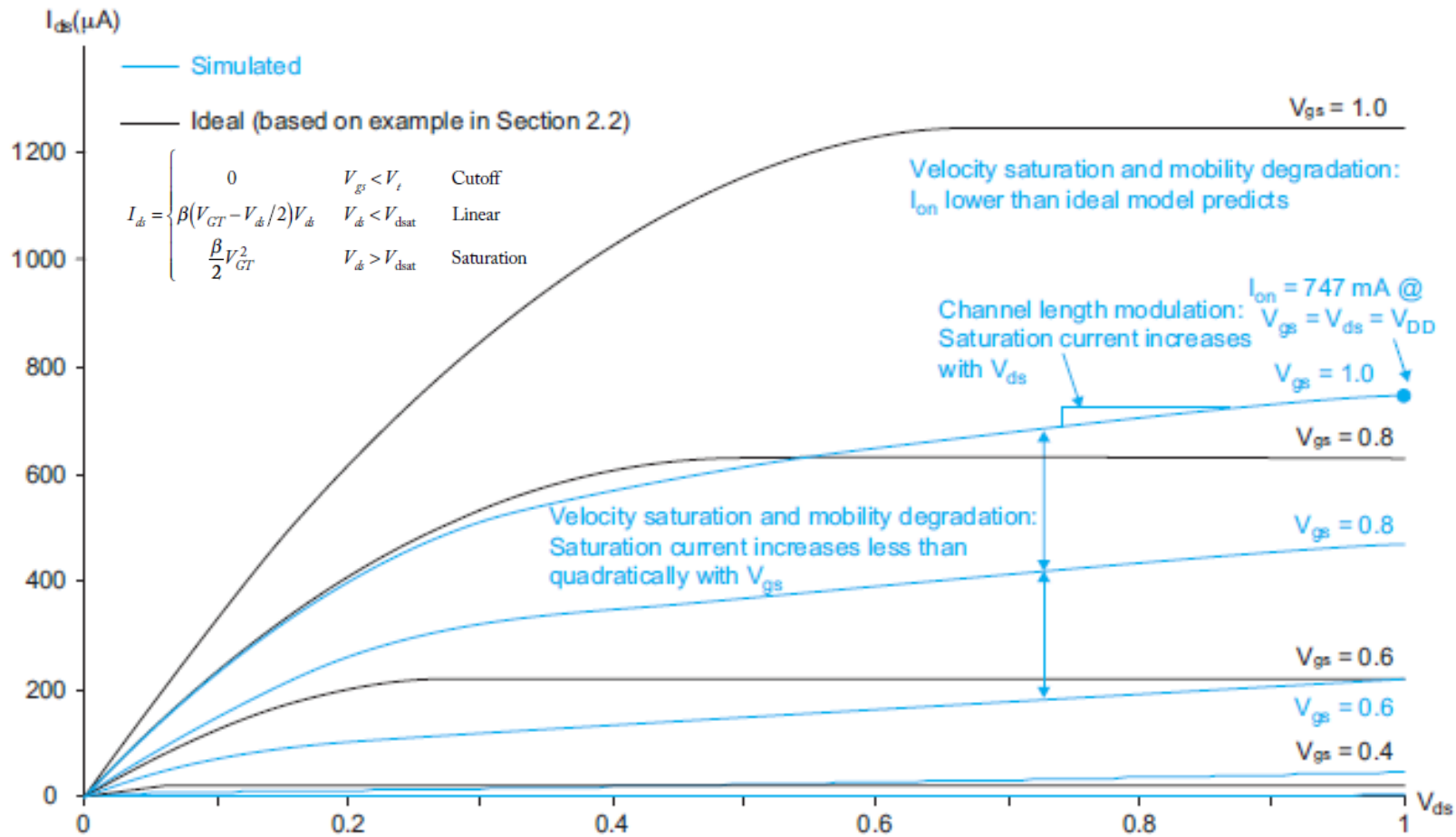

FIGURE 2.14 Simulated and ideal I-V characteristics

Non-Ideal IV Effects

- The long-channel I-V model neglects many effects that are important to devices with channel lengths below 1 micron.

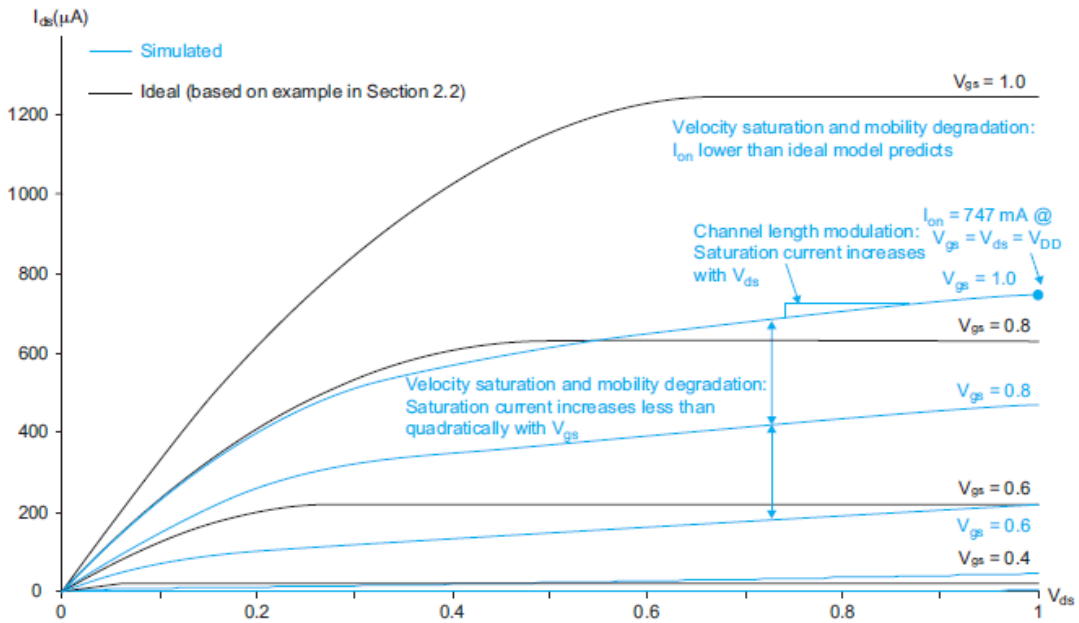

FIGURE 2.14 Simulated and ideal I-V characteristics

$$I_{ds} = \begin{cases} 0 & V_{gs} < V_t & \text{Cutoff} \\ \beta(V_{GT} - V_{ds}/2)V_{ds} & V_{ds} < V_{dsat} & \text{Linear} \\ \frac{\beta}{2}V_{GT}^2 & V_{ds} > V_{dsat} & \text{Saturation} \end{cases}$$

- The saturation current increases less than quadratically with increasing *Vgs* . This is caused by two effects: **velocity saturation** and **mobility degradation**.
- The saturation current of the nonideal transistor increases somewhat with *Vds*. This is caused by **channel length modulation**.

Cont…Non-Ideal IV Effects

- **<u>Velocity Saturation:</u>** At **high lateral field strengths (V_{ds} /L)**, carrier velocity ceases to increase linearly with field strength and results in lower I_{ds} than expected at high V_{ds} .
- **<u>Mobility Degradation:</u>** At **high vertical field strengths (V_{gs} /t_{ox})**, the carriers scatter off the oxide interface more often, slowing their progress. This leads to less current than expected at high V_{gs} .
- **<u>Channel Length Modulation:</u>**The **saturation current** of the nonideal transistor increases somewhat with V_{ds}. In which higher V_{ds} increases the size of the depletion region around the drain and thus effectively shortens the channel.

Velocity Saturation I-V Effects

- **At Low Fields (without velocity saturation):**
  - Carrier drift velocity: $v = \mu E$
  - Current (I_{ds}) is proportional to the lateral electric field ($E_{lat} = V_{ds} / L$) between source and drain.
  - Current(Ideal transistor ON current increases with V_{DD}^2):

$$I_{ds} = \mu C_{\text{ox}} \frac{W}{L} \frac{\left(V_{gs} - V_t\right)^2}{2} = \frac{\beta}{2}\left(V_{gs} - V_t\right)^2$$

- **At High Fields (with velocity saturation):**
  - Drift velocity rolls off: $$v = \frac{\mu E_{\text{lat}}}{1 + \frac{E_{\text{lat}}}{E_{\text{sat}}}}$$
  - Current ($v = v_{sat}$): $$I_{ds} = C_{\text{ox}} W (V_{gs} - V_t) v_{\text{sat}}$$
- So, the drain current is quadratically dependent on voltage without velocity saturation and linearly dependent when fully velocity saturated

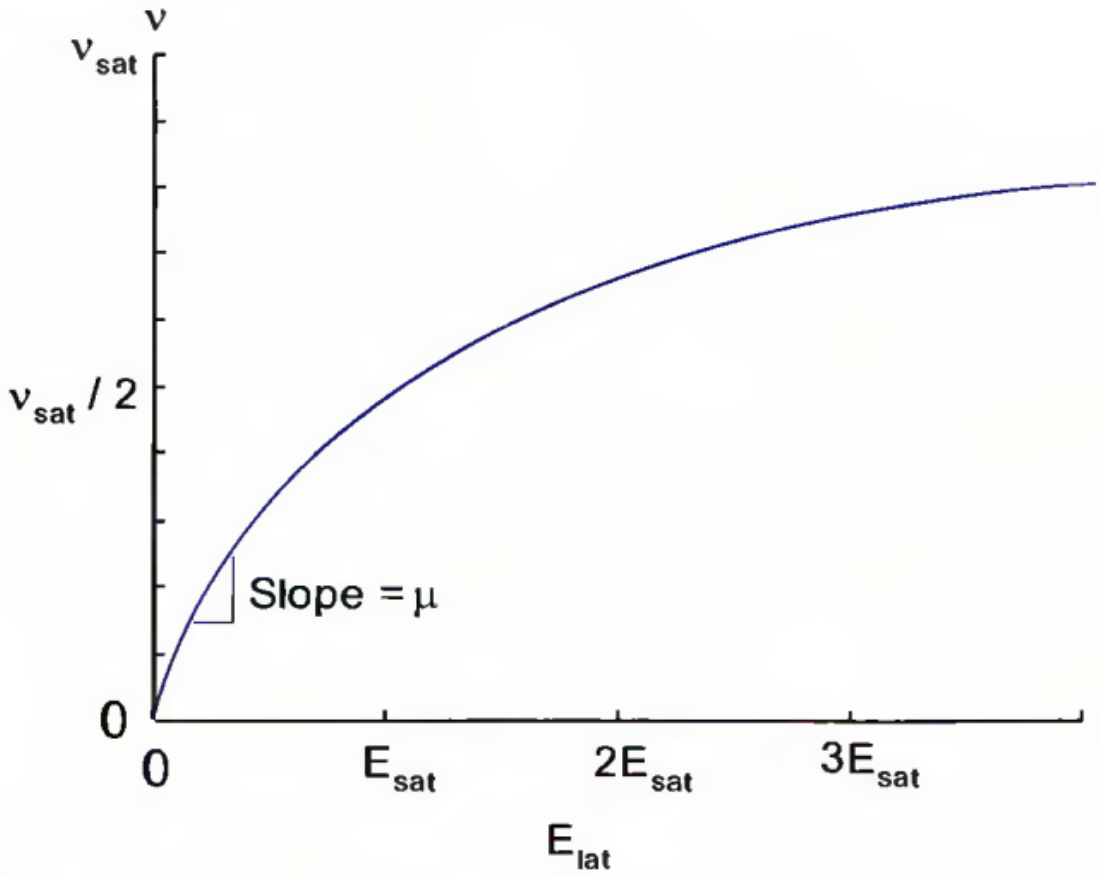

FIG 2.16 Carrier velocity vs. electric field

Channel Length Modulation

- Reverse-biased p-n junctions form a depletion region
  - Region between n and p with no carriers
  - Width of depletion L_d region grows with reverse bias
  - $L_{eff} = L - L_d$
- Shorter L_{eff} gives more current
  - I_{ds} increases with V_{ds}
  - Even in saturation

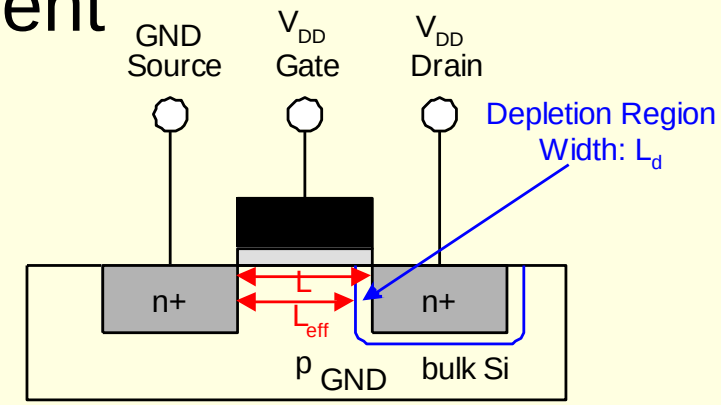

Chan Length Mod I-V

$$I_{ds} = \frac{\beta}{2}\left(V_{gs} - V_t\right)^2 \left(1 + \lambda V_{ds}\right)$$

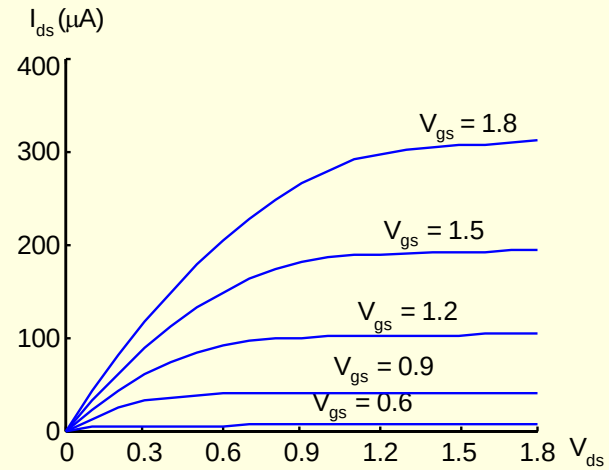

- λ = *channel length modulation coefficient*
  - not feature size
  - Empirically fit to I-V characteristics
  - very important to analog designers because it reduces the gain of amplifiers.

Threshold Voltage

- *Determined by the oxide thickness & channel doping level*
- **Increasing the potential between the *source and body*** raises the threshold through the **Body Effect**.
- **Increasing the *drain voltage*** lowers the threshold through **Drain-Induced Barrier Lowering (DIBL)**.
- **Increasing the *channel length*** raises the threshold through the **Short Channel Effect.**

Body Effect

Threshold Voltage: Threshold Voltage (V_t) is gate voltage necessary to invert channel

- **Increasing the potential between the source and body** raises the threshold through the **body effect**. Increase in V_t with V_s is called the *body effect*

Body Effect Model

$$V_t = V_{t0} + \gamma\left(\sqrt{\phi_s + V_{sb}} - \sqrt{\phi_s}\right)$$

- ϕ_s = *surface potential* at threshold

$$\phi_s = 2v_T \ln \frac{N_A}{n_i}$$

  - Depends on:
    - doping level N_A
    - Intrinsic carrier concentration n_i
- γ = *body effect coefficient*

$$\gamma = \frac{t_{ox}}{\varepsilon_{ox}} \sqrt{2q\varepsilon_{si} N_A} = \frac{\sqrt{2q\varepsilon_{si} N_A}}{C_{ox}}$$

Leakage Sources

- *Several sources of leakage result in current flow in nominally OFF transistors:*
- Subthreshold conduction
  - Transistors can’t abruptly turn ON or OFF
  - Biggest source in modern transistors
- Junction leakage
  - Reverse-biased PN junction diode current
- Gate leakage
  - Tunneling through ultrathin gate dielectric

Subthreshold Conduction or OFF Transistor Behaviour

- What about current in cutoff?
- Simulated results
- What differs? (Current doesn't go to 0 in cutoff)

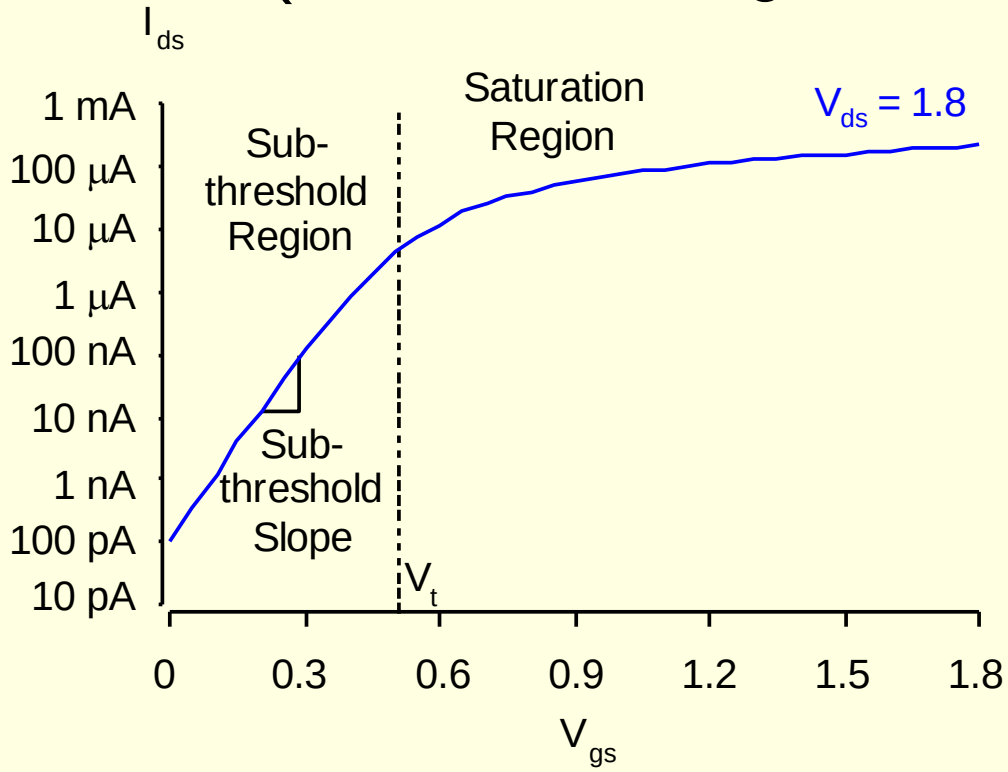

Subthreshold Leakage

- Subthreshold leakage exponential with V_{gs}

$$I_{ds} = I_{ds0} e^{\frac{V_{gs}-V_t}{nv_T}} \left(1 - e^{\frac{-V_{ds}}{v_T}}\right)$$

$$I_{ds0} = \beta v_T^2 e^{1.8}$$

- I_{ds0} is the current at threshold and is process dependent and device geometry
- n is process dependent, typically 1.4-1.5

DIBL (Drain-Induced Barrier Lowering)

- **Increasing the drain voltage** lowers the threshold through <u>drain-induced barrier lowering.</u>
  - Drain voltage also affect V_t

$$V_t' = V_t - \eta V_{ds}$$

where η is the DIBL coefficient, typically on the order of 0.1

  - High drain voltage causes subthreshold leakage to increase.

Junction Leakage

- Reverse-biased p-n junctions have some leakage

$$I_D = I_S\left(e^{\frac{V_D}{v_T}} - 1\right)$$

- I_s depends on doping levels
  - And area and perimeter of diffusion regions
  - Typically < 1 fA/μm^2

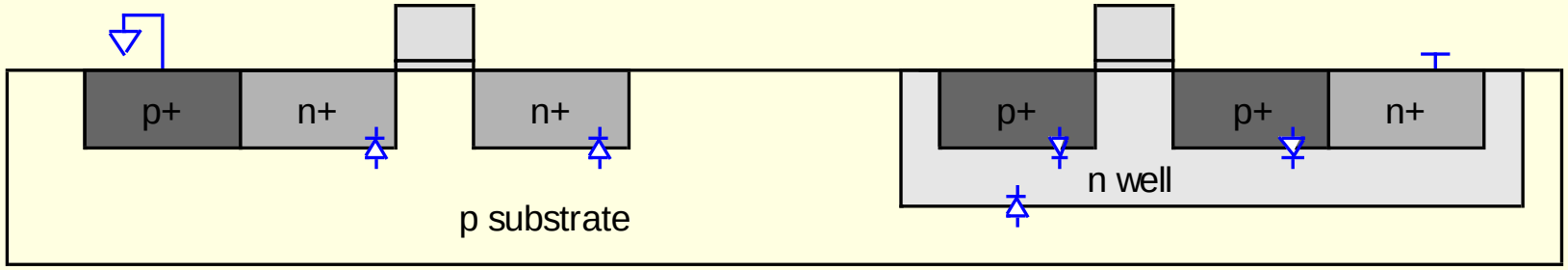

Gate Leakage

- Carriers may tunnel thorough very thin gate oxides
- Predicted tunneling current (from [Song01])

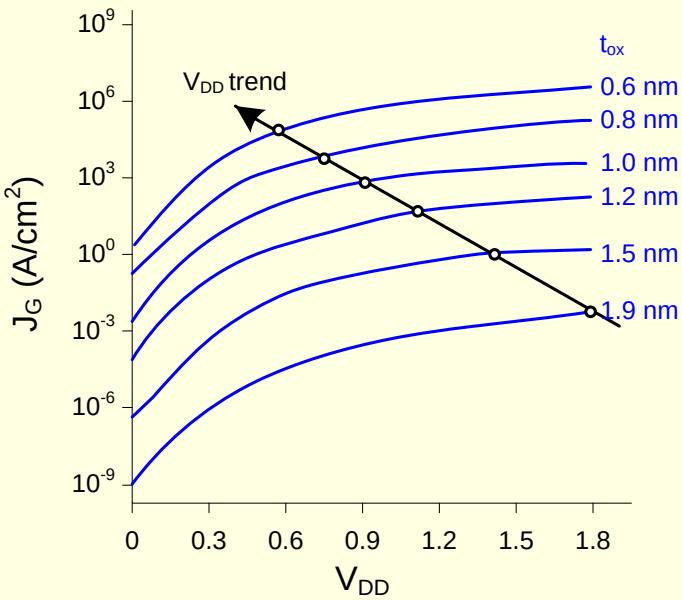

- Negligible for older processes
- May soon be critically important

Rising Temperature

MOS characteristics degrade with Temperature:

Both mobility and threshold voltage decrease with rising temperature.

- The **mobility effect** tends to dominate for strongly ON transistors:
  - resulting in lower I_{ds} at high temperature
- The **threshold effect** is most important for OFF transistors:
  - resulting in higher leakage current at high temperature

Temperature Sensitivity

- Increasing temperature
  - Reduces mobility
  - Reduces V_t
- I_{ON} decreases with temperature
- I_{OFF} increases with temperature

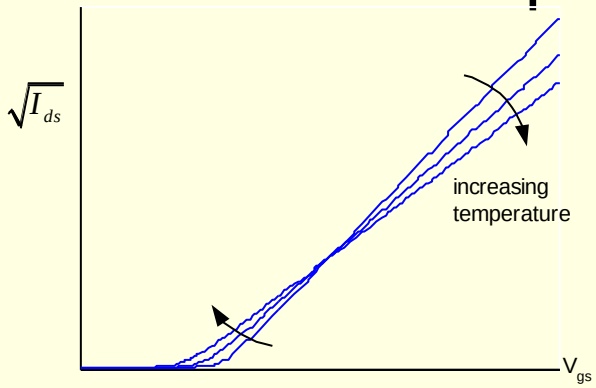

DC Transfer Characteristic

- Digital circuits are merely analog circuits
- DC transfer characteristics relate the output voltage to the input voltage
- Assuming the input changes slowly enough that capacitances have plenty of time to charge or discharge.
- Specific ranges of input and output voltages are defined as valid 0 and 1 logic levels.

Static CMOS Inverter DC Characteristics

- As the source of the nMOS transistor is grounded, $V_{gsn} = V_{in}$ and $V_{dsn} = V_{out}$
- As the source of the pMOS transistor is tied to V_{DD}, $V_{gsp} = V_{in} - V_{DD}$ and $V_{dsp} = V_{out} - V_{DD}$

	Cutoff	Linear	Saturated
nMOS	$V_{gsn} < V_{tn}$	$V_{gsn} > V_{tn}$	$V_{gsn} > V_{tn}$
	$V_{in} < V_{tn}$	$V_{in} > V_{tn}$	$V_{in} > V_{tn}$
		$V_{dsn} < V_{gsn} - V_{tn}$	$V_{dsn} > V_{gsn} - V_{tn}$
		$V_{out} < V_{in} - V_{tn}$	$V_{out} > V_{in} - V_{tn}$
pMOS	$V_{gsp} > V_{tp}$	$V_{gsp} < V_{tp}$	$V_{gsp} < V_{tp}$
	$V_{in} > V_{tp} + V_{DD}$	$V_{in} < V_{tp} + V_{DD}$	$V_{in} < V_{tp} + V_{DD}$
		$V_{dsp} > V_{gsp} - V_{tp}$	$V_{dsp} < V_{gsp} - V_{tp}$
		$V_{out} > V_{in} - V_{tp}$	$V_{out} < V_{in} - V_{tp}$

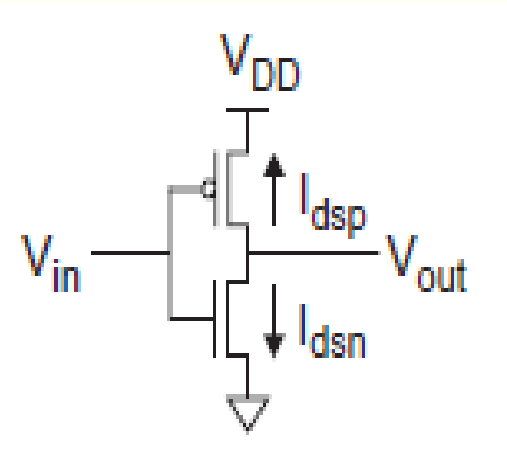

DC Response (V_{out} vs. V_{in} for a gate)

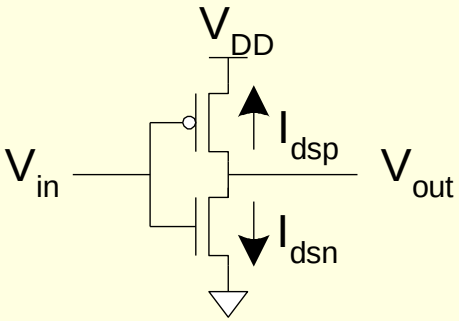

- Ex: **Inverter**
  - When $V_{in} = 0$ → $V_{out} = V_{DD}$
  - When $V_{in} = V_{DD}$ → $V_{out} = 0$
  - In between, V_{out} depends on transistor size and current
  - Constraints:
    - $I_{dsn} = |I_{dsp}|$
    - $\beta_p = \beta_n$ (pMOS is 2-3 times as wide as nMOS)
    - $V_{tn} = |V_{tp}|$
  - We could solve equations
  - But graphical solution gives more insight

Transistor Operation

- Current depends on region of transistor behavior
- For what V_{in} and V_{out} are nMOS and pMOS in
  - Cutoff?
  - Linear?
  - Saturation?

I-V Characteristics

- Make pMOS is wider than nMOS such that $\beta_n = \beta_p$
- Plot shows I_{dsn} and I_{dsp} in terms of V_{dsn} and V_{dsp} for various values of V_{gsn} and V_{gsp}

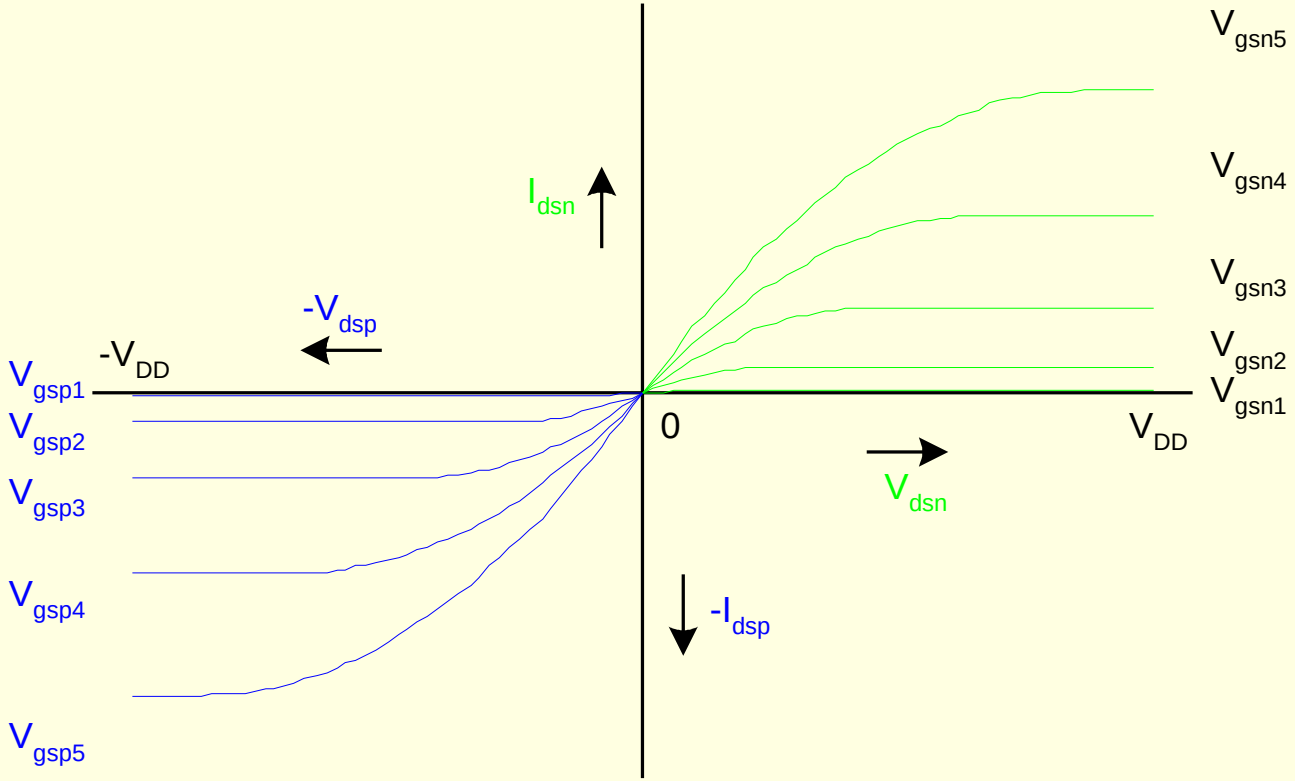

Current vs. V_{out}, V_{in}

- Figure shows the same plot of I_{dsn} and $|I_{dsp}|$ now in terms of V_{out} for various values of V_{in}

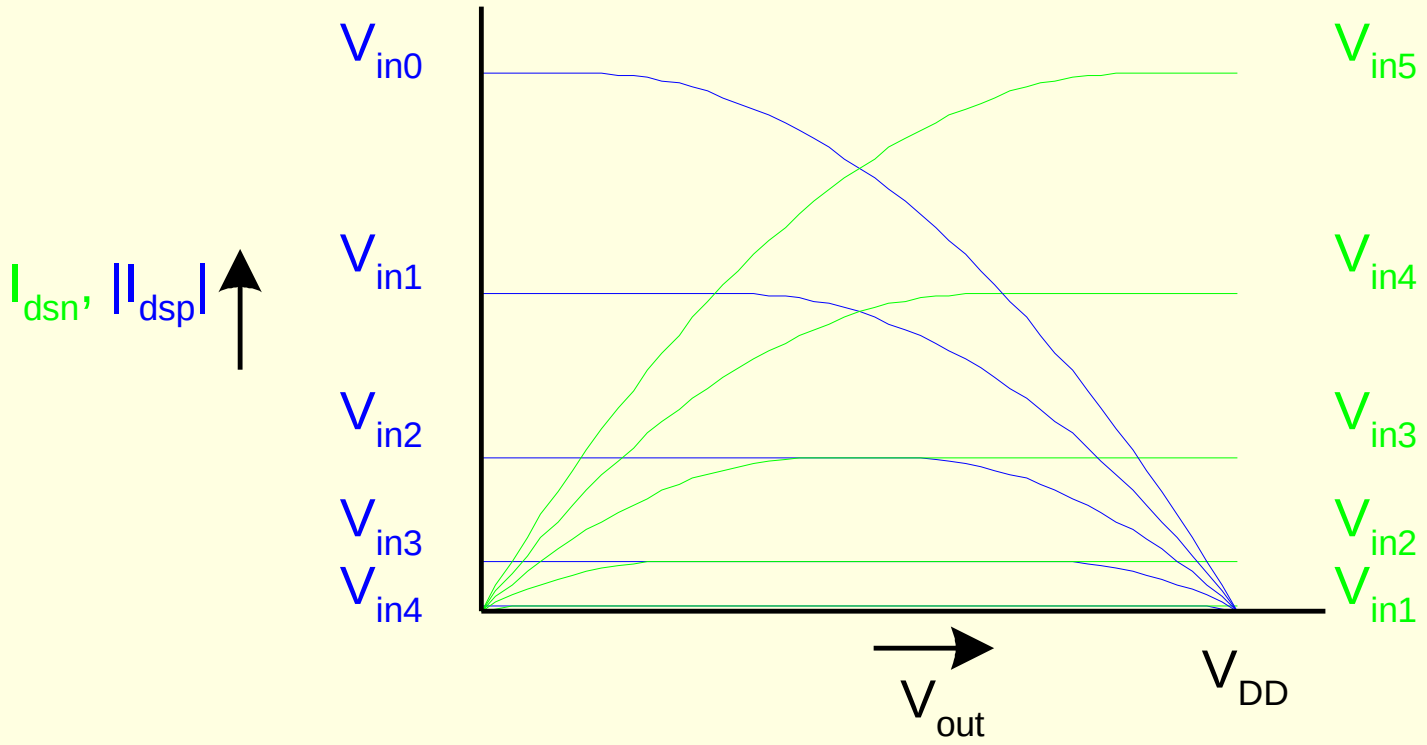

Load Line Analysis

- For a given V_{in}:
  - Plot I_{dsn}, I_{dsp} vs. V_{out}
  - V_{out} must be where |currents| are equal in

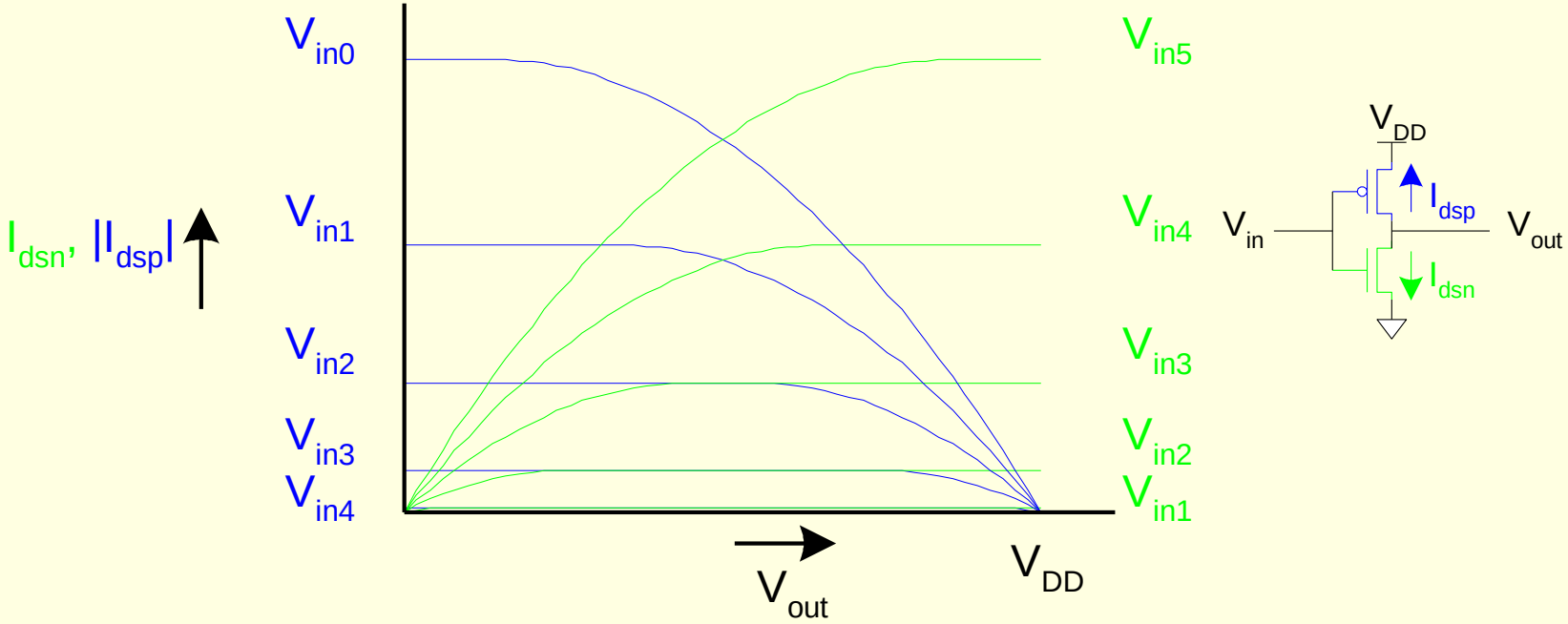

Load Line Analysis

- $V_{in} = 0$

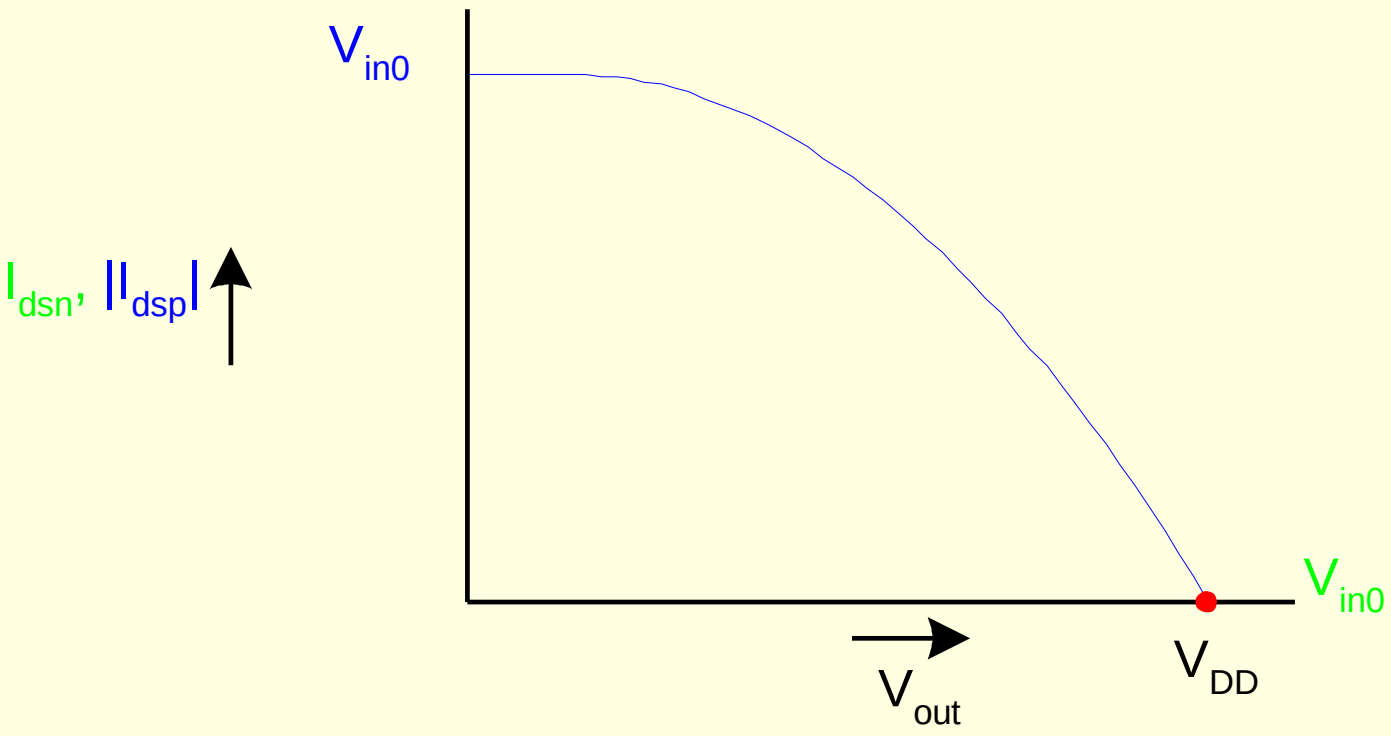

Load Line Analysis

- $V_{in} = 0.2V_{DD}$

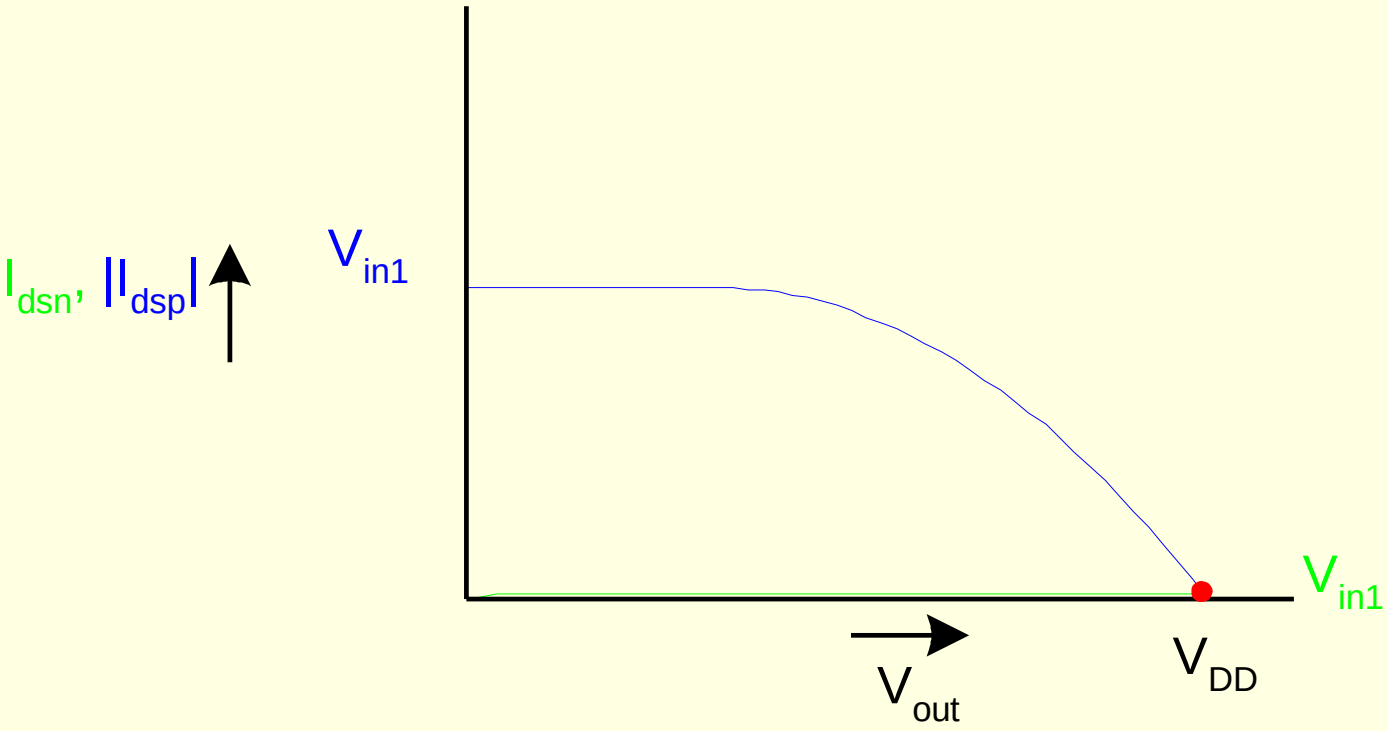

Load Line Analysis

- $V_{in} = 0.4V_{DD}$

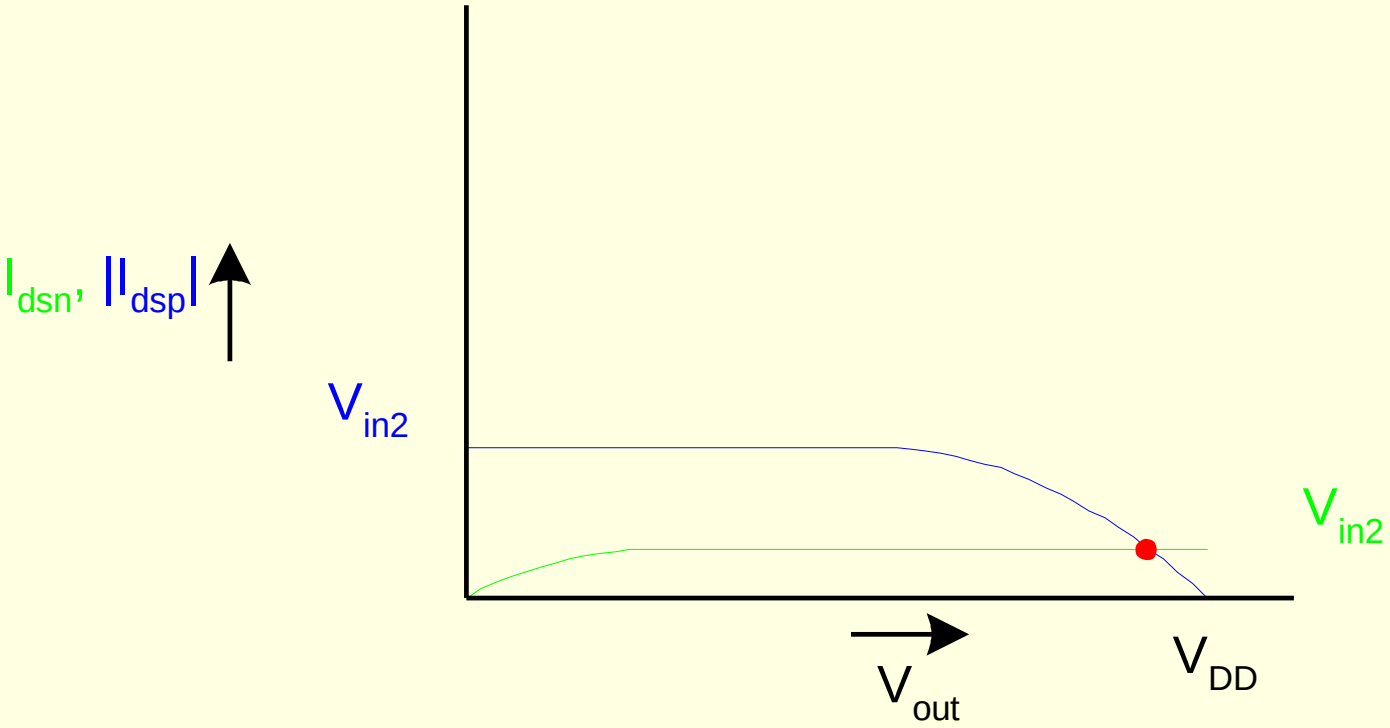

Load Line Analysis

- $V_{in} = 0.6V_{DD}$

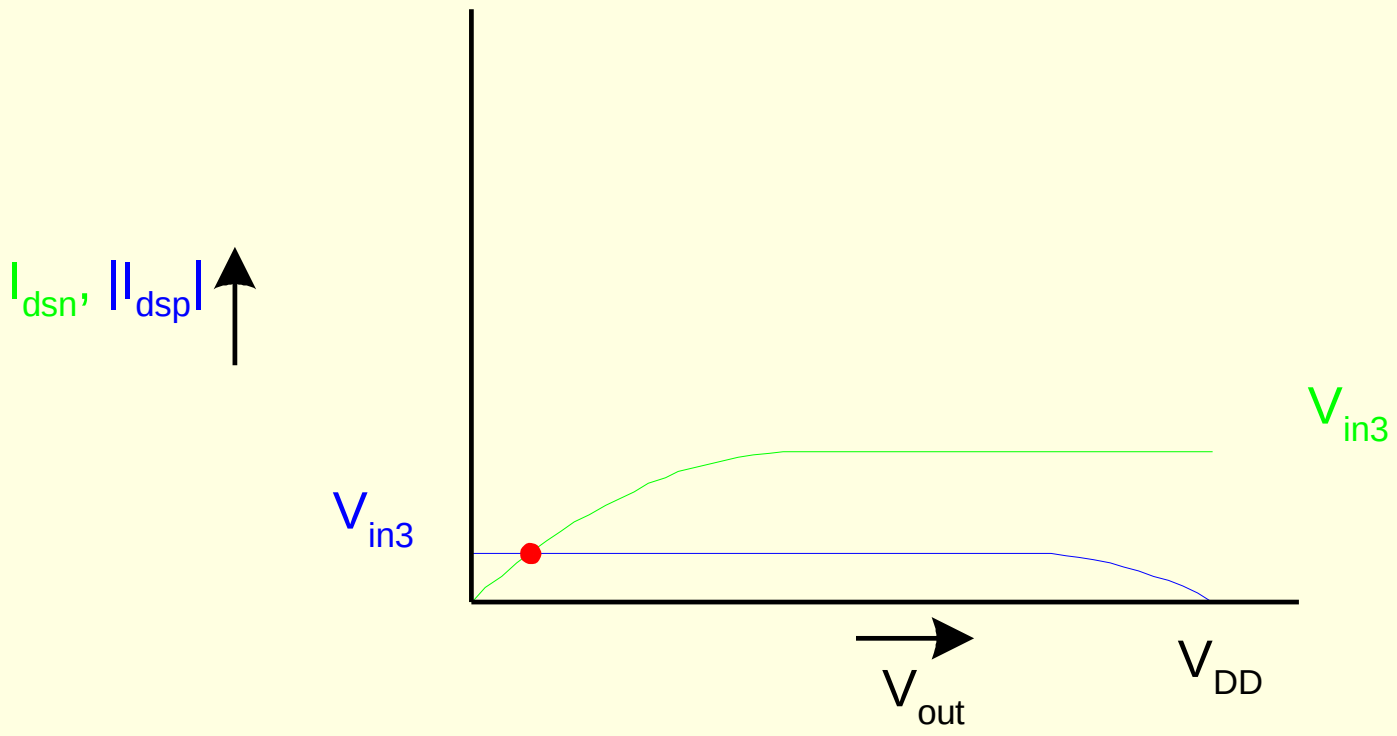

Load Line Analysis

- $V_{in} = 0.8V_{DD}$

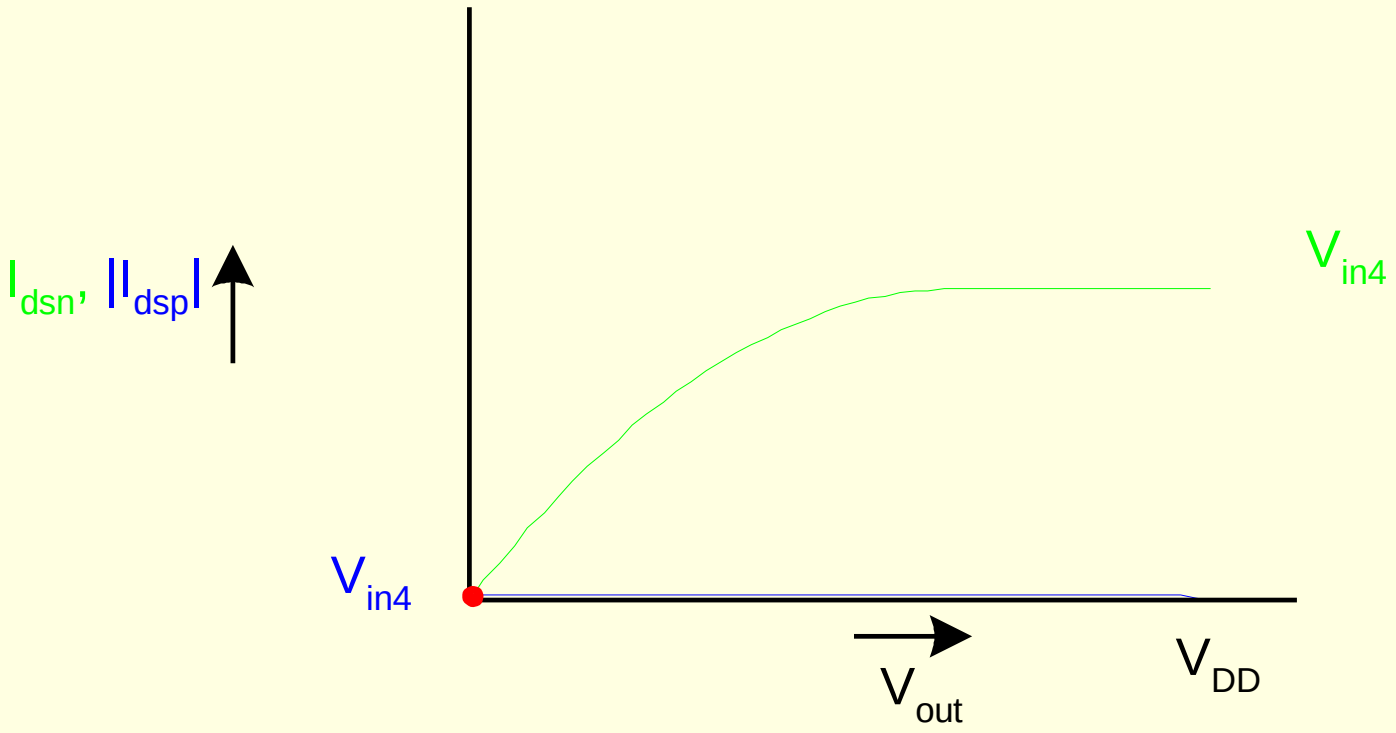

Load Line Analysis

- $V_{in} = V_{DD}$

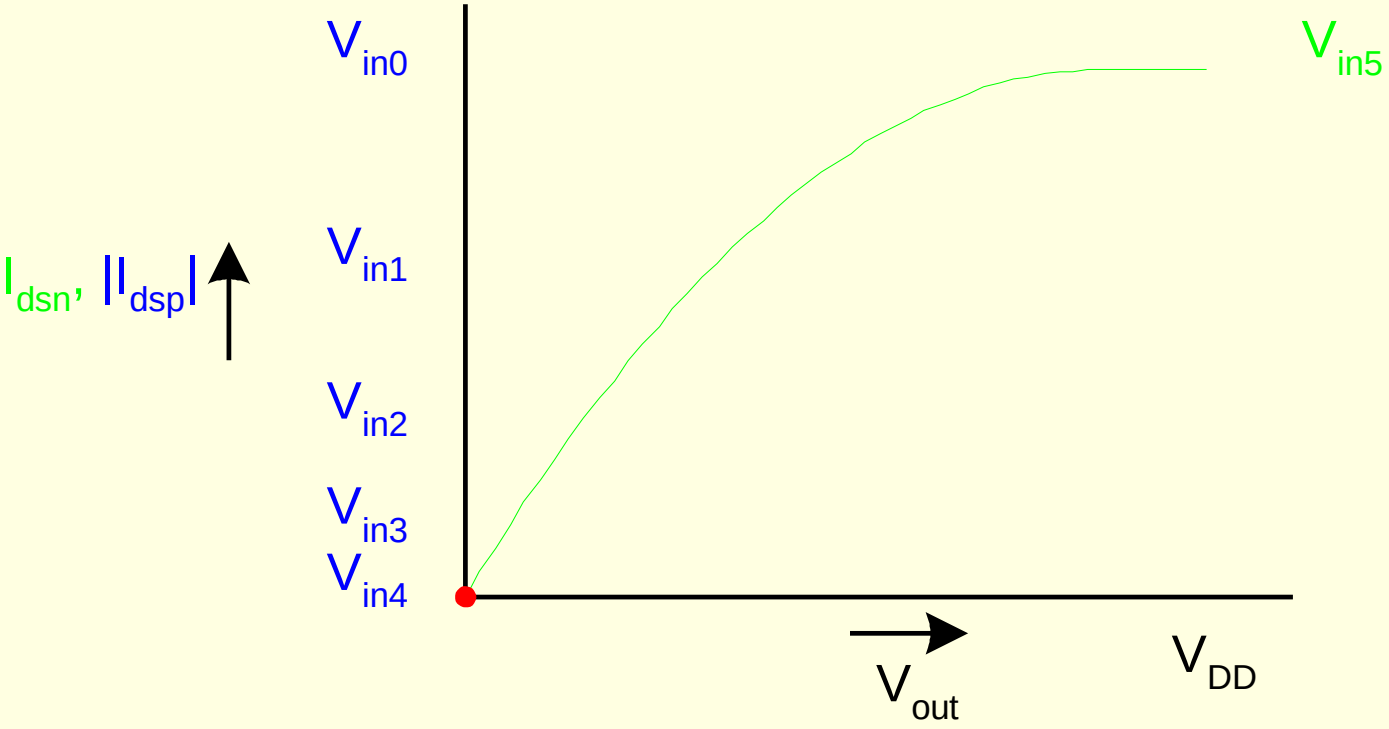

Load Line Summary

- The possible operating points of the inverter, marked with dots, are the values of V_{out} where $I_{dsn} = |I_{dsp}|$ for a given value of V_{in}

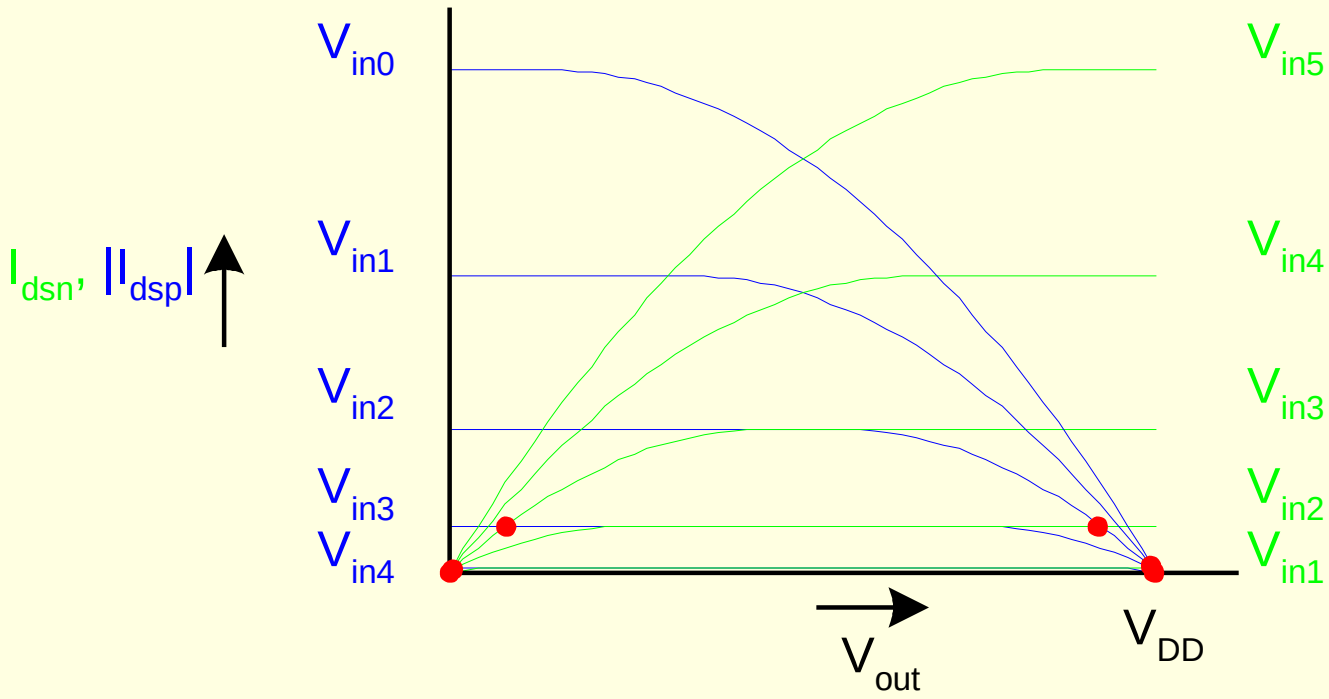

DC Transfer Curve

- The operating points are plotted on V_{out} vs. V_{in} axes in Figure (c) to show the inverter DC transfer characteristics
- The supply current $I_{DD} = I_{dsn} = |I_{dsp}|$ is also plotted against V_{in} in Figure (d)

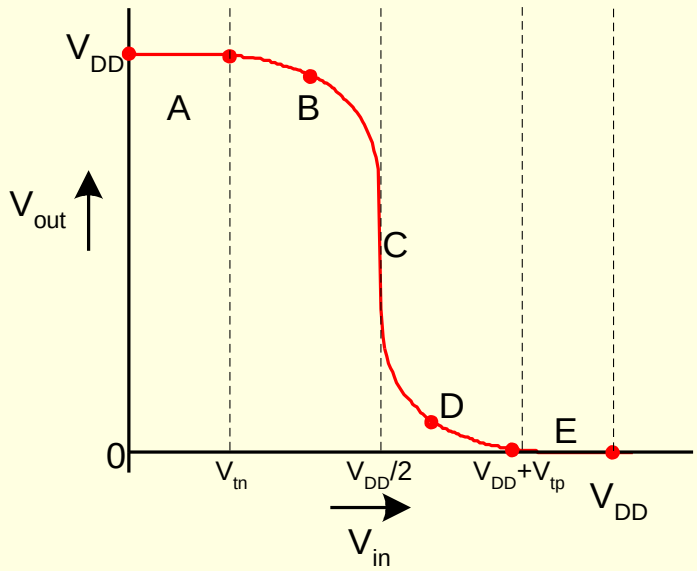

(c)

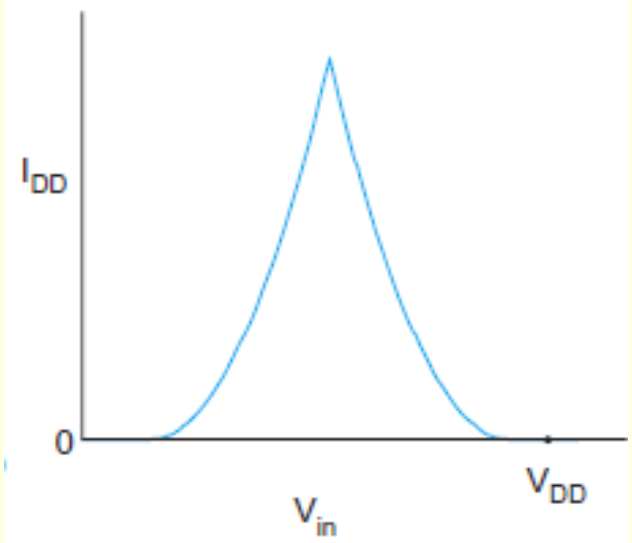

(d)

Operating Regions

- Revisit transistor operating regions

Region	nMOS	pMOS
A	Cutoff	Linear
B	Saturation	Linear
C	Saturation	Saturation
D	Linear	Saturation
E	Linear	Cutoff

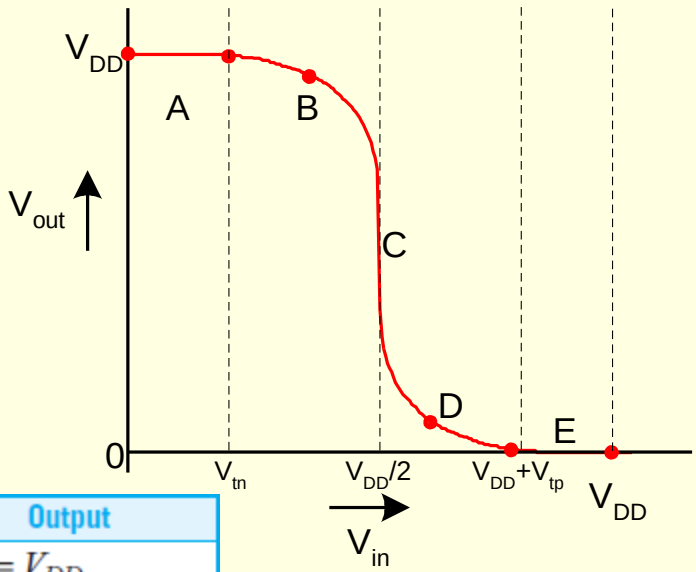

Region	Condition	p-device	n-device	Output
A	$0 \le V_{in} < V_{tn}$	linear	cutoff	$V_{out} = V_{DD}$
B	$V_{tn} \le V_{in} < V_{DD}/2$	linear	saturated	$V_{out} > V_{DD}/2$
C	$V_{in} = V_{DD}/2$	saturated	saturated	V_{out} drops sharply
D	$V_{DD}/2 < V_{in} \le V_{DD} - \lvert V_{tp} \rvert$	saturated	linear	$V_{out} < V_{DD}/2$
E	$V_{in} > V_{DD} - \lvert V_{tp} \rvert$	cutoff	linear	$V_{out} = 0$

CMOS Inverter Switching Characteristics…Definitions

- **Rise time t_r =** time required for a node to charge from the 10% point to 90% point
- **Fall time t_f =** time required for a node to discharge from 90% to 10% point
- **Delay time t_d =** delay from the 50% point on the input to the 50% point on the output
- **Falling delay t_{df} =** delay time with output falling
- **Rising delay t_{dr} =** delay time with output rising

CMOS Inverter Switching Characteristics

- The switching speed of a CMOS gate is limited by the time taken to charge and discharge the load capacitance C_L.
- An input transition results in an output transition that either charges C_L toward V_{DD} or discharges C_L toward V_{SS}.

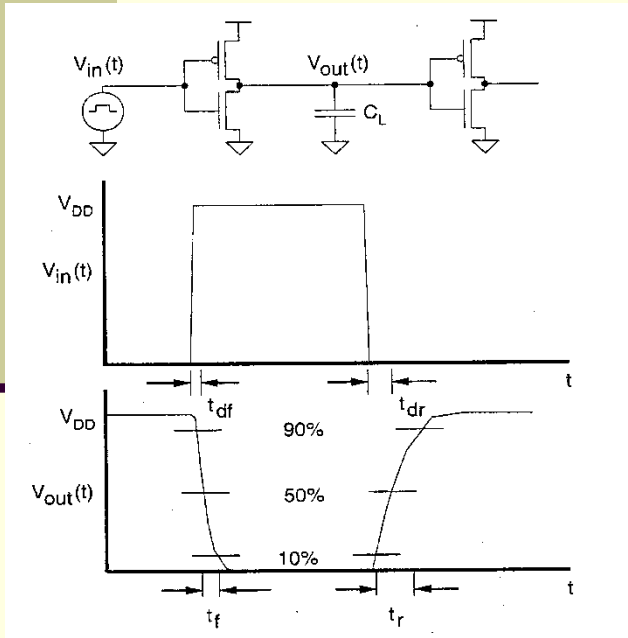

Region	nMOS	pMOS
A	Cutoff	Linear
B	Saturation	Linear
C	Saturation	Saturation
D	Linear	Saturation
E	Linear	Cutoff

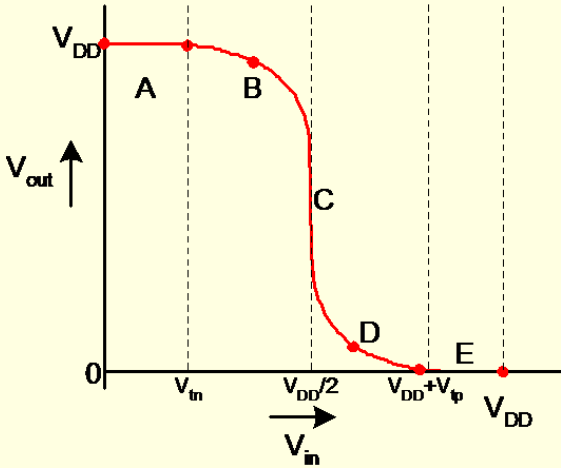

Beta Ratio ($\beta = \mu C_{ox} \frac{W}{L}$)

- For $\beta_p = \beta_n$, the **inverter threshold voltage** V_{inv} is $V_{DD}/2$.
- Desirable →maximizes **noise margins** and allows a **capacitive load** to charge and discharge in equal times by providing equal current source and sink capabilities.
- Inverters with different beta ratios $r = \beta_p / \beta_n$ are called **skewed inverters**.
- If $\beta_p / \beta_n \neq 1$, **switching point** will move from $V_{DD}/2$.
- If $r > 1$, the inverter is **HI-skewed**.
- If $r < 1$, the inverter is **LO-skewed**.
- If $r = 1$, inverter is **normal skew/ unskewed**.

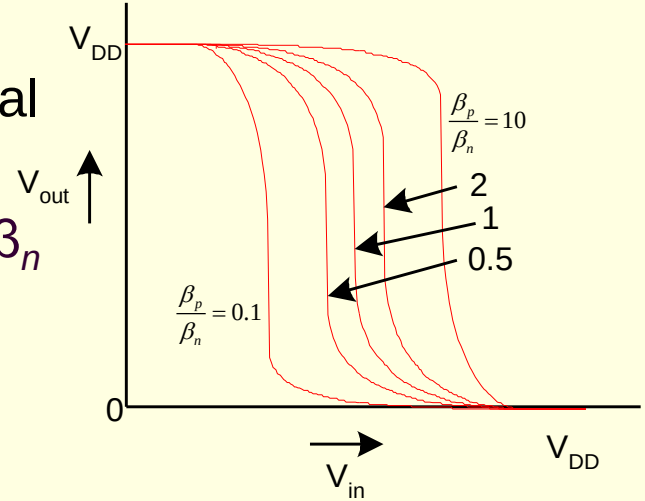

Cont…Beta Ratio

- HI-skew inverter→ stronger pMOS transistor
  → higher switching threshold
- LO-skew inverter→ weaker pMOS transistor
  → lower switching threshold
- Gates are usually skewed by adjusting the widths of transistors while maintaining minimum length for speed.

DC transfer characteristics of other static CMOS gates

- Understood by collapsing the gates into an equivalent inverter.
- Series transistors can be viewed as a single transistor of greater <u>length</u>.
- If only one of several parallel transistors is ON, the other transistors can be ignored.
- If several parallel transistors are ON, the collection can be viewed as a single transistor of greater <u>width</u>.

Noise Margins

- Allowable noise voltage on the input of a gate → the output will not be corrupted.
- Noise margin (or *noise immunity)* uses two parameters*:*
- LOW noise margin/noise margin for Low Input, NM_L

$$NM_L = V_{IL} - V_{OL}$$

- HIGH noise margin/noise margin for High Input, NM_H

$$NM_H = V_{OH} - V_{IH}$$

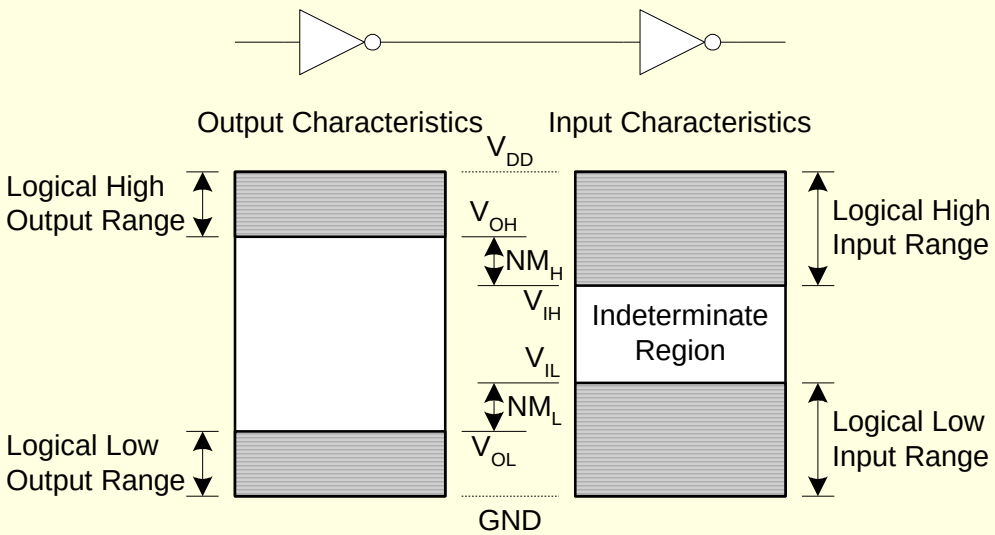

Logic Levels

- To maximize noise margins, select logic levels at
  - unity gain point of DC transfer characteristic

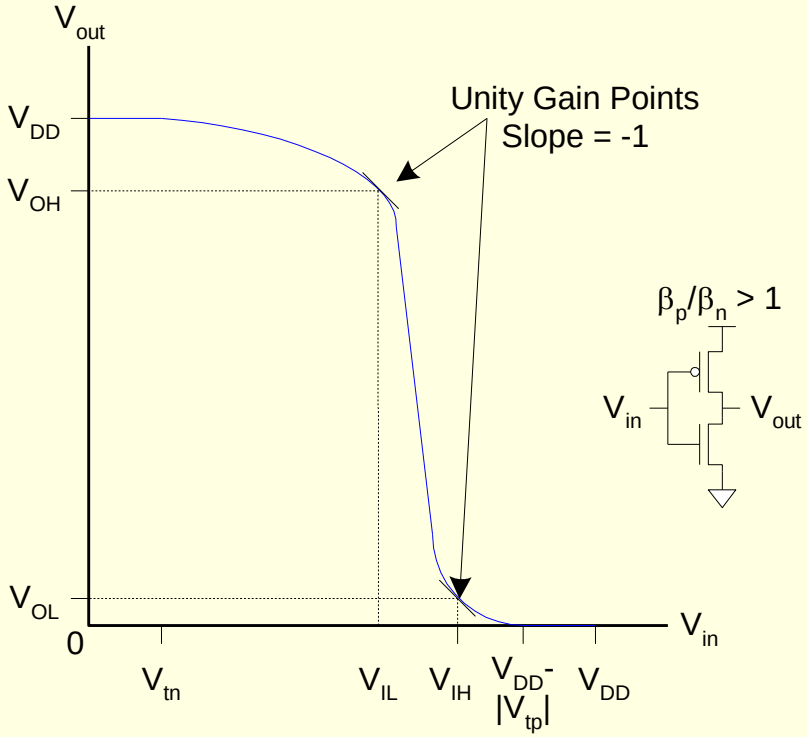

Effect of Beta Ratio

- **<u>Effect on switching threshold:</u>** if $\beta_n \approx \beta_p$ and $V_{tn} = |V_{tp}|$, $V_M = V_{DD}/2$, switching threshold is exactly in the middle

- **<u>Effect on noise margin:</u>** if $\beta_n \approx \beta_p$, V_{IH} and V_{IL} both close to V_M then noise margin is good

Simplifications for hand calculations:

Logic levels and noise margins

It is hard to compute points in transfer function with slope = -1.

Approximate in the following way:

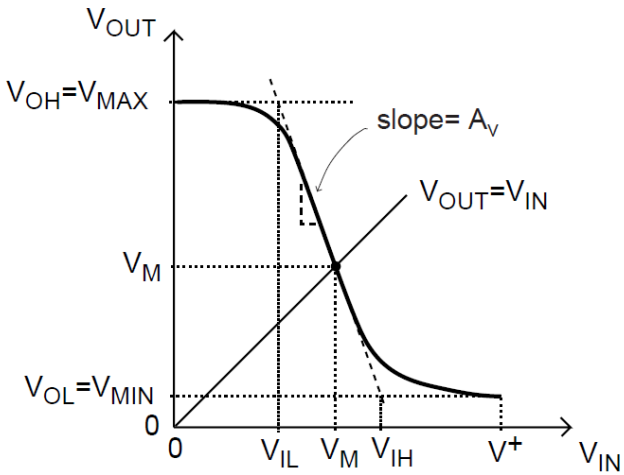

- $V_M \equiv$ input voltage for which $V_{OUT} = V_{IN}$
- Assume $V_{OL} \approx V_{MIN}$ and $V_{OH} \approx V_{MAX}$
- Trace tangent of transfer function at V_M
  - Slope = small signal voltage gain (A_v) at V_M
- $V_{IL} \approx$ intersection of tangent with $V_{OUT} = V_{MAX}$
- $V_{IH} \approx$ intersection of tangent with $V_{OUT} = V_{MIN}$

Drawing a Tangent Line

To draw a tangent line:

1. Choose a point on the curve.
2. Put a straight edge at that point on the curve.
3. Adjust the angle of the straight edge so that near the point it is equidistant from the curve on either side of the point.

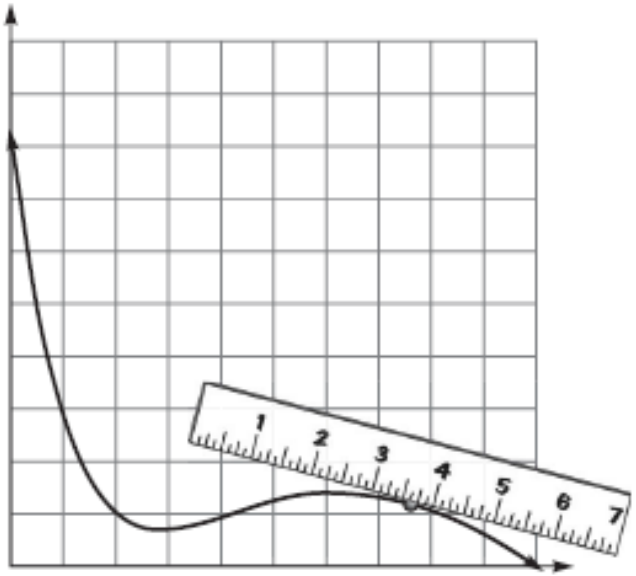

Example

- An inverter has the DC transfer characteristics shown in the Figure 1:

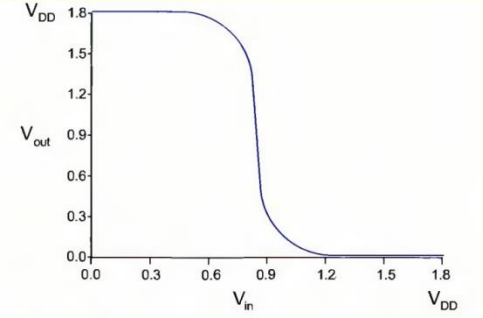

Figure 1

- What are the values of V_{IL}, V_{IH}, V_{OL}, and V_{OH}?
- What are high and low noise margins?
- What is effect on Noise Margin if $|V_{tp}| = V_{tn}$ and $\beta_p = \beta_n$?

Solution

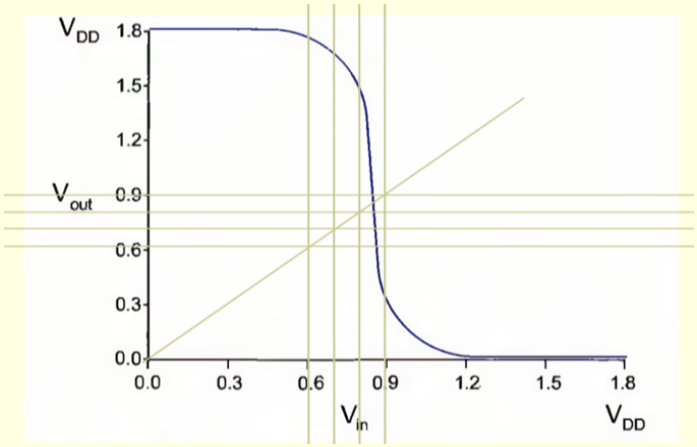

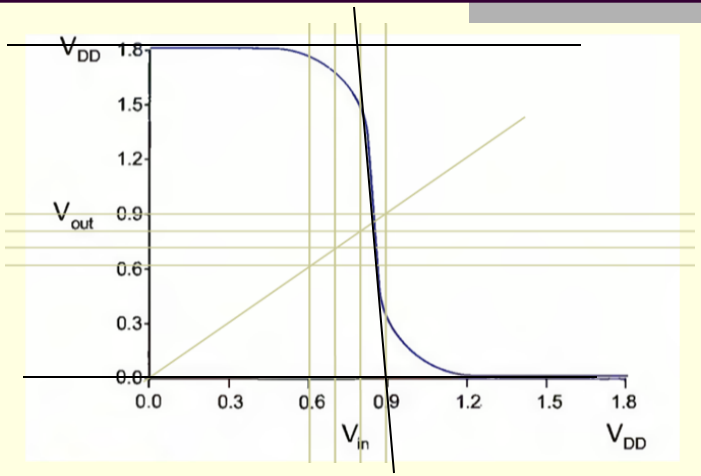

- So, $V_M = 0.85$ V

- $V_{IL} = 0.79$ V
- $V_{IH} = 0.88$ V
- $V_{OL} = 0$ V
- $V_{OH} = 1.8$ V
- $NM_L = V_{IL} - V_{OL} = 0.79 - 0 = 0.79$ V
- $NM_H = V_{OH} - V_{IH} = 1.8 - 0.88 = 0.92$ V

NMOS Pass Transistors

- We have assumed source is initially at V_S=0
- What if $V_{gs} < V_t$
  - current will not flow & transistor is not passing V_{DD}
- What if $V_{gs} > V_t$
  - current flows & transistor is passing V_{DD}
- Let $V_g = V_{DD}$
  - Now if $V_s > V_{DD}-V_t$, $V_{gs} < V_t$
  - Hence transistor would turn itself off
- NMOS pass transistors pull-up no higher than $V_{DD}-V_{tn}$
  - Called a degraded "1"
  - Approach degraded value slowly (low I_{ds})
- PMOS pass transistors pull-down no lower than V_{tp}
  - Called a degraded "0"

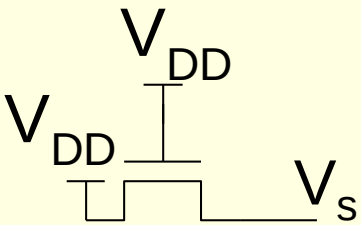

Pass Transistor Ckts

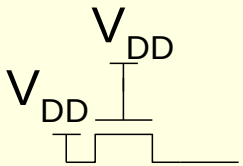

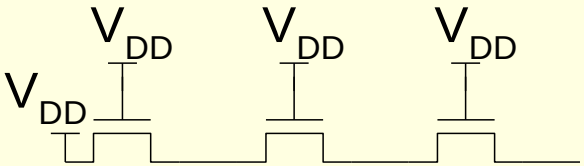

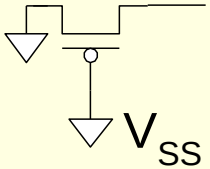

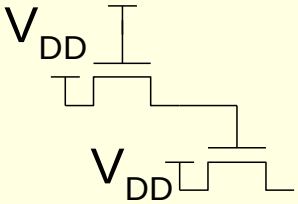
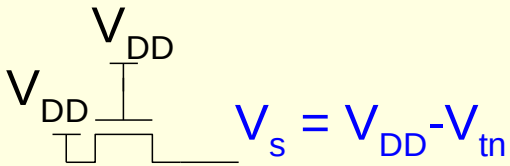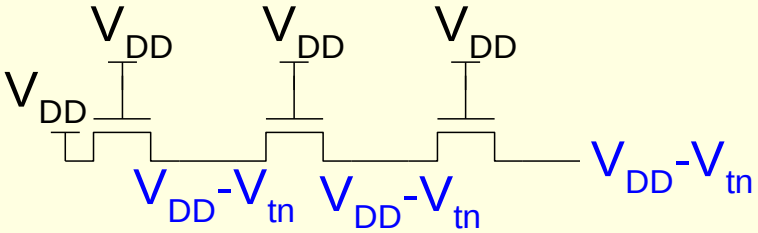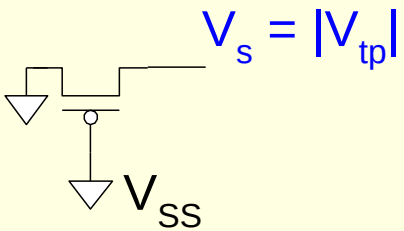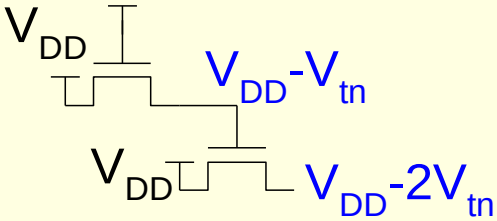
Pass Transistor Ckts