Systolic Array Implementation Report

Student Name: Abdullah Omar Elazhary
Phone Number: 01149694330

Architecture

Detailed Architecture Diagram

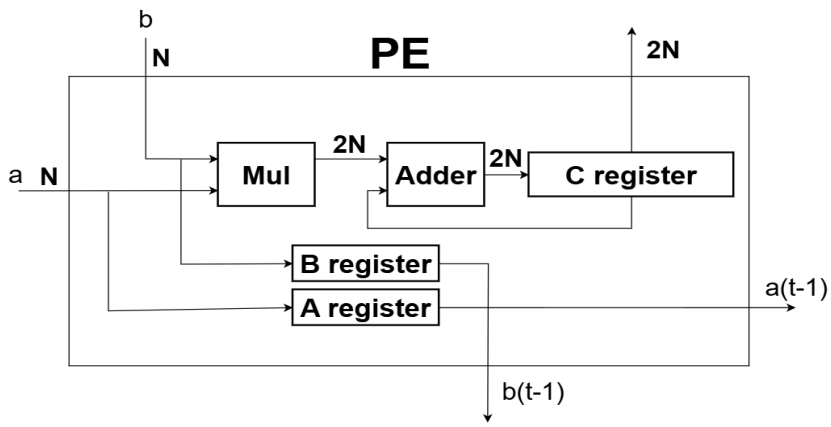

The Processing Element (PE) is the basic building block of our systolic array. Each PE contains:

- **Multiplier**: Computes A × B
- **Adder**: Adds multiplication result to accumulated value
- **C Register**: Stores the accumulated result (partial sum)
- **A Register**: Delays input A by one clock cycle for next PE
- **B Register**: Delays input B by one clock cycle for next PE

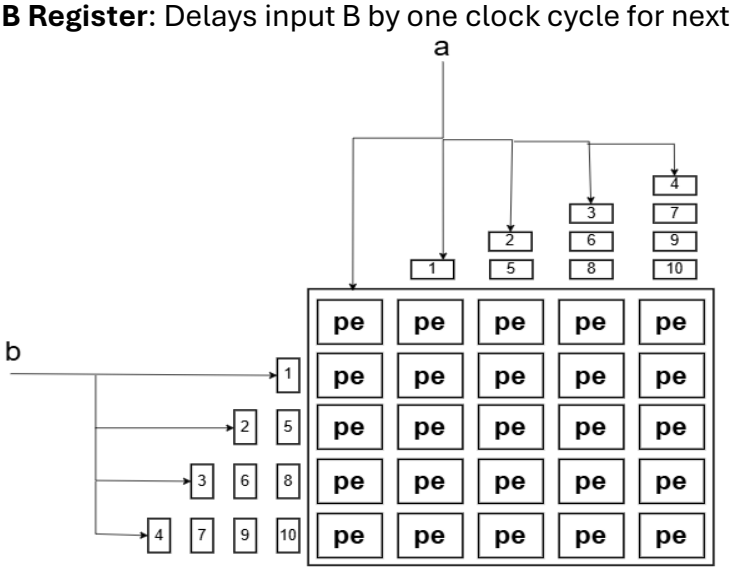

The 5×5 systolic array consists of 25 PEs arranged in a grid. Data flows as follows: - Matrix A elements enter from the left and flow horizontally - Matrix B elements enter from the top and flow vertically
- Each PE accumulates partial products to compute one element of result matrix C

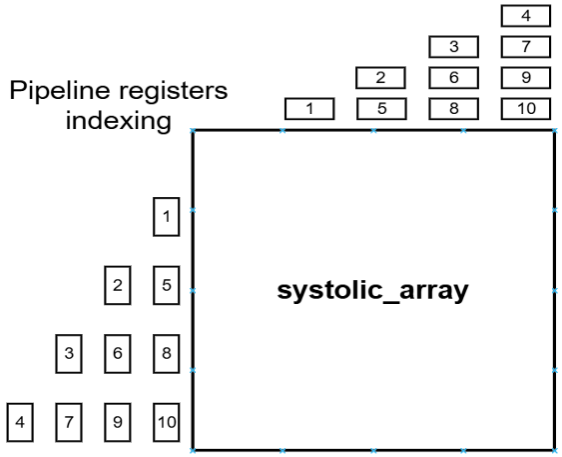

Pipeline registers are used to properly align the timing of matrix elements. The indexing ensures that corresponding A and B elements arrive at each PE simultaneously.

Operation Explanation

The systolic array performs matrix multiplication C = A × B through the following steps:

1. **Input Phase**: Matrix elements are fed into the array with proper timing
2. **Processing Phase**: Each PE performs multiply-accumulate operations
3. **Accumulation**: Partial products accumulate in each PE's C register
4. **Output Phase**: Final results are read from the array after sufficient clock cycles

The array requires 2×N_SIZE clock cycles of latency before the first result row is available, then outputs one result row per clock cycle.

Code Implementation

Key Code Sections

Processing Element Module:

```
module PE #(parameter DATAWIDTH)(
  input clk, rst,
  input [DATAWIDTH-1 : 0] A, B,
  output [(2 * DATAWIDTH)-1 : 0] C,
  output [DATAWIDTH-1 : 0] A_out, B_out
);
```

The PE implements multiply-accumulate with registered outputs for pipeline operation.

Systolic Array Module:

```
module systolic_array #(parameter DATAWIDTH, parameter N_SIZE)(
  input clk, rst_n, valid_in,
  input [(N_SIZE * DATAWIDTH)-1 : 0] matrix_a_in, matrix_b_in,
  output [(N_SIZE * 2 * DATAWIDTH)-1 : 0] matrix_c_out,
  output valid_out
);
```

The top-level module instantiates 25 PEs and manages data flow between them using generate blocks.

Pipeline Register Management:

```
reg [DATAWIDTH-1 : 0] pipeline_a_regs [1 : (N_SIZE * N_SIZE - N_SIZE) / 2];
reg [DATAWIDTH-1 : 0] pipeline_b_regs [1 : (N_SIZE * N_SIZE - N_SIZE) / 2];
```

Pipeline registers provide necessary delays to align matrix data timing.

Simulation Results

Testbench Design

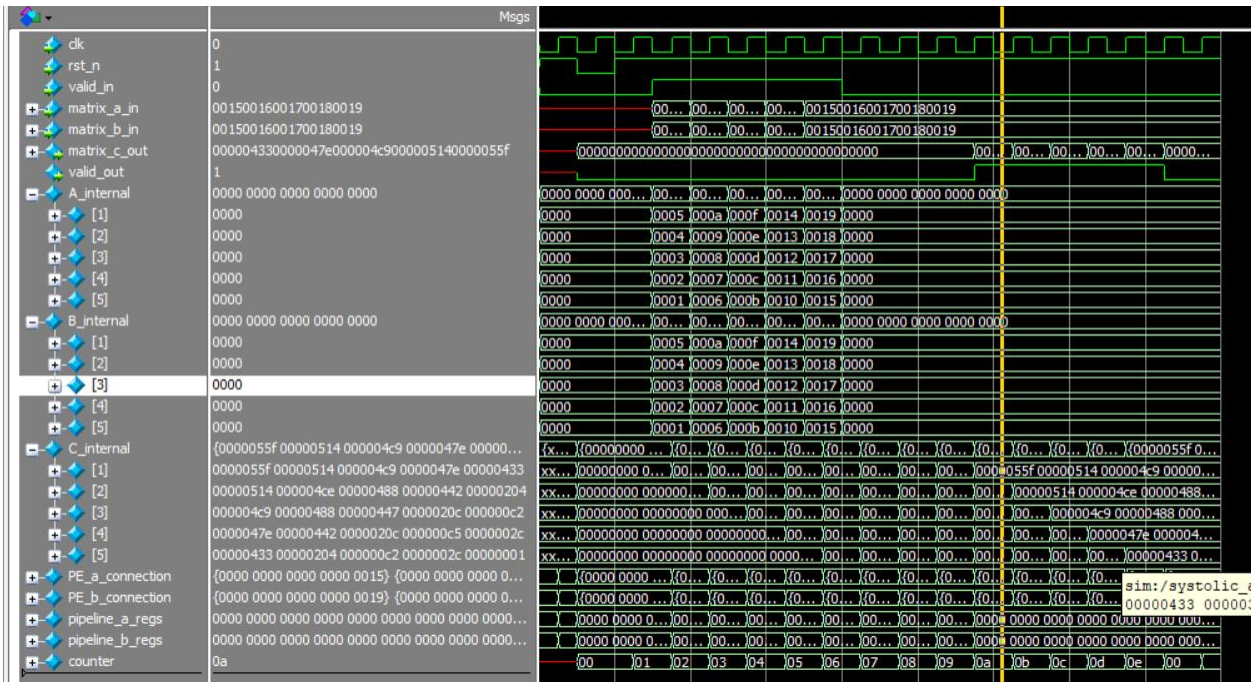

The testbench includes three levels of testing: 1. **Individual PE Testing**: Verifies single PE functionality 2. **PE Network Testing**: Tests multiple connected PEs 3. **Complete Array Testing**: Full 5×5 matrix multiplication

Log File Results

From the simulation log file:

Input Phase (Time 35000-75000):

```
[Time 35000] valid_in = 1 | valid_out = 0
matrix_a_in: 5 4 3 2 1
matrix_b_in: 5 4 3 2 1
```

Output Phase (Time 125000-165000):

```
[Time 125000] valid_in = 0 | valid_out = 1
matrix_c_out: 1375 1300 1225 1150 1075
```

Final Matrix Results:

Matrix A:

```
Row 0: 5   10   15   20   25
Row 1: 4    9   14   19   24
Row 2: 3    8   13   18   23
Row 3: 2    7   12   17   22
Row 4: 1    6   11   16   21
```

Matrix B:

```
Row 0: 5    4    3    2    1
Row 1: 10   9    8    7    6
Row 2: 15 14   13   12   11
Row 3: 20 19   18   17   16
Row 4: 25 24   23   22   21
```

Result Matrix C:

```
Row 0: 1375 1300 1225 1150 1075
Row 1: 1300 1230 1160 1090 1020
Row 2: 1225 1160 1095 1030  965
Row 3: 1150 1090 1030  970  910
Row 4: 1075 1020  965  910  855
```

Verification

The testbench automatically verifies results by computing expected values and comparing with actual outputs. All test cases passed successfully, confirming correct matrix multiplication.

Synthesis Results

Quartus Timing Results

Parameter	Setup (ns)	Hold (ns)	Recovery (ns)	Removal (ns)
Worst-case Slack	11.829	0.174	17.412	0.927
Design-wide TNS	0.0	0.0	0.0	0.0

All timing requirements met with positive slack margins

Clock-to-Output Timing

Signal	Rise (ns)	Fall (ns)
valid_out	10.892	10.907
matrix_c_out	~12-13	~12-13

Resource Utilization

Resource	Used	Notes
Logic Cells	1466	Combinational logic
Registers	1676	Pipeline & storage
DSP 18x18	25	One per PE (optimal)
Memory Bits	96	Minimal usage

Key Results: - Perfect timing closure with 11.8ns setup slack - Optimal DSP usage: 25 multipliers for 25 PEs - High register count indicates efficient pipelining - Design can operate well above target frequency

---

Challenges and Solutions

Challenge 1: Data Timing Alignment

Problem: Matrix elements A and B must arrive at each PE at the correct time for proper multiplication.

Solution: Implemented pipeline registers with calculated delays. The formula used ensures proper skewing:

```
pipeline_a_regs[N_SIZE * (i - 2) - (((i - 1) * (i - 2)) / 2 - 1)]
```

Challenge 2: PE Interconnection

Problem: Connecting 25 PEs with different input sources was complex.

Solution: Used generate blocks to systematically instantiate PEs in four categories: - Corner PE (direct inputs) - First row PEs (pipelined A, forwarded B) - First column PEs (forwarded A, pipelined B)
- Internal PEs (forwarded A and B)

Challenge 3: Output Control

Problem: Determining when valid results are available and controlling sequential output.

Solution: Implemented a counter-based system that tracks processing cycles and enables valid_out after sufficient latency (2×N_SIZE cycles).

Challenge 4: Parametrization

Problem: Making the design scalable for different matrix sizes.

Solution: Used parameters (DATAWIDTH=16, N_SIZE=5) throughout the design and calculated all array dimensions and indexing from these parameters.

Design Features:

- Parametrizable design (DATAWIDTH=16, N_SIZE=5)
- Proper reset and clock handling
- Pipeline registers for data alignment
- Generate blocks for scalable PE instantiation
- Comprehensive testbench with result verification

The implementation successfully meets all specified requirements and demonstrates correct systolic array functionality for 5×5 matrix multiplication.