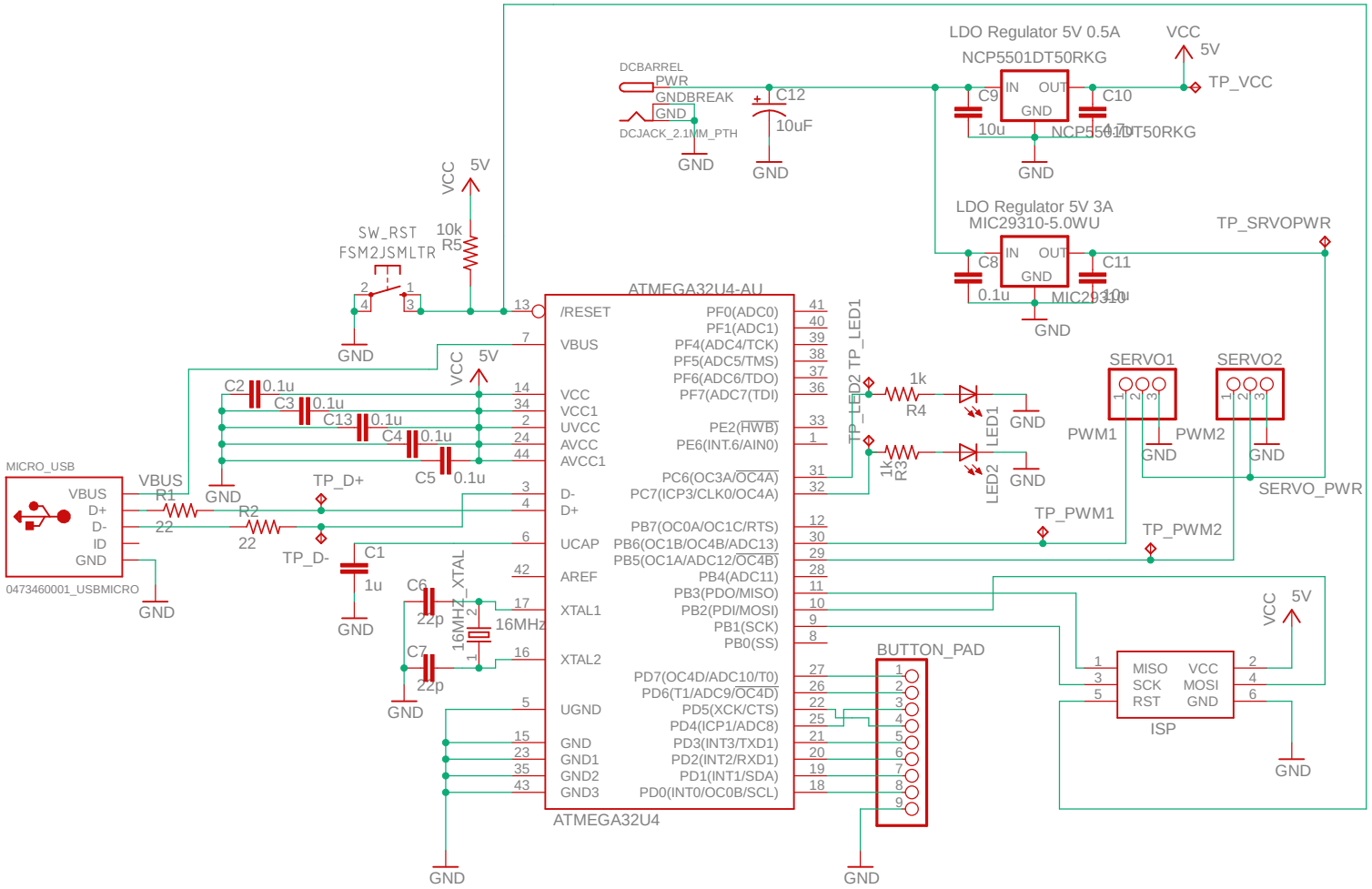

ECE411 Team 14
Servo-Powered Pan & Tilt Camera Mount

TITLE: ECE411_Project1

Document Number:

REV:

Date: 11/13/2018 4:59 PM

Sheet: 1/1