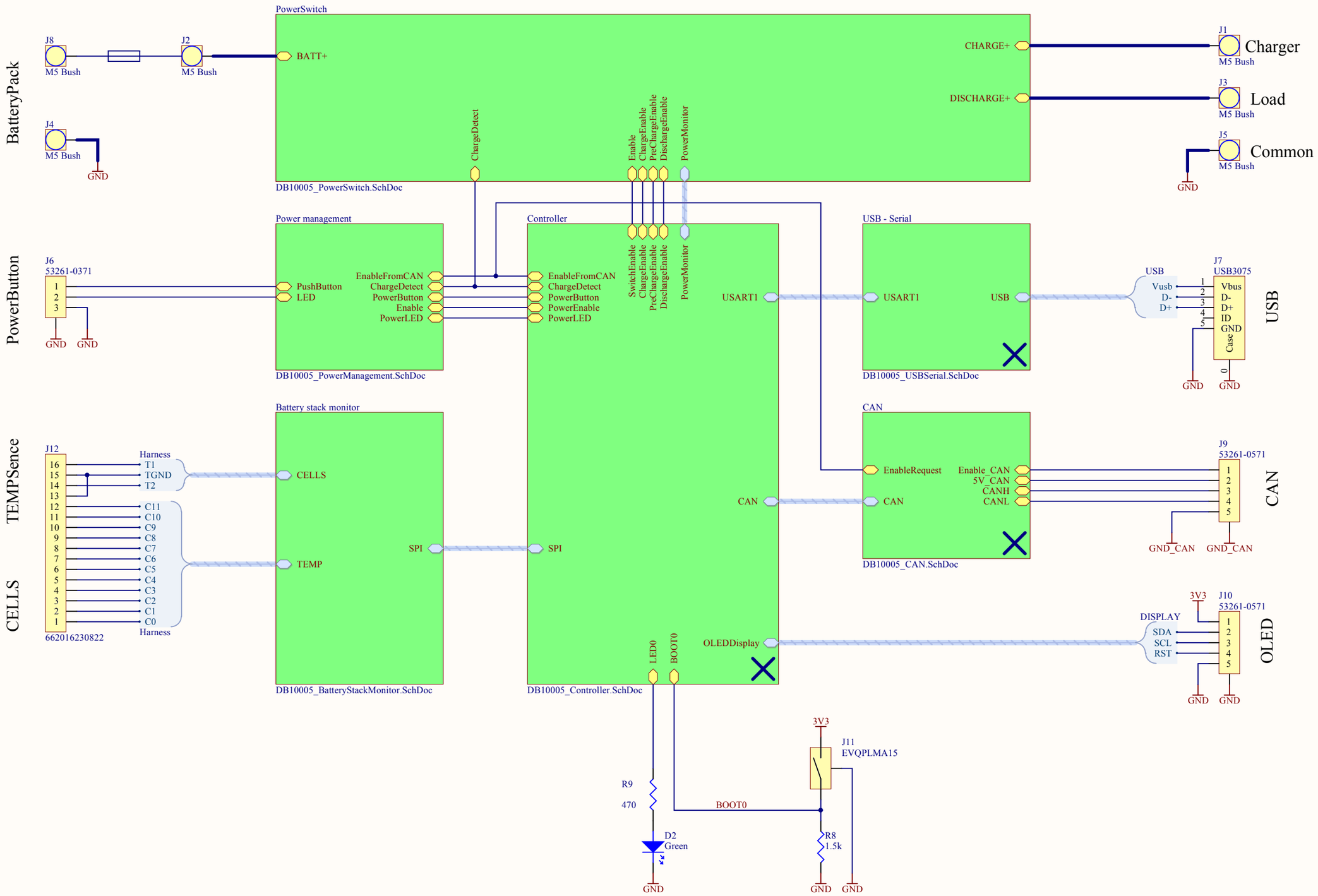

Title	*TopLevel schematic*		
Size: A3	Number:*	Revision:*	
Date: 1-5-2016	Time: 4:10:26	Sheet1 of 7	
File: C:\SynologyCloud\Projecten \DieBieMS\GitHub\Hardware\DB10005_TopLevel.SchDoc			

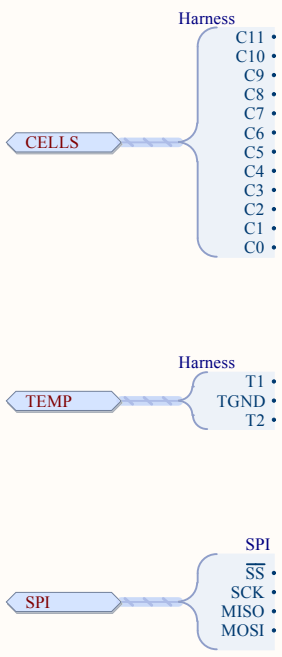

Title	*Battery stack monitor*		
Size: A3	Number:*	Revision:*	
Date: 1-5-2016	Time: 4:10:26	Sheet2 of 7	
File: C:\SynologyCloud\Projecten \DieBieMS\GitHub\Hardware\DB10005 BatteryStackMonitor.SchDoc			

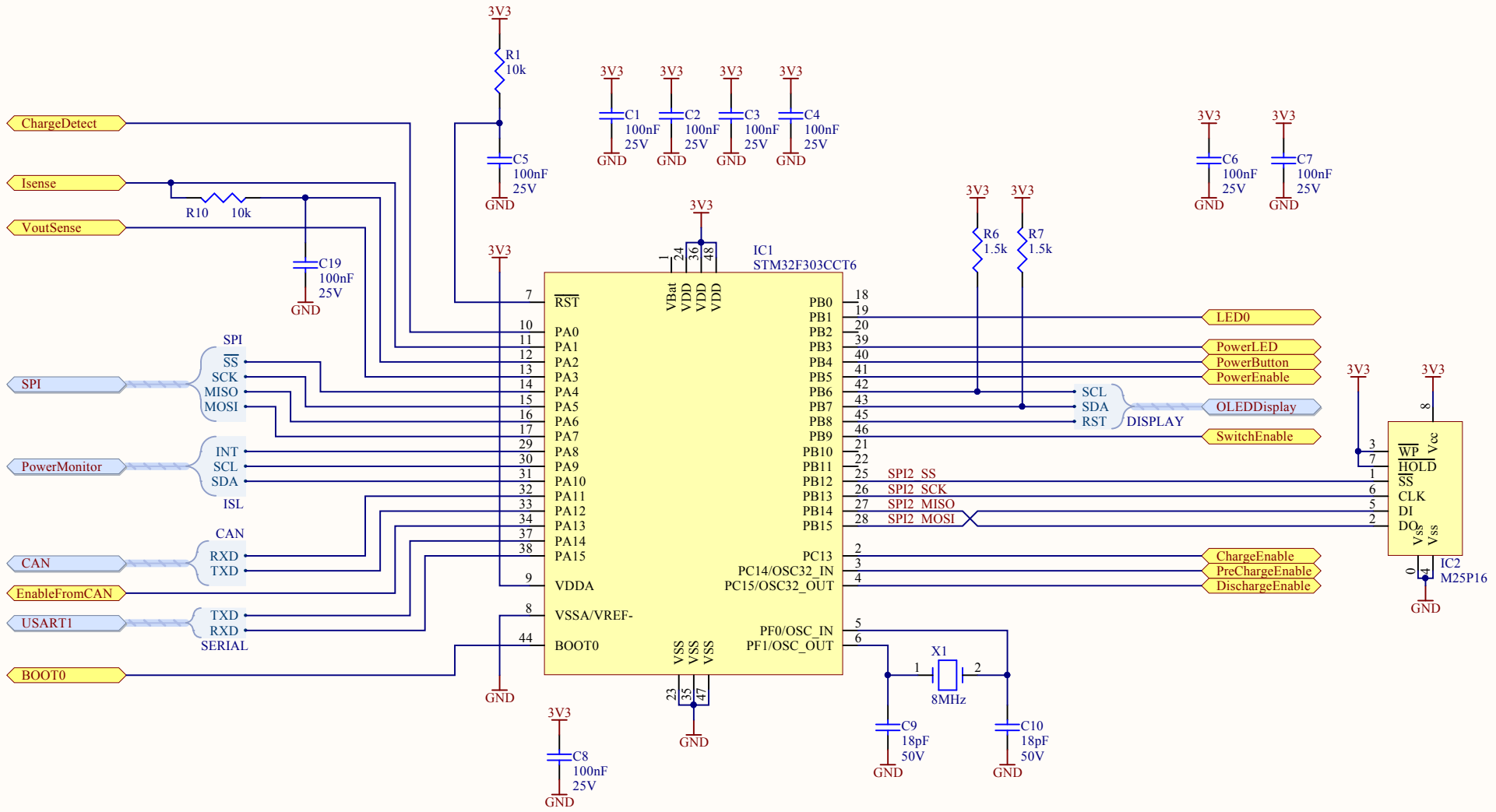

Title	*Controller*		
Size: A4	Number:*	Revision:*	
Date: 1-5-2016	Time: 4:10:26	Sheet 3 of 7	
File: C:\SynologyCloud\Projecten \DieBieMS\GitHub\Hardware\DB10005 Controller.SchDoc			

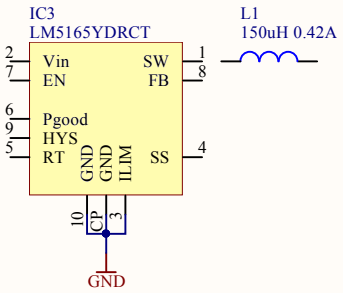

Title	***Power management***		
Size: A4	Number:*	Revision:*	
Date: 1-5-2016	Time: 4:10:26	Sheet4 of 7	
File: C:\SynologyCloud\Projecten \DieBieMS\GitHub\Hardware\DB10005 PowerManagement.SchDoc			

*
*
*
*
*

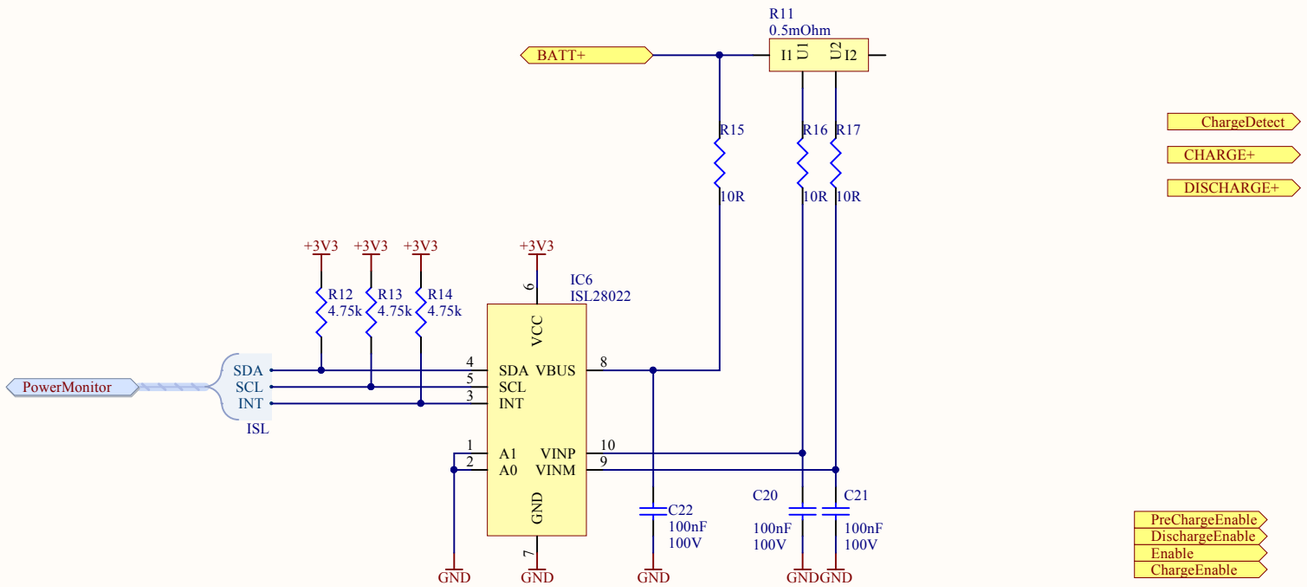

Title	*Power switching*		
Size: A3	Number:*	Revision:*	
Date: 1-5-2016	Time: 4:10:26	Sheet 5 of 7	
File: C:\SynologyCloud\Projecten \DieBieMS\GitHub\Hardware\DB10005_PowerSwitch.SchDoc			

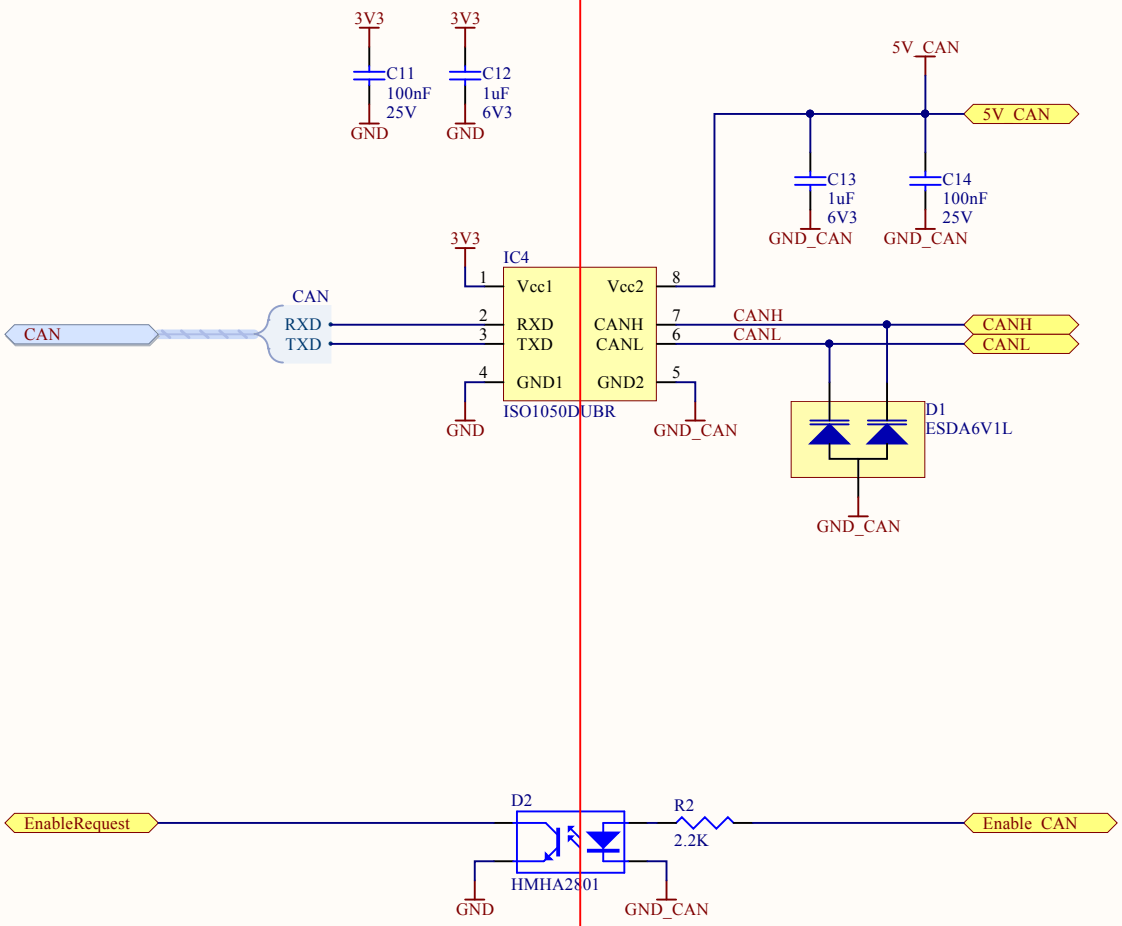

Title	*CAN interface*		
Size: A4	Number:*	Revision:*	
Date: 1-5-2016	Time: 4:10:27	Sheet6 of 7	
File: C:\SynologyCloud\Projecten \DieBieMS\GitHub\Hardware\DB10005 CAN.SchDoc			

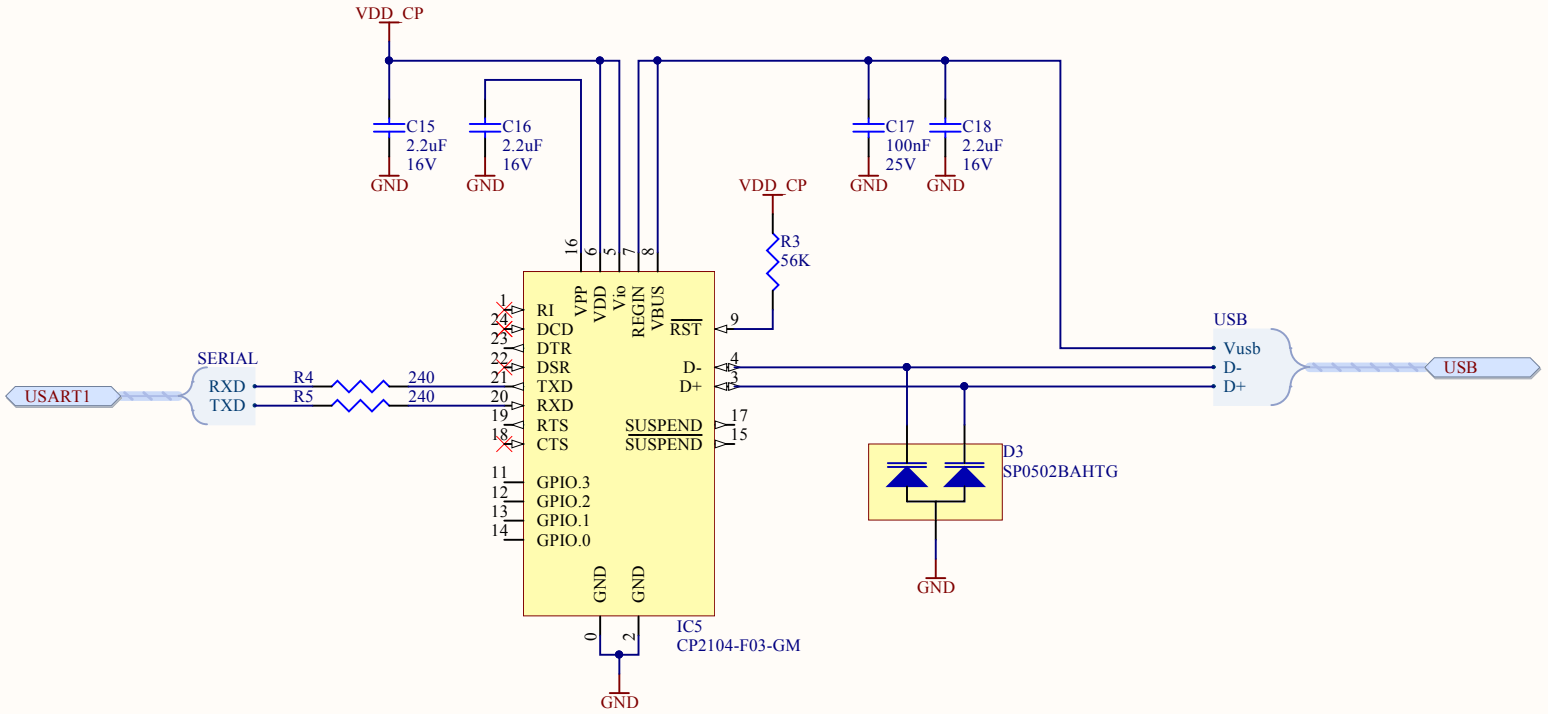

Title	*USB Serial interface*		
Size: A4	Number:*	Revision:*	
Date: 1-5-2016	Time: 4:10:27	Sheet 7 of 7	
File: C:\SynologyCloud\Projecten \DieBieMS\GitHub\Hardware\DB10005 USBSerial.SchDoc			