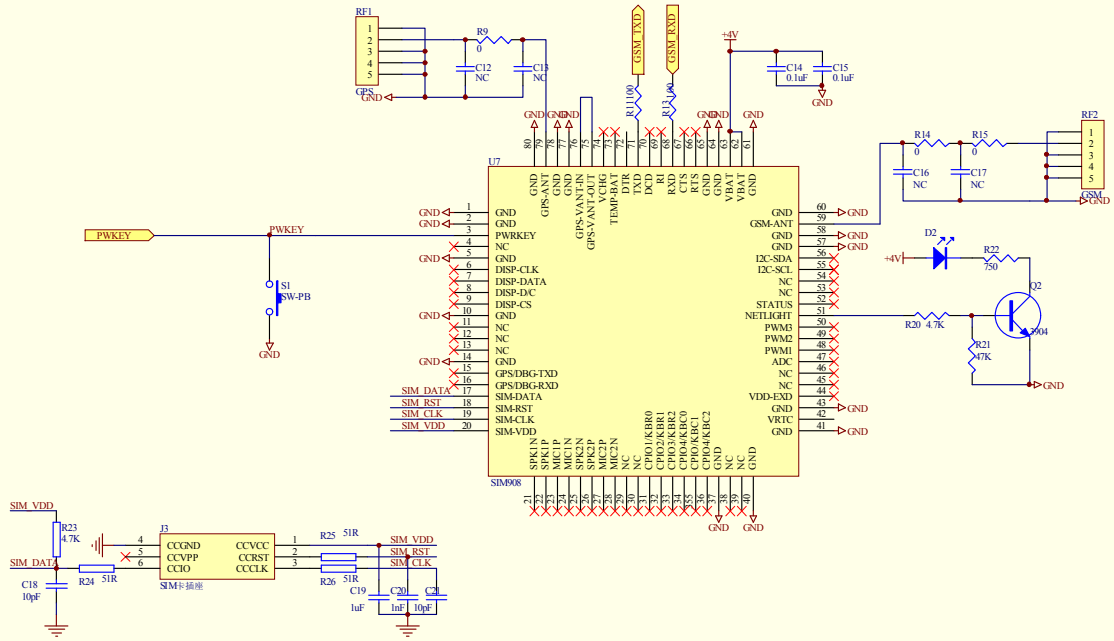

Title		
Size B	Number	Revision
Date: 17-Jul-2012	Sheet of	
File: C:\Users\haitao\Documents\Tencent Files\868[illegible]\Recv\SIM9[illegible]		