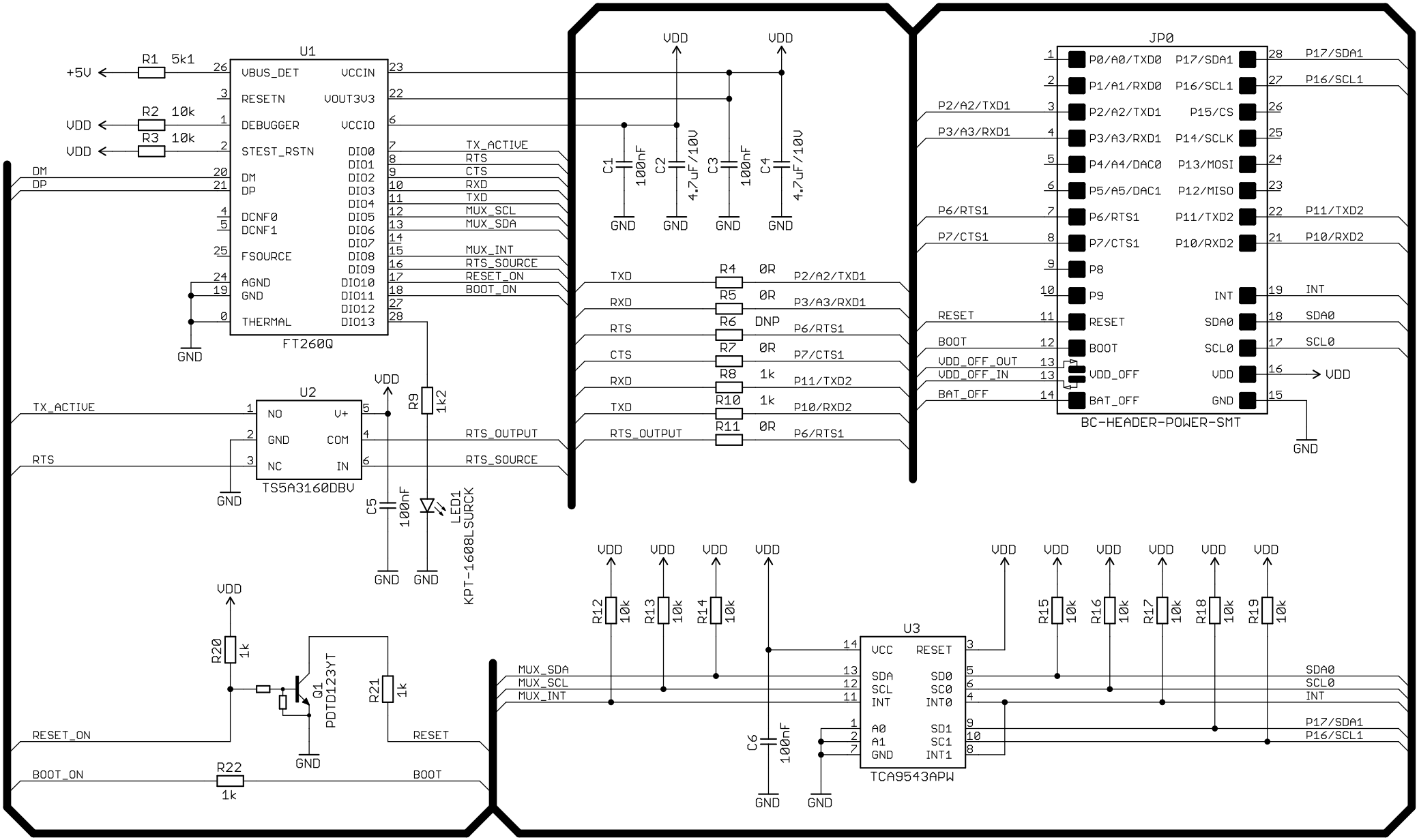

BRIDGE MODULE (c) by BigClown Labs s.r.o.

BRIDGE MODULE is licensed under the
CERN Open Hardware Licence version 1.2.

You should have received a copy of the licence along with this work. If not, see <http://www.ohwr.org/cernohl>.

FD1 FD2 FD3

BIGCLOWN OPEN-SOURCE ELECTRONICS WWW.BIGCLOWN.COM	BRIDGE MODULE
	REVISION: 1.1
	MODIFIED: 13.10.2016 15:35 — 1/2

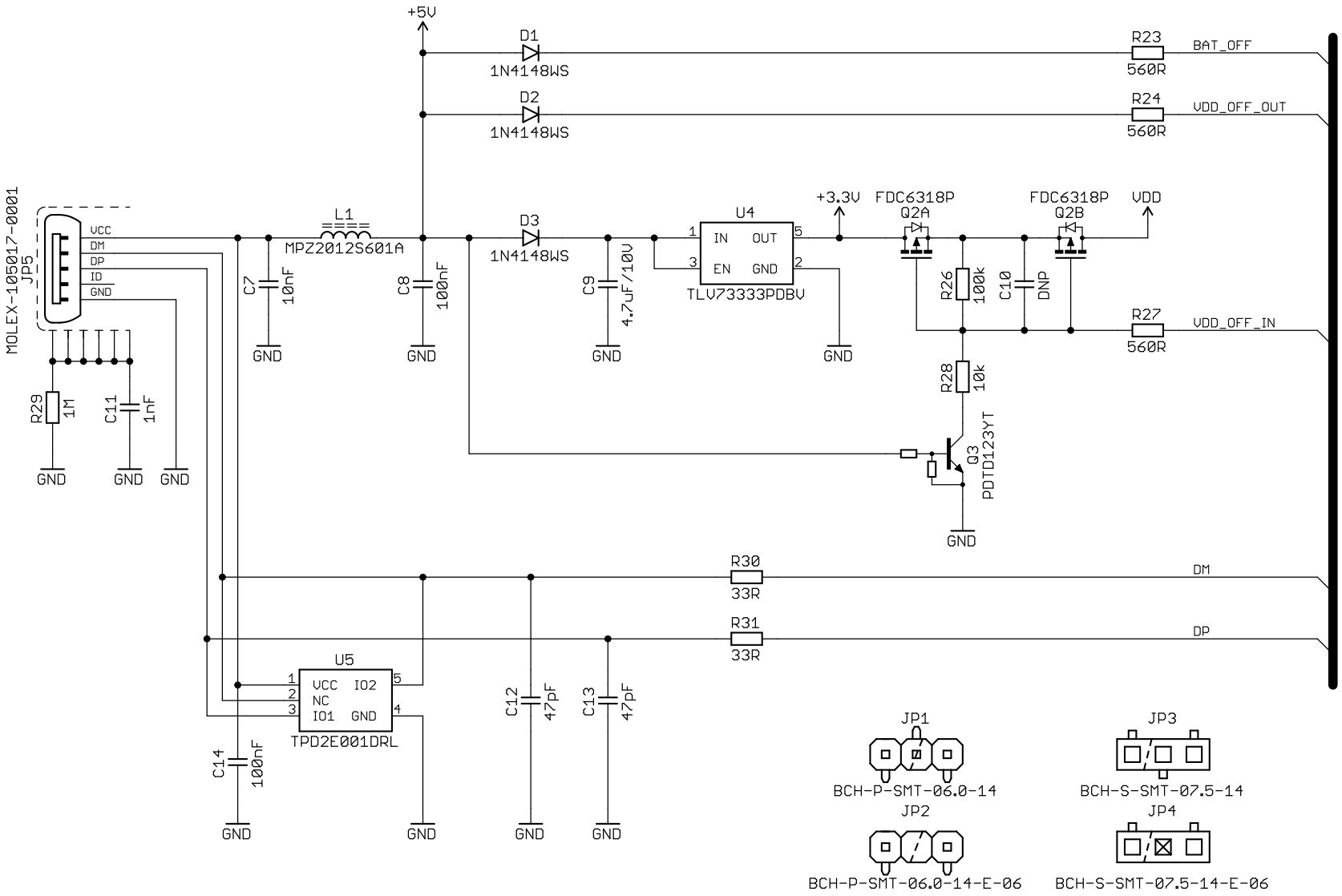

BRIDGE MODULE (c) by BigClown Labs s.r.o.

BRIDGE MODULE is licensed under the
CERN Open Hardware Licence version 1.2.

You should have received a copy of the licence along with this work. If not, see <http://www.ohwr.org/cernohl>.

BIGCLOWN OPEN-SOURCE ELECTRONICS WWW.BIGCLOWN.COM	BRIDGE MODULE	
	REVISION: 1.1	
	MODIFIED: 13.10.2016 15:35	2/2