CHARACTERISTIC CURVE OF A ZENER DIODE AND FINDING REVERSE BREAK DOWN VOLTAGE

What is a zener diode

It is a special purpose diode, designed to operate under reverse bias in breakdown region

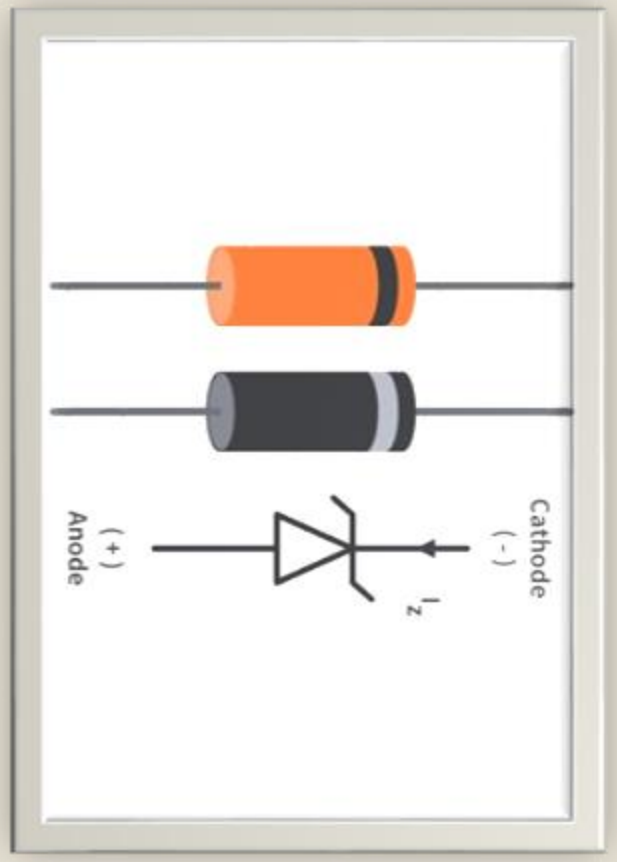

Type of zener breakdown

1. Zener break down –

it has high doping,thin depletion layer and electron pass the depletion layer by tunnel effect,it is used in dc voltage stabilizers.

Type of zener breakdown

2. avalanche break down – it has low doping,thick depletion layer and minoritie electron pass through depletion layer by breaking it as they acquire very high velocity.

Use of zener diode

Zener diode is used as voltage regulator or voltage stabilizer

Circuit Diagram

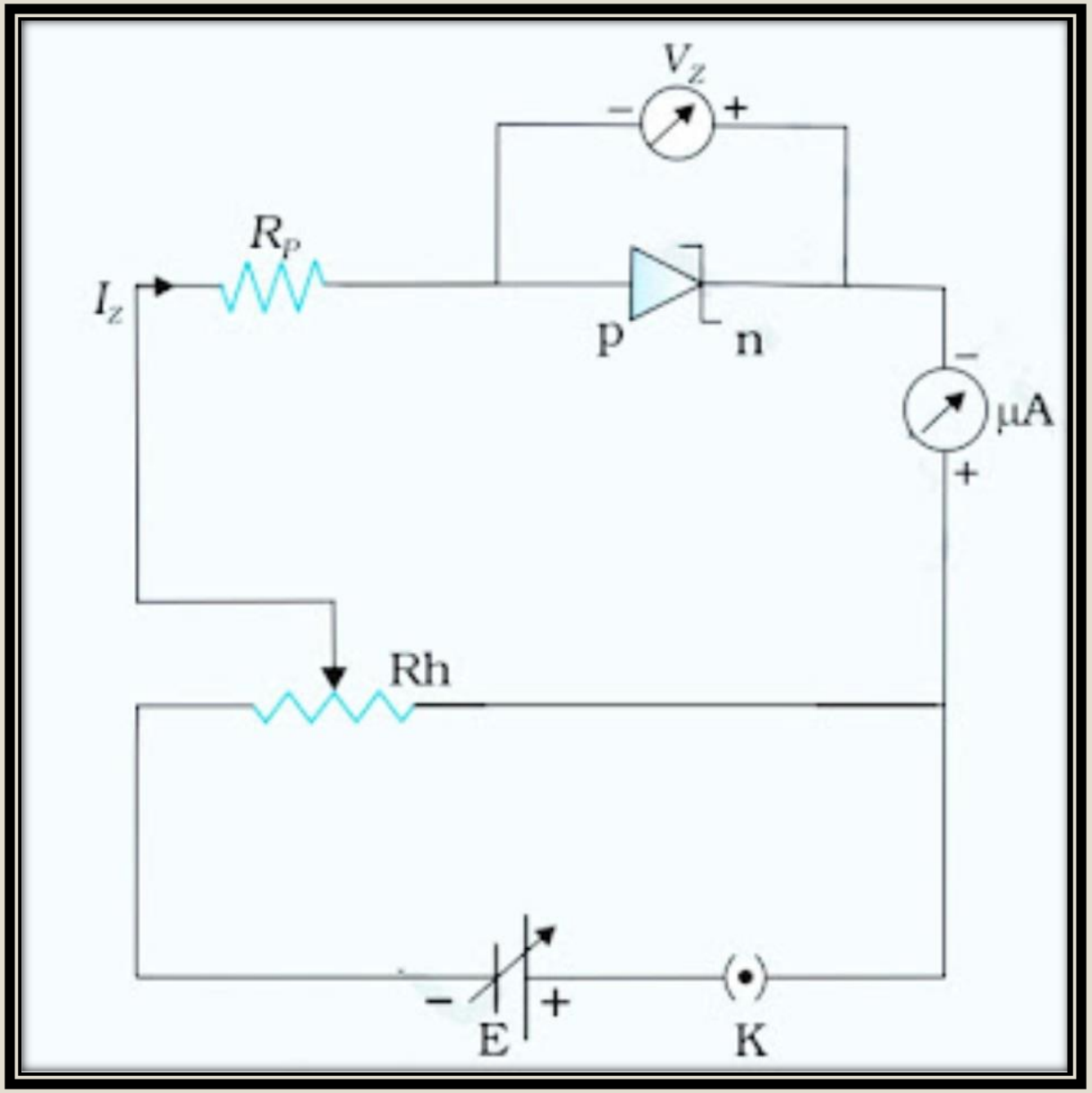

BREAKDOWN VOLTAGE

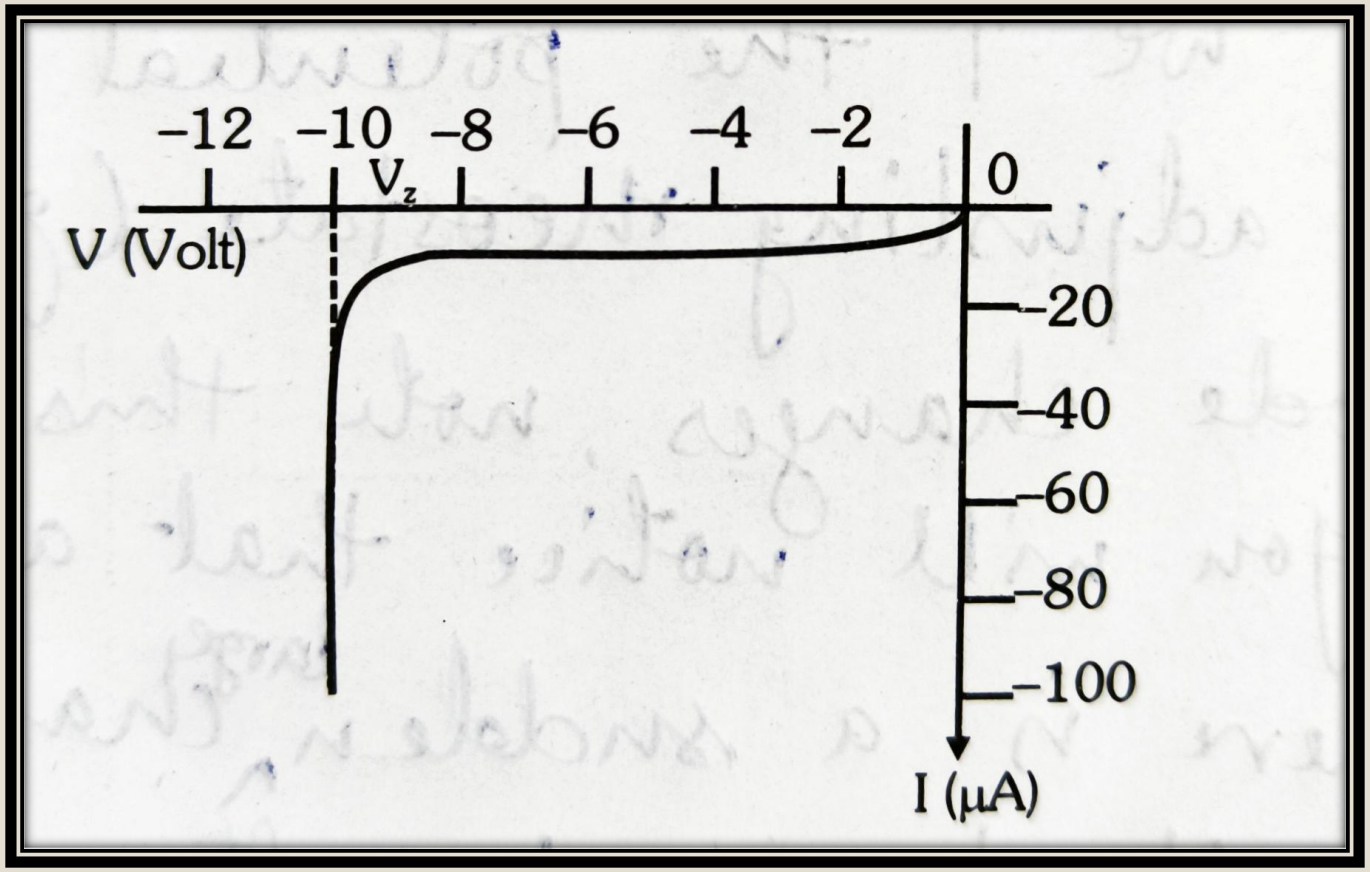

Question

A Zener diode is connected to a battery and a load as shown below. The currents I, I_Z and I_L are respectively.

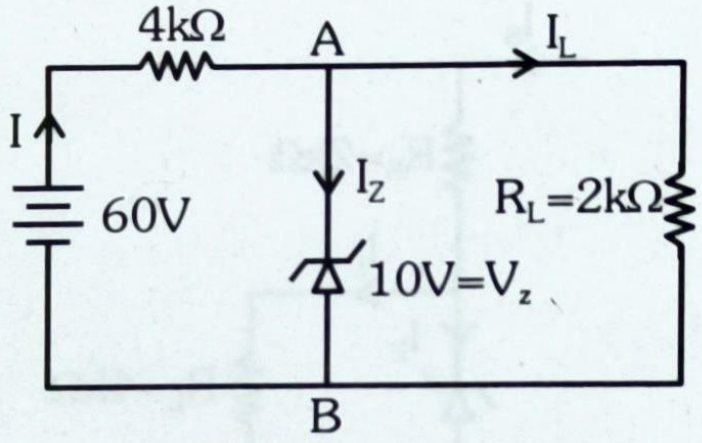

(1) 12.5 mA, 5 mA, 7.5 mA

(2) 15 mA, 7.5 mA, 7.5 mA

(3) 12.5 mA, 7.5 mA, 5 mA

(4) 15 mA, 5 mA, 10 mA

Solution

A Zener diode is connected to a battery and a load as shown below. The currents I, I_Z and I_L are respectively.

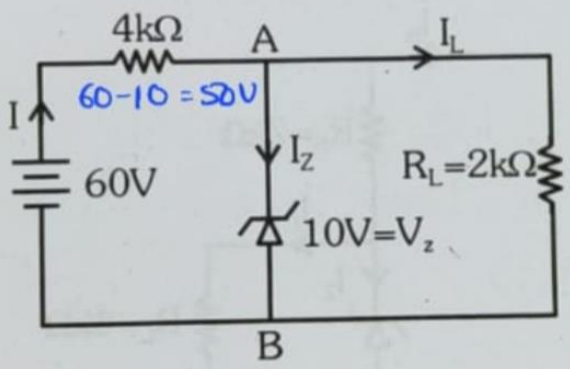

voltage across 2 kΩ = 10 volt

current i_L through 2 kΩ = $\frac{10 \text{ volt}}{2000\,\Omega}$

= 5 mA.

current $i = \frac{50}{4000} = 12.5$ mA

current $i_Z = i - i_L = 12.5 - 5 = 7.5$ mA

THANK YOU!