DNR TECHNO SERVICES

Your Service Partner.....

Address: 27-A, Parda Bagh, Darya Ganj, New Delhi – 110002, India
Phone: 9711196735, 9911399919
E-mail: dnr.techservices@gmail.com
Website: www.dnrtechnoservices.com

ABOUT US…

DNR TECHNO SERVICES
Your Service Partner.....

DNR Techno Services an **Engineer's** owned company built on complete customer satisfaction having its base in **New Delhi**. A unique mix of capabilities gives DNR a strong foundation for meeting your needs..., whether you're an OEM or a user of machine tools.

Our motto -

At **DNR Techno Services** is to help customers earn more profits by providing intelligent machining solutions through an efficient pre & post sales support.

PRODUCT RANGE…

DNR TECHNO SERVICES
Your Service Partner.....

- ✓ Pressure Die Casting Machine
- ✓ Gravity Die Casting Machine
- ✓ Sand Core Shooting Machines
- ✓ Automatic Molding Machine
- ✓ CNC Turning Machine
- ✓ CNC Turn Mill Centre
- ✓ VMC - Vertical Machining Centre
- ✓ HMC - Horizontal Machining Centre
- ✓ VTL - Vertical Turning Lathe
- ✓ Rotary Transfer Machine
- ✓ Fiber Laser Marking Machine
- ✓ Tool Grinding/Peeling Machine
- ✓ Auto Polishing Machine
- ✓ Water Leakage Testing Machine

DNR CUSTOMER COVERAGE

DNR TECHNO SERVICES
Your Service Partner.....

- ANDHRA PRADESH
- GUJARAT
- HARYANA
- JAMMU
- KOLKATA
- MADHYA PRADESH
- MAHARASHTRA
- NEW DELHI
- PUNJAB
- RAJESTHAN
- TELANGANA
- UTTAR PRADESH
- UTTRAKHAND

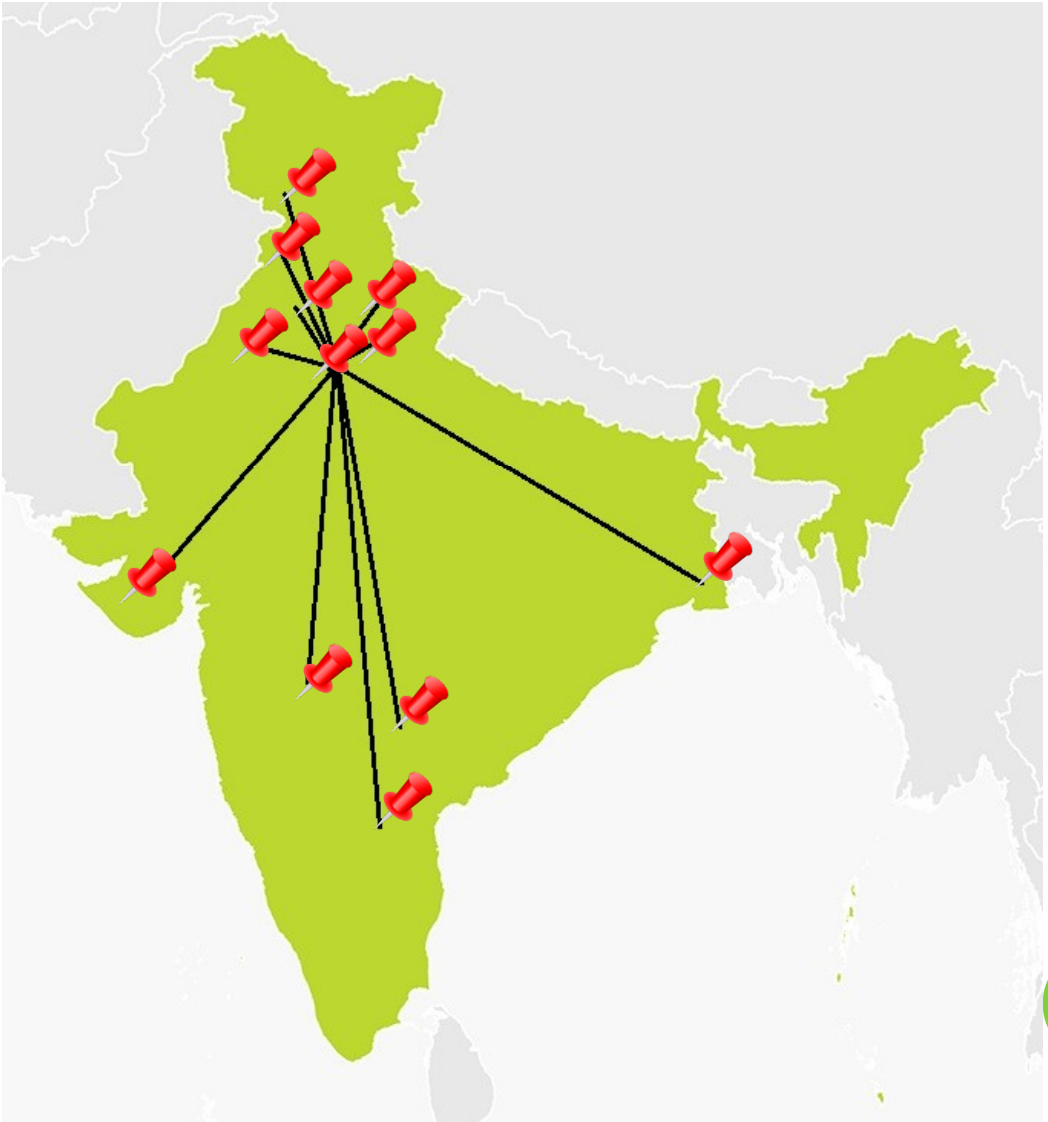

Pressure Die Casting Machine

Cold Chamber Die Casting Machine

- Range – 150 to 1200 Ton

Hot Chamber Die Casting Machine

- Range – 12 to 400 Ton

Squeeze **Casting Machine**

- Range – 150 to 2200 Ton

DNR TECHNO SERVICES
Your Service Partner.....

Cold Chamber Die Casting Machine

(Range – 150 to 1200 Ton)

DNR TECHNO SERVICES

Your Service Partner.....

Hot Chamber Die Casting Machine

(Range – 12 to 400 Ton)

DNR TECHNO SERVICES
Your Service Partner.....

VERTICAL SQUEEZE CASTING MACHINE

(RANGE – 150 TO 2200 TON)

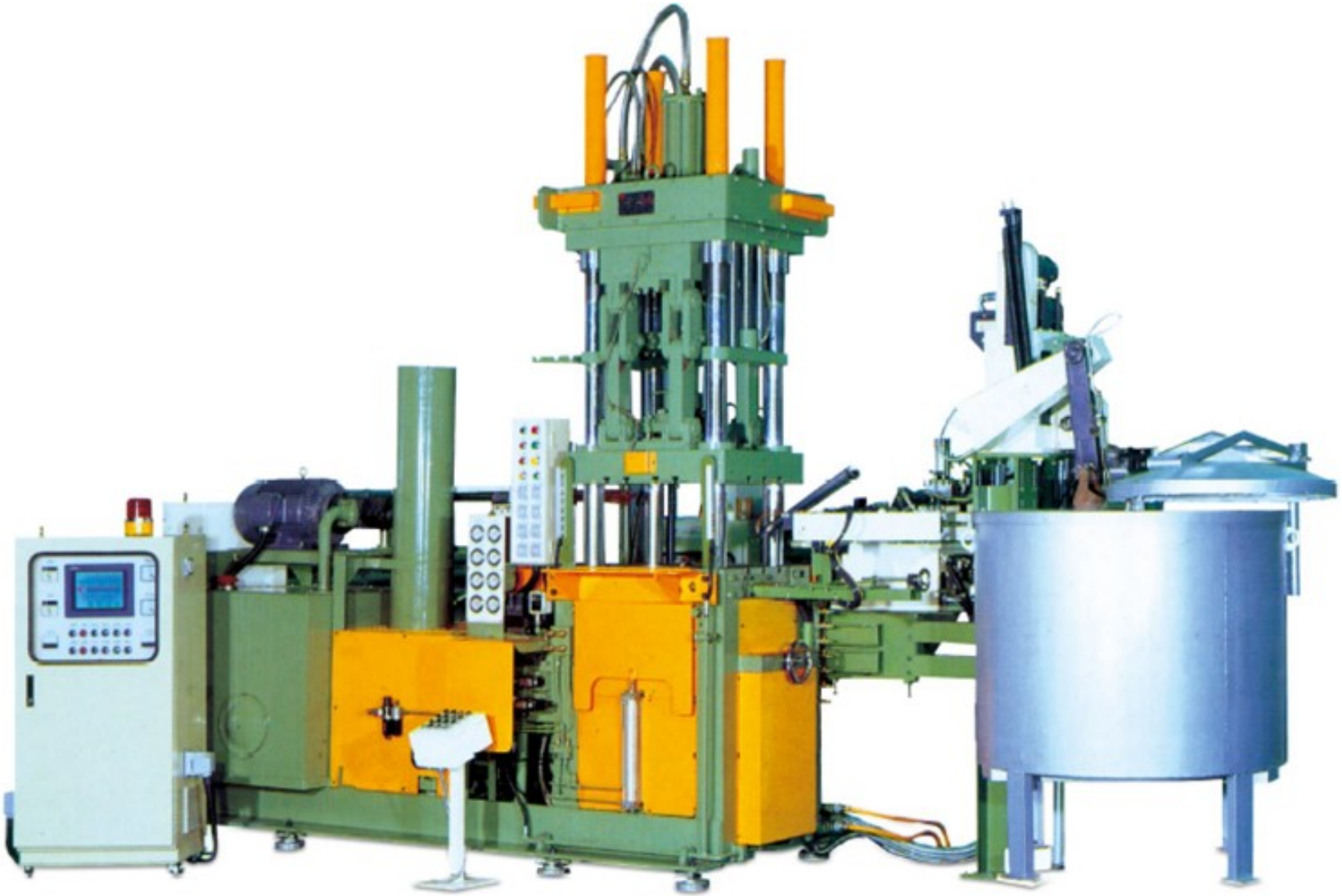

COMPLETE RANGE FOR FOUNDRY

DNR TECHNO SERVICES
Your Service Partner.....

DNR TECHNO SERVICES

Your Service Partner.....

ALUMINUM GRAVITY DIE CASTING MACHINE

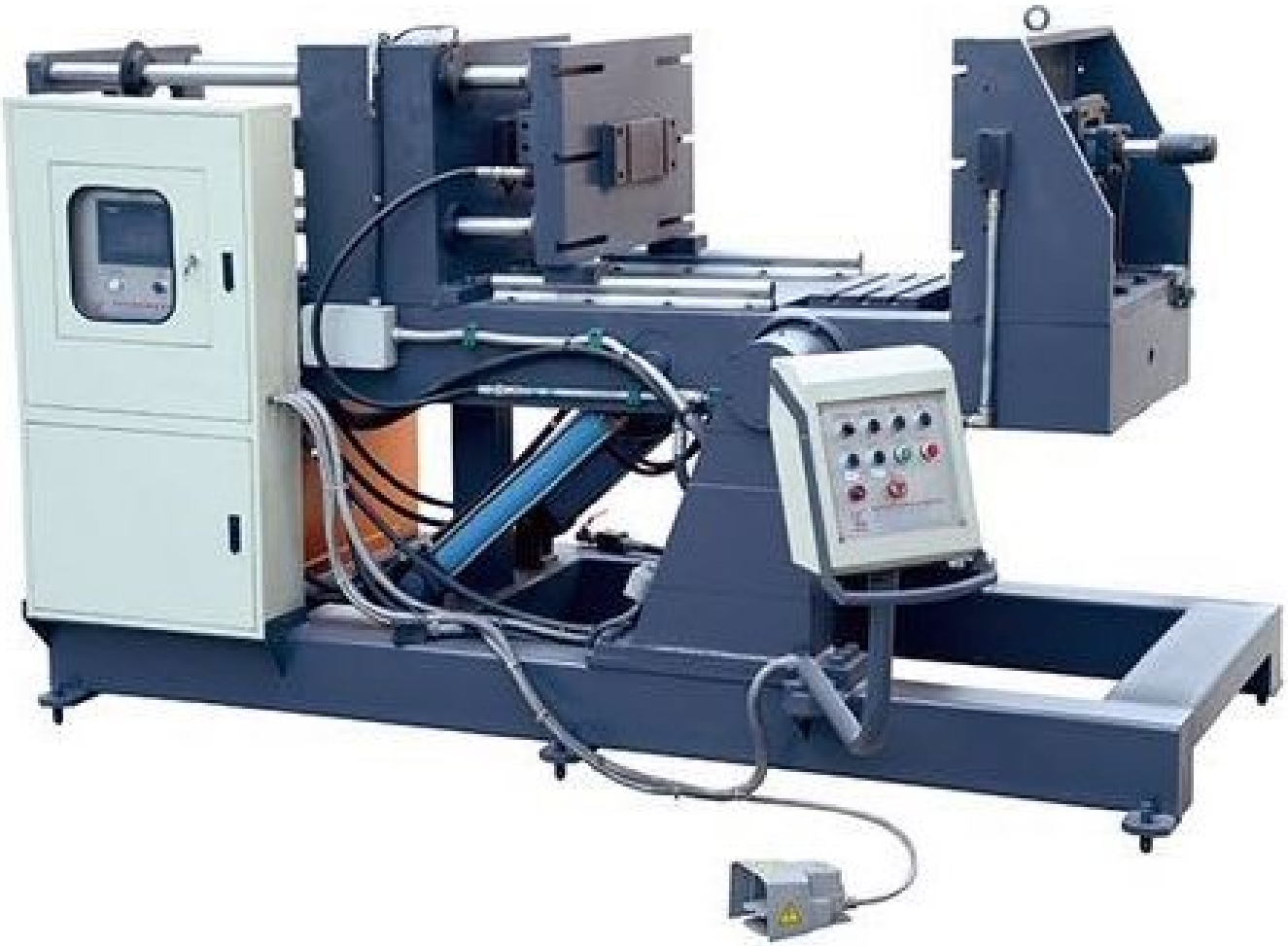

DNR TECHNO SERVICES

Your Service Partner.....

BRASS GRAVITY DIE CASTING MACHINE

DNR TECHNO SERVICES
Your Service Partner.....

SAND CORE SHOOTING MACHINE

Single Head Core Shooter

Double Head Core Shooter

DNR TECHNO SERVICES

Your Service Partner.....

Sand Making Machine

Automatic Moulding Machine

DNR TECHNO SERVICES

Your Service Partner.....

SAMPLES

CNC MACHINES

DNR TECHNO SERVICES
Your Service Partner.....

CNC WITH LIVE TOOLING OPTION

DNR TECHNO SERVICES
Your Service Partner.....

LIVE TOOLING

High Torque Secondary System

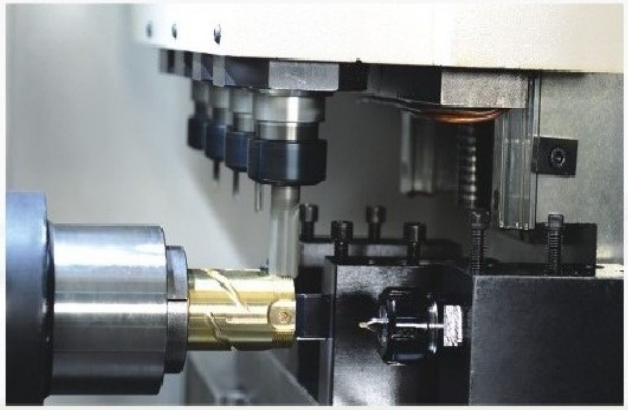

Z-MaT live tooling units feature a robust gear drive system that provides efficient power transmission and maximum continuous torque. An extra-large servo motor drive provides 50% more torque than comparable units on the market. Also, the use of quality ground transmission gears reduces noise levels at high speed.

Driven Toolholders List

Form	Position	Group tool nos	Max dia. of live tool	Max. speed
ER20	Radial, Axial, Vertical	1、2、3	ϕ13mm	5000rpm
ER25	Radial, Axial, Vertical	1、2、3	ϕ16mm	5000rpm
ER32	Radial, Axial, Vertical	1、2、3	ϕ20mm	5000rpm

Able to fit for most existing Z-MaT models.

C Axis Motion

C Axis drive units provide high precision bi-directional spindle motion that is fully interpolated with X and Z axis movements. The unit is servo driven with a timing pulley and belt, and a powerful hydraulic brake locks the main spindle during secondary operations.

Y Axis Motion

Z-MaT Y axis drive units are used for off center milling, drilling and tapping. Each Y axis model comes standard with C axis and live tooling capabilities and fully interpolates with C axis, X axis and Z axis movement. This combination provides a powerful, efficient solution for secondary machining of turned parts.

DNR TECHNO SERVICES
Your Service Partner.....

CNC WITH LIVE TOOLING OPTION

DNR TECHNO SERVICES

Your Service Partner.....

COMPLETE RANGE OF MACHINING CENTERS

DNR TECHNO SERVICES

Your Service Partner.....

VERTICAL MACHINING CENTRE (VMC)

DNR TECHNO SERVICES
Your Service Partner.....

VERTICAL TURNING LATHE (VTL)

DNR TECHNO SERVICES

Your Service Partner.....

HEAVY DUTY CNC TURNING MACHINE

DNR TECHNO SERVICES

Your Service Partner.....

ROTARY TRANSFER MACHINE

DNR TECHNO SERVICES

Your Service Partner.....

FIBER LASER MARKING MACHINE

GRINDING/PEELING MACHINE

DNR TECHNO SERVICES
Your Service Partner.....

4, 6, 8, 10, 12 Spindle Machine

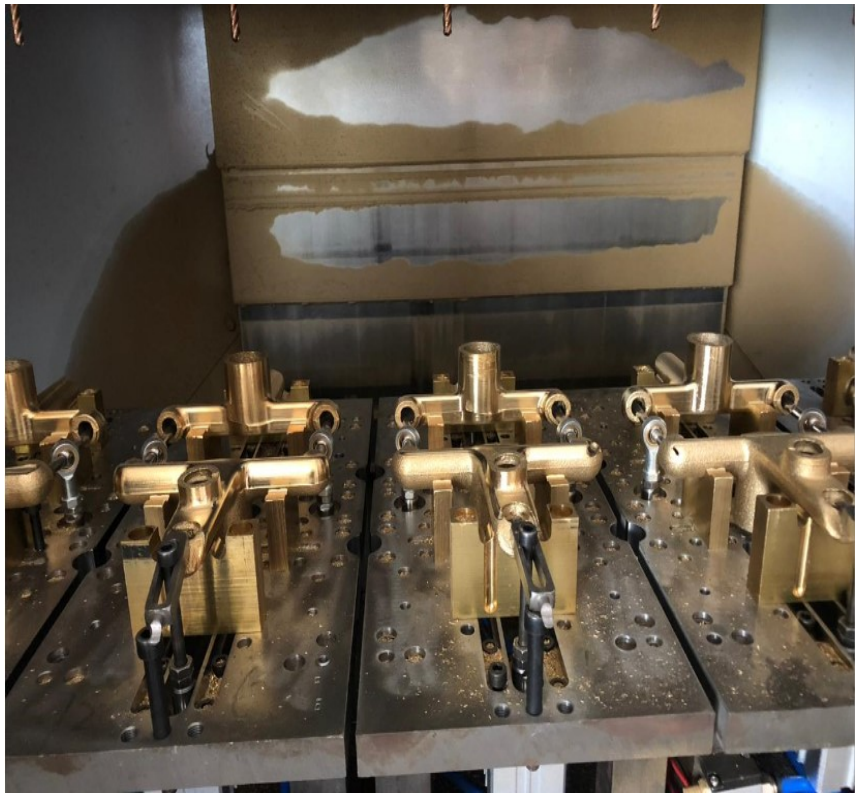

AUTO POLISHING MACHINE

DNR TECHNO SERVICES
Your Service Partner.....

2 Station Machine

4 Station Machine

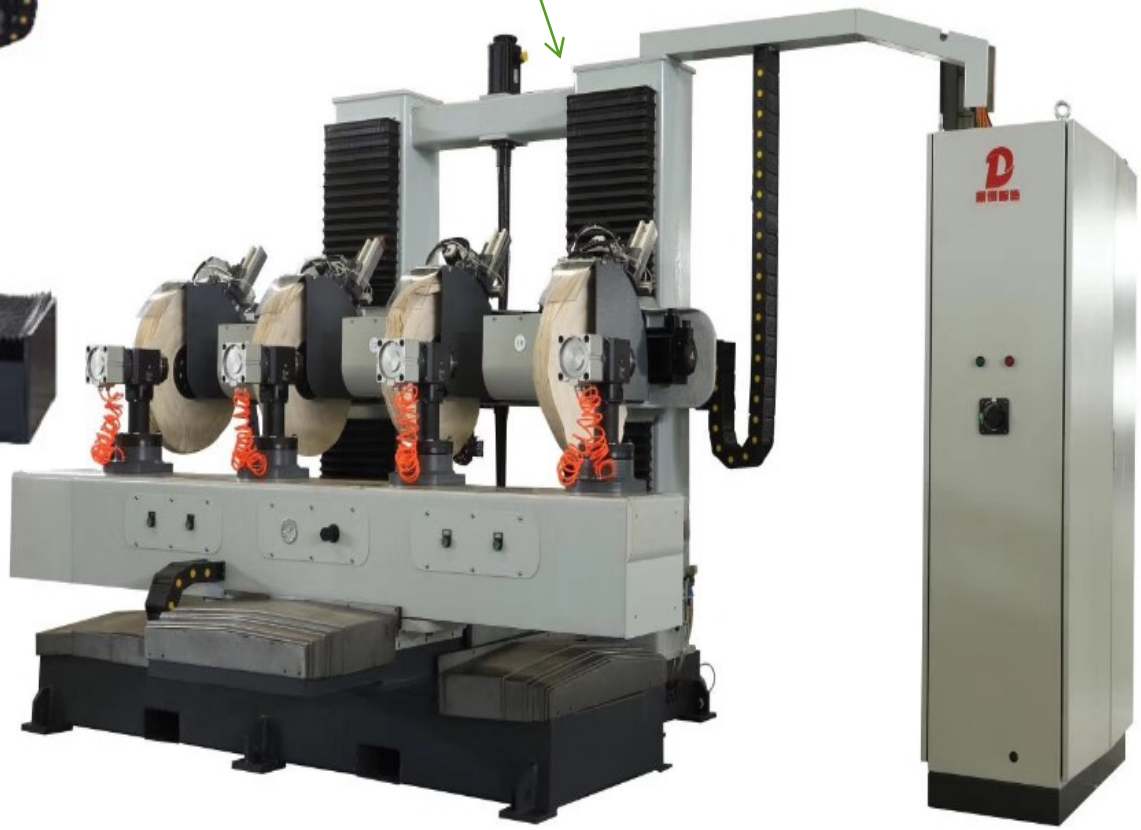

AUTO POLISHING MACHINE

DNR TECHNO SERVICES
Your Service Partner.....

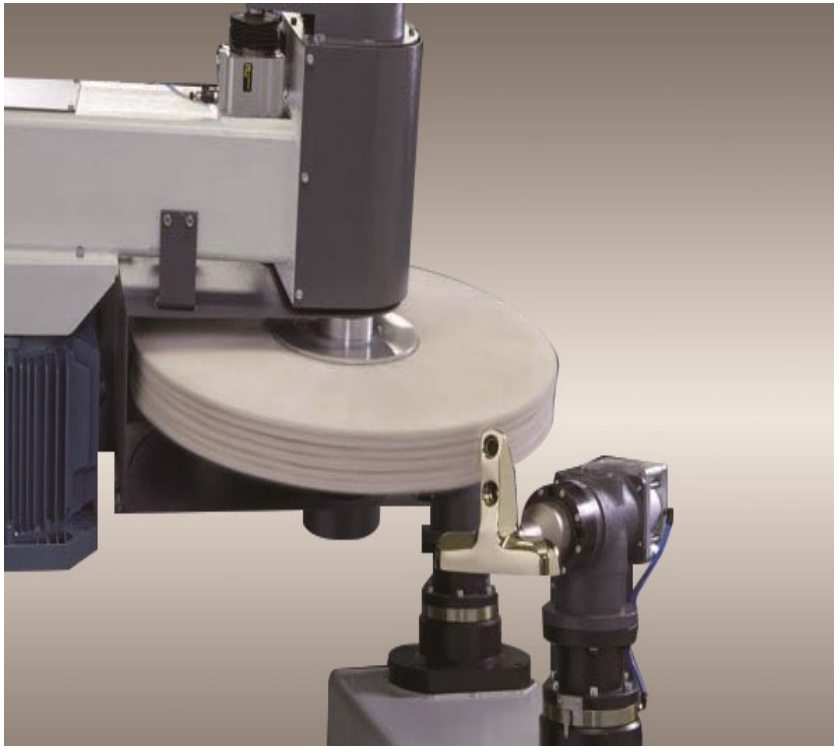

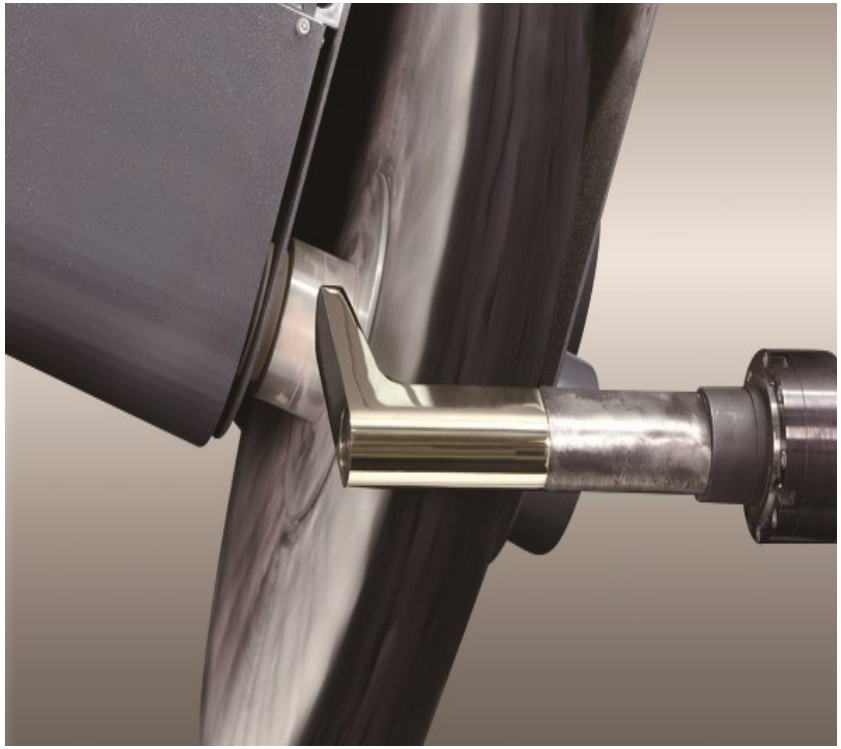

WATER LEAKAGE TESTING MACHINE

DNR TECHNO SERVICES
Your Service Partner.....

DNR TECHNO SERVICES

Your Service Partner.....

THANK YOU

+91-9711196735, +91-9911399919

E-mail: dnr.techservices@gmail.com