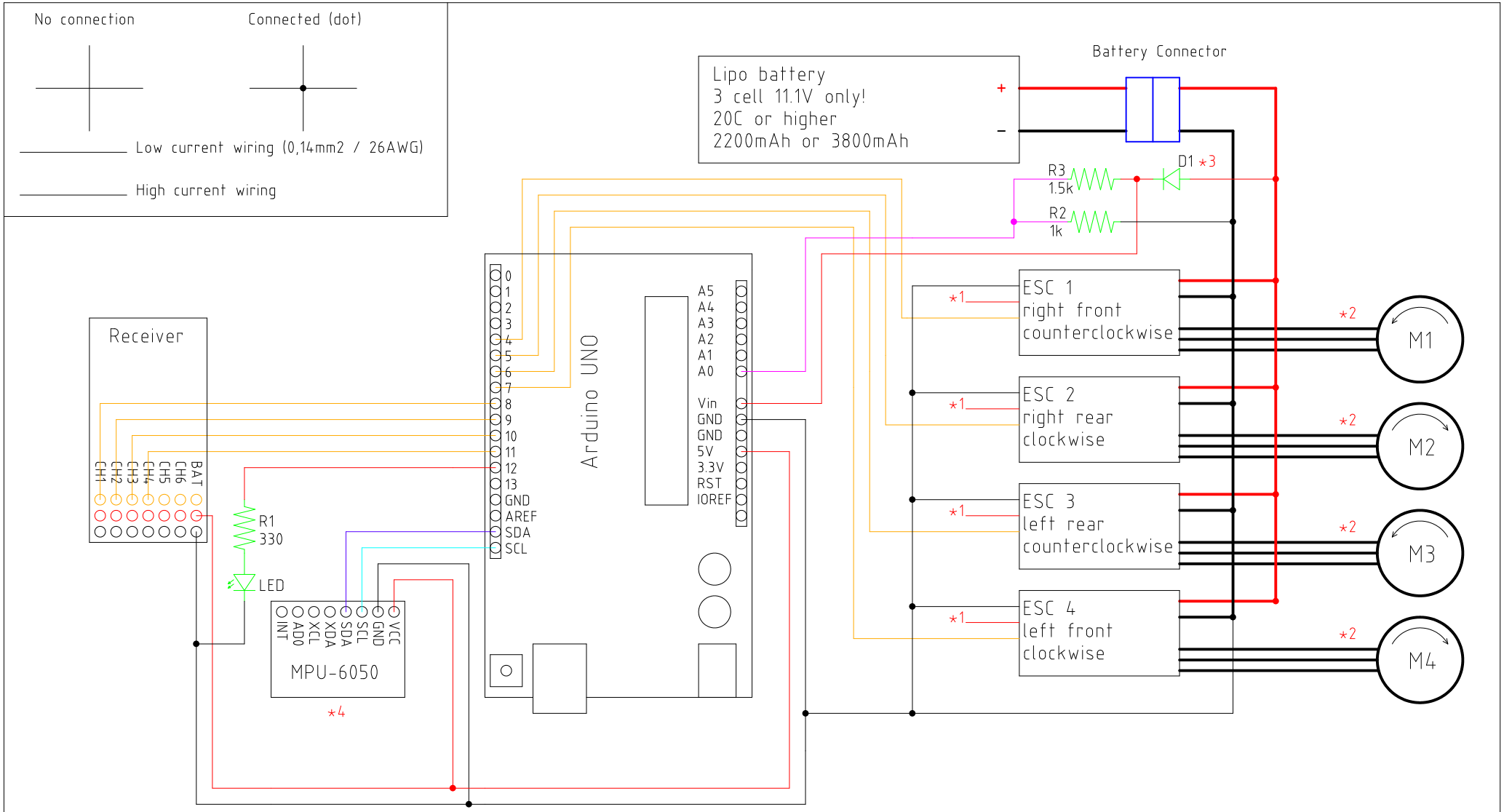

*4 = For the YMFC-3D the L3G4200D or L3GD20H can also be used
*3 = 1N4001 or similar
*2 = switch 2 of the 3 wires to reverse the direction of the motor
*1 = do not connect the +5V BEC wire

This drawing is provided "as is", without warranty of any kind. You are using it at your own risk.

Project: YMFC-3D V2 & YMFC-AL	
Name: Schematic	Drawed: J. Brokking
Date: 29-10-2016	Page: 1 of 1