POWER SYSTEM PROTECTION and SWITCHGEAR

Second Edition

Badri Ram • D N Vishwakarma

Copyrighted material

Tata McGraw-Hill

Published by Tata McGraw Hill Education Private Limited,
7 West Patel Nagar, New Delhi 110 008.

Power System Protection and Switchgear, 2/e

Copyright © 2011 by Tata McGraw Hill Education Private Limited

No part of this publication may be reproduced or distributed in any form or by any means, electronic, mechanical, photocopying, recording, or otherwise or stored in a database or retrieval system without the prior written permission of the publishers. The program listings (if any) may be entered, stored and executed in a computer system, but they may not be reproduced for publication.

This edition can be exported from India only by the publishers,
Tata McGraw Hill Education Private Limited.

ISBN (13): 978-0-07-107774-3
ISBN (10): 0-07-107774-X

Vice President and Managing Director—McGraw-Hill Education, Asia-Pacific Region: *Ajay Shukla*
Head—Higher Education Publishing and Marketing: *Vibha Mahajan*

Publishing Manager (SEM & Tech. Ed.): *Shalini Jha*
Senior Editorial Researcher: *Koyel Ghosh*
Executive—Editorial Services: *Sohini Mukherjee*
Senior Production Manager: *Satinder S Baveja*
Production Executive: *Anuj Kumar Shriwastava*
Marketing Manager—Higher Education: *Vijay S Jaganathan*

Senior Product Specialist: *John Mathews*

General Manager—Production: *Rajender P Ghansela*
Assistant General Manager—Production: *B L Dogra*

Information contained in this work has been obtained by Tata McGraw-Hill, from sources believed to be reliable. However, neither Tata McGraw-Hill nor its authors guarantee the accuracy or completeness of any information published herein, and neither Tata McGraw-Hill nor its authors shall be responsible for any errors, omissions, or damages arising out of use of this information. This work is published with the understanding that Tata McGraw-Hill and its authors are supplying information but are not attempting to render engineering or other professional services. If such services are required, the assistance of an appropriate professional should be sought.

Typeset at Bharati Composers, D-6/159, Sector-VI, Rohini, Delhi 110 085, and printed at A. P Offset, M-135, Panchsheel Garden Naveen Shahdara, Delhi 110 032

Cover: A.P. Offset

RYXCRRQWRQCCX

The McGraw-Hill Companies

Contents

Preface *xiii*

1. Introduction **1**

1.1 Need for Protective Systems *1*
1.2 Nature and Causes of Faults *2*
1.3 Types of Faults *3*
1.4 Effects of Faults *4*
1.5 Fault Statistics *5*
1.6 Evolution of Protective Relays *6*
1.7 Zones of Protection *9*
1.8 Primary and Back-up Protection *10*
1.9 Essential Qualities of Protection *11*
1.10 Performance of Protective Relays *12*
1.11 Classification of Protective Relays *14*
1.12 Components of a Protection System *18*
1.13 Classification of Protective Schemes *19*
1.14 Automatic Reclosing *20*
1.15 Current Transformers (CTs) for Protection *20*
1.16 Voltage Transformers (VTs) *22*
1.17 Basic Relay Terminology *23*
Exercises *31*

2. Relay Construction and Operating Principles **32**

2.1 Introduction *32*
2.2 Electromechanical Relays *33*
2.3 Static Relays *50*
2.4 Numerical Relays *61*
2.5 Comparison between Electromechanical Relays and Numerical Relays *63*
Exercises *64*

Copyrighted material

3. Current and Voltage Transformers 65

3.1 Introduction *65*
3.2 Current transformers (CTs) *65*
3.3 Voltage Transformers (VTs) *89*
3.4 Summation transformer *93*
3.5 Phase-sequence Current-segregating Network *94*
Exercises *95*

4. Fault Analysis 96

4.1 Introduction *96*
4.2 Per-Unit System *98*
4.3 One-Line Diagram *102*
4.4 Impedance and Reactance Diagrams *103*
4.5 Symmetrical Fault Analysis *107*
4.6 Symmetrical Components *146*
4.7 Unsymmetrical Fault Analysis *168*
4.8 Grounding (Earthing) *198*
Exercises *215*

5. Overcurrent Protection 221

5.1 Introduction *221*
5.2 Time-current Characteristics *221*
5.3 Current Setting *225*
5.4 Time Setting *226*
5.5 Overcurrent Protective Schemes *228*
5.6 Reverse Power or Directional Relay *234*
5.7 Protection of Parallel Feeders *237*
5.8 Protection of Ring Mains *237*
5.9 Earth Fault and Phase Fault Protection *238*
5.10 Combined Earth Fault and Phase Fault Protective Scheme *240*
5.11 Phase Fault Protective Scheme *240*
5.12 Directional Earth Fault Relay *240*
5.13 Static Overcurrent Relays *241*
5.14 Numerical Overcurrent Relays *245*
Exercises *246*

6. Distance Protection 249

6.1 Introduction *249*
6.2 Impedance Relay *250*
6.3 Reactance Relay *258*
6.4 MHO (Admittance or Angle Admittance) Relay *261*

Copyrighted material

6.5 Angle Impedance (OHM) Relay *267*
6.6 Input Quantities for Various Types of Distance Relays *269*
6.7 Sampling Comparator *270*
6.8 Effect of arc Resistance on the Performance of Distance Relays *271*
6.9 Reach of Distance Relays *274*
6.10 Effect of Power Surges (Power Swings) on the Performance of Distance Relays *277*
6.11 Effect of Line Length and Source Impedance on Distance Relays *281*
6.12 Selection of Distance Relays *283*
6.13 MHO Relay with Blinders *283*
6.14 Quadrilateral Relay *284*
6.15 Elliptical Relay *286*
6.16 Restricted MHO Relay *287*
6.17 Restricted Impedance Relay *289*
6.18 Restricted Directional Relay *289*
6.19 Restricted Reactance Relay *290*
6.20 Some Other Distance Relay Characteristics *290*
6.21 Swivelling Characteristics *293*
6.22 Choice of Characteristics for Different Zones of Protection *294*
6.23 Compensation for Correct Distance Measurement *295*
6.24 Reduction of Measuring Units *298*
6.25 Switched Schemes *299*
6.26 Auto-reclosing *301*
Appendix *304*
Exercises *305*

7. Pilot Relaying Schemes **310**
7.1 Introduction *310*
7.2 Wire Pilot Protection *310*
7.3 Carrier Current Protection *315*
Exercises *326*

8. Differential Protection **327**
8.1 Introduction *327*
8.2 Differential Relays *328*
8.3 Simple (Basic) Differential Protection *329*
8.4 Percentage or Biased Differential Relay *339*

Copyrighted material

8.5 Differential Protection of 3-Phase Circuits *346*
8.6 Balanced (Opposed) Voltage Differential Protection *346*
Exercises *347*

9. Rotating Machines Protection **349**
9.1 Introduction *349*
9.2 Protection of Generators *349*
Exercises *361*

10. Transformer and Buszone Protection **364**
10.1 Introduction *364*
10.2 Transformer Protection *364*
10.3 Buszone Protection *375*
10.4 Frame Leakage Protection *376*
Exercises *377*

11. Numerical Protection **379**
11.1 Introduction *379*
11.2 Numerical Relay *381*
11.3 Data Acquisition System (DAS) *386*
11.4 Numerical Relaying Algorithms *390*
11.5 Mann–Morrison Technique *390*
11.6 Differential Equation Technique *391*
11.7 Discrete Fourier Transform Technique *393*
11.8 Walsh–Hadamard Transform Technique *402*
11.9 Rationalised Haar Transform Technique *416*
11.10 Block Pulse Functions Technique *427*
11.11 Wavelet Transform Technique *433*
11.12 Removal of the dc Offset *441*
11.13 Numerical Overcurrent Protection *442*
11.14 Numerical Distance Protection *444*
11.15 Numerical Differential Protection *445*
Exercises *450*

12. Microprocessor-Based Numerical Protective Relays **452**
12.1 Introduction *452*
12.2 IC Elements and Circuits for Interfaces *453*
12.3 A/D Converter, Analog Multiplexer, S/H Circuit *457*
12.4 Overcurrent Relays *471*
12.5 Impedance Relay *475*
12.6 Directional Relay *481*

Copyrighted material

12.7 Reactance Relay *484*
12.8 Generalised Mathematical Expression for Distance Relays *487*
12.9 Measurement of R and X *489*
12.10 Mho and Offset Mho Relays *492*
12.11 Quadrilateral Relay *498*
12.12 Generalised Interface for Distance Relays *501*
12.13 Microprocessor Implementation of Digital Distance Relaying Algorithms *502*
Exercises *504*

13. Artificial Intelligence Based Numerical Protection 506
13.1 Introduction *506*
13.2 Artificial Neural Network (ANN) *507*
13.3 Fuzzy Logic *518*
13.4 Application of Artificial Intelligence to Power System Protection *520*
13.5 Application of ANN to Overcurrent Protection *522*
13.6 Application of ANN to Transmission Line Protection *522*
13.7 Neural Network Based Directional Relay *523*
13.8 ANN Modular Approach for Fault Detection, Classification and Location *523*
13.9 Wavelet Fuzzy Combined Approach for Fault Classification *525*
13.10 Application of ANN to Power Transformer Protection *526*
13.11 Power Transformer Protection Based on Neural Network and Fuzzy Logic *528*
13.12 Power Transformer Protection Based Upon Combined Wavelet Transform and Neural Network *529*
13.13 Application of ANN to Generator Protection *530*
Exercises *531*

14. Circuit Breakers 533
14.1 Introduction *533*
14.2 Fault Clearing Time of a Circuit Breaker *534*
14.3 Arc Voltage *535*
14.4 Arc Interruption *535*
14.5 Restriking Voltage and Recovery Voltage *537*
14.6 Resistance Switching *541*
14.7 Current Chopping *544*

Copyrighted material

14.8 Interruption of Capacitive Current *545*
14.9 Classification of Circuit Breakers *546*
14.10 Air-Break Circuit Breakers *547*
14.11 Oil Circuit Breakers *548*
14.12 Air Blast Circuit Breakers *553*
14.13 SF_6 Circuit Breakers *555*
14.14 Vacuum Circuit Breakers *562*
14.15 Operating Mechanism *564*
14.16 Selection of Circuit Breakers *565*
14.17 High Voltage DC (HVDC) Circuit Breakers *566*
14.18 Rating of Circuit Breakers *567*
14.19 Testing of Circuit Breakers *570*
Exercises *575*

15. Fuses **578**
15.1 Introduction *578*
15.2 Definitions *578*
15.3 Fuse Characteristics *582*
15.4 Types of Fuses *582*
15.5 Applications of HRC Fuses *588*
15.6 Selection of Fuses *588*
15.7 Discrimination *589*
Exercises *590*

16. Protection Against Overvoltages **592**
16.1 Causes of Overvoltages *592*
16.2 Lightning Phenomena *593*
16.3 Wave Shape of Voltage Due to Lightning *595*
16.4 Overvoltages Due to Lightning *596*
16.5 Klydonograph and Magnetic Link *598*
16.6 Protection of Transmission Lines against Direct Lightning Strokes *599*
16.7 Protection of Stations and Sub-stations from Direct Strokes *603*
16.8 Protection Against Travelling Waves *605*
16.9 Peterson Coil *615*
16.10 Insulation Coordination *617*
16.11 Basic Impulse Insulation Level (BIIL) *618*
Exercises *619*

Copyrighted material

17. Modern Trends in Power System Protection **621**

17.1 Introduction *621*

17.2 Gas Insulated Substation/Switchgear (GIS) *623*

17.3 Frequency Relays and Load-shedding *628*

17.4 Field Programmable Gate Arrays (FPGA) Based Relays *631*

17.5 Adaptive Protection *637*

17.6 Integrated Protection and Control *639*

17.7 Relay Reliability *640*

17.8 Advantages of Fast Fault Clearing *641*

Exercises *641*

Appendix A: *8086 Assembly Language Programming* *643*

Appendix B: *Orthogonal and Orthonormal Functions* *650*

Appendix C: *Gray-code to Binary Conversion* *651*

Appendix D: *Kronecker (or Direct) Product of Matrices* *652*

Index ***653***

Copyrighted material

Copyrighted material

Preface to the Second Edition

The authors are thankful to the readers including teachers, students and engineers who have given overwhelming response to the first edition of the book. The response to the first edition of the book has been so encouraging that there have been about 40 reprints of this edition.

The proper operation of a power system requires an efficient, reliable and fast-acting protection scheme, which consists of protective relays and switching devices. There has been continuous improvement in the design of relaying schemes. In order to provide a foolproof protection system to the power system, innovative technology is complementing the conventional protection system. With revolutionary changes in the power system and tremendous developments in computer hardware technology, numerical relays based on microprocessors or microcontrollers are fast replacing the conventional protective relays.

Revision Rationale

Keeping in view the rapid technological advancement in power system protection, we have revised the present second edition of the book thoroughly and have added many new chapters. This edition of the book will be very useful to undergraduate and postgraduate students of electrical engineering, research scholars, students preparing for professional examinations and practicing engineers engaged in system-protection work. In revising this edition, we gratefully acknowledge the constructive suggestions, critical comments and inspiration received from readers and well-wishers for the improvement of the book.

New Additions

The present second edition of the book contains seven additional chapters, viz., *Chapter 3* on Current and Voltage Transformers, *Chapter 4* on Fault Analysis, *Chapter 8* on Differential Protection, *Chapter 9* on Rotating Machines Protection, *Chapter 11* on Numerical Protection, *Chapter 13* on Artificial Intelligence Based Numerical Protection, and *Chapter 17* on Modern Trends in Power System Protection. With the addition of these new chapters, the present edition of the book has become considerably up-to-date.

Chapter Organisation

Chapter 1 on Introduction now stands completely rewritten with addition of new sections on Performance of Protective Relays and Components of a Protection System and many new relay terminologies.

Copyrighted material

Chapter 2 on Relay Construction and Operating Principles has also undergone a thorough revision.

Chapter 3, a new chapter on Current and Voltage Transformers, describes the construction and operating principles of various types of current and voltage transformers (transducers) required in protection systems.

Chapter 4, a new chapter on Fault Analysis, discusses the per unit system, symmetrical fault analysis, symmetrical components, unsymmetrical fault analysis and grounding. In order to ensure adequate protection, the student must clearly understand the conditions existing on a power system during faults. These abnormal conditions provide the discriminating means for relay operation. Hence, fault analysis is very essential for the design of a suitable protection system.

Chapter 5 on Overcurrent Protection is the revised and renumbered Chapter 3 of the first edition. This chapter deals with overcurrent protection detailing electromagnetic and static overcurrent relays, directional relays, and overcurrent protective schemes.

Similarly, **Chapter 6** on Distance Protection is the revised and renumbered Chapter 4 of the first edition. It discusses different types of electromagnetic and static distance relays, arc resistance and power swings on performance of distance relays, realization of different types of operating characteristics of distance relays and auto-reclosing.

Chapter 7 on Pilot Relaying Schemes is the same as Chapter 5 of first edition. It deals with pilot protection, wire pilot relaying and carrier pilot relaying.

Chapter 8, a new chapter on Differential Protection, discusses construction, operating principles and performance of various differential relays for differential protection.

Chapter 9, a new chapter on Rotating Machines Protection, deals with protection of generators and motors. We developed it by splitting Chapter 6 of the first edition and adding motor protection. We then used the remaining parts of Chapter 6 to develop **Chapter 10**, a new chapter on Transformer and Bus Zone Protection.

Chapter 11, a new chapter on Numerical Protection, discusses the numerical relay, data acquisition system, numerical relaying algorithms, numerical overcurrent protection, numerical distance protection and numerical differential protection of generator and power transformer. Numerical relay, which is the main component of the numerical protection scheme, is the latest development in the area of protection. The basis of this topic is numerical (digital) devices, e.g., microprocessors, microcontrollers, Digital Signal Processors (DSPs), etc., developed because of tremendous advancement in VLSI and computer hardware technology.

Chapter 12, a new chapter on Microprocessor Based Numerical Protective Relays, comprises some portions of Chapters 7 and 8 of the first edition and some new additions. It describes microprocessor-based overcurrent and distance relays and digital filtering algorithms for removal of dc offset from relaying signals and computation of R and X of a transmission line.

Chapter 13, a new chapter on Artificial Intelligence Based Numerical Protection, deals with application of Artificial Neural Networks (ANNs) and Fuzzy Logic to numerical protection of power system.

Copyrighted material

Chapter 14 on Circuit Breakers is the thoroughly revised and renumbered Chapter 9 of the first edition. It covers circuit breakers explaining the principle of circuit interruption and different types of circuit breakers.

Chapter 15 on Fuses is the same as Chapter 10 of the first edition. It describes the construction and operating principle of different types of fuses and gives the definitions of different terminologies related to a fuse. Again, **Chapter 16** is the same as Chapter 11 of the first edition, and is on Protection Against Overvoltages. **Chapter 17**, a new chapter on Modern Trends in Power System Protection, discusses the modern topics of power system protection such as Gas Insulated Substation (GIS), frequency relays and loadshedding, Field Programmable Gate Arrays (FPGA) based relays, adaptive protection, integrated protection and control, Supervisory Control And Data Acquisition (SCADA), travelling wave relay, etc.

Acknowledgements

We owe a special note of thanks to Mr. Harshit Nath who helped us a lot in the preparation of the manuscript of this edition. We also express our gratitude to Ms. Amrita Sinha and Ms. Kiran Srivastava for their constructive suggestions and cooperation during the manuscript-preparation stage of this edition. At this stage, we would also like to thank the many reviewers who took out time from their busy schedules and sent us their suggestions, all of which went a long way in helping us revise the book. We mention their names below.

Zakir Hussain	*National Institute of Technology Hamirpur, Himachal Pradesh*
Rakesh Kumar	*Global Institute of Technology, Greater Noida, Uttar Pradesh*
Sardindu Ghosh	*National Institute of Technology Rourkela, Orissa*
R C Jha	*Birla Institute of Technology Mesra, Ranchi, Jharkhand*
V B Babaria	*Lalbhai Dalpatbhai College of Engineering, Ahmadabad, Gujarat*
R Senthil Kumar	*Bannari Amman Institute of Technology, Sathyamangalam, Erode, Tamil Nadu*
K Lakshmi	*K S Rangasamy College of Engineering, Tiruchengode, Tamil Nadu*
S P Rajkumar	*Sri Ramakrishna Engineering College, Coimbatore, Tamil Nadu*
C V K Bhanu	*Gayatri Vidya Parishad College of Engineering, Vishakhapatnam, Andhra Pradesh*
M Narendra Kumar	*Guru Nanak Engineering College, Hyderabad, Andhra Pradesh*
S Ram Mohan Rao	*College of Engineering, Andhra University, Vishakhapatnam, Andhra Pradesh*

We wish to convey our feelings of indebtedness to our colleagues and students for the encouragement and useful suggestions they gave us while we were revising the

Copyrighted material

book. Finally, we state our heartfelt gratitude to our respective families for the love, patience and inspiration, which they are never short of showering on us.

We welcome constructive criticism and suggestions from all concerned for further improvement of the future editions of the book. Please feel free to email your views at the publisher's website mentioned below.

Badri Ram

D N Vishwakarma

Feedback

We invite comments and suggestions from all the readers. You may e-mail your feedback to tmh.elefeedback@gmail.com (*kindly mention the title and author name in the subject line*). Also, please report any piracy of the book spotted by you.

Copyrighted material

1 Introduction

1.1 NEED FOR PROTECTIVE SYSTEMS

An electrical power system consists of generators, transformers, transmission and distribution lines, etc. Short circuits and other abnormal conditions often occur on a power system. The heavy current associated with short circuits is likely to cause damage to equipment if suitable protective relays and circuit breakers are not provided for the protection of each section of the power system. Short circuits are usually called faults by power engineers. Strictly speaking, the term 'fault' simply means a 'defect'. Some defects, other than short circuits, are also termed as faults. For example, the failure of conducting path due to a break in a conductor is a type of fault.

If a fault occurs in an element of a power system, an automatic protective device is needed to isolate the faulty element as quickly as possible to keep the healthy section of the system in normal operation. The fault must be cleared within a fraction of a second. If a short circuit persists on a system for a longer, it may cause damage to some important sections of the system. A heavy short circuit current may cause a fire. It may spread in the system and damage a part of it. The system voltage may reduce to a low level and individual generators in a power station or groups of generators in different power stations may lose synchronism. Thus, an uncleared heavy short circuit may cause the total failure of the system.

A protective system includes circuit breakers, transducers (CTs and VTs), and protective relays to isolate the faulty section of the power system from the healthy sections. A circuit breaker can disconnect the faulty element of the system when it is called upon to do so by the protective relay. Transducers (CTs and VTs) are used to reduce currents and voltages to lower values and to isolate protective relays from the high voltages of the power system. The function of a protective relay is to detect and locate a fault and issue a command to the circuit breaker to disconnect the faulty element. It is a device which senses abnormal conditions on a power system by constantly monitoring electrical quantities of the systems, which differ under normal and abnormal conditions. The basic electrical quantities which are likely to change during abnormal conditions are current, voltage, phase-angle (direction) and frequency. Protective relays utilise one or more of these quantities to detect abnormal conditions on a power system.

Protection is needed not only against short circuits but also against any other abnormal conditions which may arise on a power system. A few examples of other abnormal conditions are overspeed of generators and motors, overvoltage, under-

Copyrighted material

frequency, loss of excitation, overheating of stator and rotor of an alternator etc. Protective relays are also provided to detect such abnormal conditions and issue alarm signals to alert operators or trip circuit breaker.

A protective relay does not anticipate or prevent the occurrence of a fault, rather it takes action only after a fault has occurred. However, one exception to this is the Buchholz relay, a gas actuated relay, which is used for the protection of power transformers. Sometimes, a slow breakdown of insulation due to a minor arc may take place in a transformer, resulting in the generation of heat and decomposition of the transformer's oil and solid insulation. Such a condition produces a gas which is collected in a gas chamber of the Buchholz relay. When a specified amount of gas is accumulated, the Buchholz relay operates an alarm. This gives an early warning of incipient faults. The transformer is taken out of service for repair before the incipient fault grows into a serious one. Thus, the occurrence of a major fault is prevented. If the gas evolves rapidly, the Buchholz relay trips the circuit breaker instantly.

The cost of the protective equipment generally works out to be about 5% of the total cost of the system.

1.2 NATURE AND CAUSES OF FAULTS

Faults are caused either by insulation failures or by conducting path failures. The failure of insulation results in short circuits which are very harmful as they may damage some equipment of the power system. Most of the faults on transmission and distribution lines are caused by overvoltages due to lightning or switching surges, or by external conducting objects falling on overhead lines. Overvoltages due to lighting or switching surges cause flashover on the surface of insulators resulting in short circuits. Sometimes, insulators get punctured or break. Sometimes, certain foreign particles, such as fine cement dust or soot in industrial areas or salt in coastal areas or any dirt in general accumulates on the surface of string and pin insulators. This reduces their insulation strength and causes flashovers. Short circuits are also caused by tree branches or other conducting objects falling on the overhead lines.

Birds also may cause faults on overhead lines if their bodies touch one of the phases and the earth wire (or the metallic supporting structure which is at earth potential). If the conductors are broken, there is a failure of the conducting path and the conductor becomes open-circuited. If the broken conductor falls to the ground, it results in a short circuit. Joint failures on cables or overhead lines are also a cause of failure of the conducting path. The opening of one or two of the three phases makes the system unbalanced. Unbalanced currents flowing in rotating machines set up harmonics, thereby heating the machines in short periods of time. Therefore, unbalancing of the lines is not allowed in the normal operation of a power system. Other causes of faults on overhead lines are: direct lightning strokes, aircraft, snakes, ice and snow loading, abnormal loading, storms, earthquakes, creepers, etc. In the case of cables, transformers, generators and other equipment, the causes of faults are: failure of the solid insulation due to aging, heat, moisture or overvoltage, mechanical damage, accidental contact with earth or earthed screens, flashover due to overvoltages, etc.

Copyrighted material

Sometimes, circuit breakers may trip due to errors in the switching operation, testing or maintenance work, wrong connections, defects in protective devices, etc.

Certain faults occur due to the poor quality of system components or because of a faulty system design. Hence, the occurrence of such faults can be reduced by improving the system design, by using components and materials of good quality and by better operation and maintenance.

1.3 TYPES OF FAULTS

Two broad classifications of faults are

(i) Symmetrical faults

(ii) Unsymmetrical faults

1.3.1 Symmetrical Faults

A three-phase (3-ϕ) fault is called a symmetrical type of fault. In a 3-ϕ fault, all the three phases are short circuited. There may be two situations—all the three phases may be short circuited to the ground or they may be short-circuited without involving the ground. A 3-ϕ short circuit is generally treated as a standard fault to determine the system fault level.

1.3.2 Unsymmetrical Faults

Single-phase to ground, two-phase to ground, phase-to-phase short circuits; single-phase open circuit and two-phase open circuit are unsymmetrical types of faults.

Single-phase to Ground (L-G) Fault

A short circuit between any one of the phase conductors and earth is called a single phase to ground fault. It may be due to the failure of the insulation between a phase conductor and the earth, or due to phase conductor breaking and falling to the ground.

Two-phase to Ground (2L-G) Fault

A short circuit between any two phases and the earth is called a double line to ground or a two-phase to ground fault.

Phase-to-Phase (L-L) Fault

A short circuit between any two phases is called a line to line or phase-to-phase fault.

Open-circuited Phases

This type of fault is caused by a break in the conducting path. Such faults occur when one or more phase conductors break or a cable joint or a joint on the overhead lines fails. Such situations may also arise when circuit breakers or isolators open but fail to close one or more phases. Due to the opening of one or two phases, unbalanced currents flow in the system, thereby heating rotating machines. Protective schemes must be provided to deal with such abnormal situations.

Copyrighted material

Winding Faults

All types of faults discussed above also occur on the alternator, motor and transformer windings. In addition to these types of faults, there is one more type of fault, namely the short circuiting of turns which occurs on machine windings.

1.3.3 Simultaneous Faults

Two or more faults occurring simultaneously on a system are known as multiple or simultaneous faults. In simultaneous faults, the same or different types of faults may occur at the same or different points of the system. An example of two different types of faults occurring at the same point is a single line to ground fault on one phase and breaking of the conductor of another phase, both simultaneously present at the same point. The simultaneous presence of an L-G fault at one point and a second L-G fault on another phase at some other point is an example of two faults of the same type at two different points. If these two L-G faults are on the same section of the line, they are treated as a double line to ground fault. If they occur in different line sections, it is known as a *cross-country earth fault*. Cross-country faults are common on systems grounded through high impedance or Peterson coil but they are rare on solidly grounded systems.

1.4 EFFECTS OF FAULTS

The most dangerous type of fault is a short circuit as it may have the following effects on a power system, if it remains uncleared.

(i) Heavy short circuit current may cause damage to equipment or any other element of the system due to overheating and high mechanical forces set up due to heavy current.

(ii) Arcs associated with short circuits may cause fire hazards. Such fires, resulting from arcing, may destroy the faulty element of the system. There is also a possibility of the fire spreading to other parts of the system if the fault is not isolated quickly.

(iii) There may be reduction in the supply voltage of the healthy feeders, resulting in the loss of industrial loads.

(iv) Short circuits may cause the unbalancing of supply voltages and currents, thereby heating rotating machines.

(v) There may be a loss of system stability. Individual generators in a power station may lose synchronism, resulting in a complete shutdown of the system. Loss of stability of interconnected systems may also result. Subsystems may maintain supply for their individual zones but load shedding would have to be resorted in the sub-system which was receiving power from the other subsystem before the occurrence of the fault.

(vi) The above faults may cause an interruption of supply to consumers, thereby causing a loss of revenue.

High grade, high speed, reliable protective devices are the essential requirements of a power system to minimise the effects of faults and other abnormalities.

Copyrighted material

1.5 FAULT STATISTICS

For the design and application of protective scheme, it is very useful to have an idea of the frequency of occurrence of faults on various elements of power system. Usually the power stations are situated far away from the load centres, resulting in hundreds of kilometers' length of overhead lines being exposed to atmospheric conditions. The chances of faults occurring due to storms, falling of external objects on the lines, flashovers resulting from dirt deposits on insulators, etc., are greater for overhead lines than for other parts of the power system. Table 1.1 gives an approximate idea of the fault statistics.

Table 1.1 Percentage Distribution of Faults in Various Elements of a Power System

Element	*% of Total Faults*
Overhead Lines	50
Underground Cables	9
Transformers	10
Generators	7
Switchgears	12
CTs, VTs, Relays	
Control Equipment, etc.	12

From Table 1.1, it is evident that 50% of the total faults occur on overhead lines. Hence it is overhead lines that require more attention while planning and designing protective schemes for a power system.

Table 1.2 shows the frequency of occurrence of different types of faults (mainly the different types of short circuits) on overhead lines. From the table it is evident that the frequency of line to ground faults is more than any other type of fault, and hence the protection against L-G fault requires greater attention in planning and design of protective schemes for overhead lines.

Table 1.2 Frequency of Occurrence of Different Types of Faults on Overhead Lines

Types of Faults	*Fault Symbol*	*% of Total Faults*
Line to Ground	L-G	85
Line to Line	L-L	8
Double Line to Ground	2L-G	5
Three Phase	3-ϕ	2

In the case of cables, 50% of the faults occur in cables and 50% at end junctions. Cable faults are usually of a permanent nature and hence, automatic reclosures are not recommended for cables.

Copyrighted material

1.6 EVOLUTION OF PROTECTIVE RELAYS

In the very early days of the power industry, small generators were used to supply local loads and fuses were the automatic devices to isolate the faulty equipment. They were effective and their performance was quite satisfactory for small systems.

However, they suffered from the disadvantage of requiring replacement before the supply could be restored. For important lines, frequent interruption in power supply is undesirable. This inconvenience was overcome with the introduction of circuit breakers and protective relays. Attracted armatured-type electromagnetic relays were first introduced. They were fast, simple and economical. As auxiliary relays their use will continue even in future, due to their simplicity and low cost. This type of relays operate through an armature which is attracted to an electromagnet or thought a plunger drawn into a solenoid. Plunger-type electromagnetic relays formed instantaneous units for detecting overcurrent or over-voltage conditions. Attracted armature-type electromagnetic relays work on both ac and dc. Later on, induction-type electromagnetic relays were developed. These relays use the electromagnetic induction principle for their operation and hence work on ac only. Since both attracted armature and induction-type electromagnetic relays operate by mechanical forces generated on moving parts due to electromagnetic forces created by the input quantities, these relays were called electromechanical relays. Induction disc-type inverse time-current relays were developed in the early 1920s to meet the selectivity requirement. They were used for overcurrent protection. For directional and distance relays, induction-cup-type units were widely used throughout the world. An induction-cup-type unit was fast and accurate due to its higher torque/inertia ratio. For greater sensitivity and accuracy, polarised dc relays are being used since 1939.

Attracted armature-type balanced-beam relays provided differential protection, distance protection as well as low burden overcurrent units. These relays operated when the magnitude of an operating signal was larger than the magnitude of the restraining signal. These relays were classified as *amplitude comparators*.

Single-input induction-type relays provided operations with time delays. Two-input induction type relays provided directional protection. Two- and three-input induction-type relays also provided distance protection. The operation of these relays was dependant on the phase displacement between the applied electrical inputs. These relays were classified as *phase comparators*.

In 1947, rectifier bridge-type comparators were developed in Norway and Germany. Polarised dc relays, energised from rectifier bridge comparators, challenged the position of induction-cup-type relays. They are widely used for the realisation of distance relay characteristics.

Electronic relays using vacuum tubes first appeared in the literature in 1928 and continued up to 1956. They were not accepted because of their complexity, short life of vacuum tubes and incorrect operation under transient conditions. But electronic valves were used in carrier equipment. There was automatic checking of the carrier channel. An alarm was sounded if any tube became defective, and it was replaced immediately.

Copyrighted material

Magnetic amplifiers were also used in protective relays in the past. A magnetic amplifier consists of a transformer and a separate dc winding. As the transformer action is controlled by the dc winding, the device is also known as *transductor*. This type of relay is rugged but slow in action. At present, such relays are not used.

Hall crystals were also used to construct phase comparators. Because of their low output and high-temperature errors, such relays have not been widely adopted except in Russian countries.

The first transistorised relay was developed in 1949, soon after the innovation of the transistor. Various kinds of static relays using solid-state devices were developed in the fifties. Multi-input comparators giving quadrilateral characteristics were developed in the sixties. Static relays possess the advantages of low burden on the CT and VT, fast operation, absence of mechanical inertia and contact troubles, long life and less maintenance. As static relays proved to be superior to electromechanical relays, they were used for the protection of important lines, power stations and sub-stations. But they did not replace electromechanical relays. Static relays were treated as an addition to the family of relays. In most static relays, the output or slave relay is a polarised dc relay which is an electromechanical relay. This can be replaced by a thyristor circuit, but it is used because of its low cost. Electromechanical relays have continued to be used because of their simplicity and low cost. Their maintenance can be done by less qualified personnel, whereas the maintenance and repair of static relays requires personnel trained in solid-state devices. Static relays using digital techniques have also been developed.

Static relays appeared to be the technology poised to replace the electromechanical counterparts in the late sixties when researchers ventured into the use of computers for power system protection. Their attempts and the advances in the Very Large Scale Integrated (VLSI) technology and software techniques in the seventies led to the development of microprocessor-based relays that were first offered as commercial devices in 1979. Early designs of these relays used the fundamental approaches that were previously used in the electromechanical and static relays.

In spite of the developments of complex algorithms for implementing protection functions, the microprocessor-based relays marketed in the eighties did not incorporate them. These relays performed basic functions, took advantage of the hybrid analog and digital techniques, and offered a good economical solution. At present, in microprocessor-based relays, different relaying algorithms are used to process the acquired information. Microprocessor/Microntroller-based relays are called numerical relays specifically if they calculate the algorithm numerically.

The modern power networks which have grown both in size and complexity require fast accurate and reliable protective schemes to protect major equipment and to maintain system stability. Increasing interest is being shown in the use of on-line digital computers for protection. The concept of numerical protection employing computers which shows much promise in providing improved performance has evolved during the past three decades. In the beginning, the numerical protection (also known as digital protection) philosophy was to use a large computer system for the total protection of the power system. This protection system proved to be very costly and required large space. If a computer is required to perform other

Copyrighted material

control functions in addition to protection, it can prove to be economical. With the tremendous developments in VLSI and computer hardware technology, microprocessors that appeared in the seventies have evolved and made remarkable progress in recent years. The latest fascinating innovation in the field of computer technology is the development of microprocessors, microcontrollers, Digital Signal Processors (DSPs) and Field Programmable Gate Arrays (FPGAs) which are making in-roads in every activity of mankind. With the development of fast, economical, powerful and sophisticated microprocessors, microcontrollers, DSPs and FPGAs, there is a growing trend to develop numerical relays based on these devices.

The conventional relays of electromechanical and static types had no significant drawbacks in their protection functions, but the additional features offered by microprocessor technologies encouraged the evolution of relays that introduced many changes to the power industry. Economics and additionally, functionality were probably the main factors that forced the power industry to accept and cope with the changes brought by microprocessor/microcontroller-based numerical relays.

Multifunction numerical relays were introduced in the market in the late eighties. These devices reduced the product and installation costs drastically. This trend has continued until now and has converted microprocessor/microcontroller based numerical relays to powerful tools in the modern substations.

The inherent advantage of microprocessor/microcontroller-based protective schemes, over the existing static relays with one or very limited range of applications, is their flexibility. The application of microprocessors and microcontrollers to protective relays also result in the availability of faster, more accurate and reliable relaying units. A microprocessor or a microcontroller increases the flexibility of a relay due to its programmable approach. It provides protection at low cost and competes with conventional relays. A number of relaying characteristics can be realised using the same interface. Using a multiplexer, the microprocessor/microcontroller can obtain the required input signals for the realisation of a particular relaying characteristic. Different programs can be used for different characteristics. Individual types and number of relaying units are reduced to a great extent, resulting in a very compact protective scheme. Field tests have demonstrated their feasibility and some schemes are under investigation. A number of schemes have been put into service and their performances have been found to be satisfactory. Microprocessor/microcontroller-based numerical protective schemes are being widely used in the field.

At present, many trends are emerging. These include common hardware platforms, configuring the software to perform different functions, integrating protection with substation control and substituting cables carrying voltages and currents with optical fibre cables carrying signals in the form of polarized light.

On the software side, Artificial Intelligence (AI) techniques, such as Artificial Neural Networks (ANNs) and Fuzzy Logic Systems have attracted the attention of researchers and protection engineers and they are being applied to power system protection. ANN and Fuzzy Logic based intelligent numerical relays for overcurrent protection, distance protection of transmission lines and differential protection of transformers and generators are presently under active research and development stage. Adaptive protection is also being applied to protection practices. Recent

Copyrighted material

work in this area includes feedback systems in which relays continuously monitor the operating state of the power system and automatically reconfigure themselves for providing optimal protection.

1.7 ZONES OF PROTECTION

A power system contains generators, transformers, bus bars, transmission and distribution lines, etc. There is a separate protective scheme for each piece of equipment or element of the power system, such as generator protection, transformer protection, transmission line protection, bus bar protection, etc. Thus, a power system is divided into a number of zones for protection. A protective zone covers one or at the most two elements of a power system. The protective zones are planned in such a way that the entire power system is collectively covered by them, and thus, no part of the system is left unprotected. The various protective zones of a typical power system are shown in Fig. 1.1. Adjacent protective zones must overlap each other, failing which a fault on the boundary of the zones may not lie in any of the zones (this may be due to errors in the measurement of actuating quantities, etc.), and hence no circuit breaker would trip. Thus, the overlapping between the adjacent zones is unavoidable. If a fault occurs in the overlapping zone in a properly protected scheme, more circuit breakers than the minimum necessary to isolate the faulty element of the system would trip. A relatively low extent of overlap reduces the probability of faults in this region and consequently, tripping of too many breakers does not occur frequently.

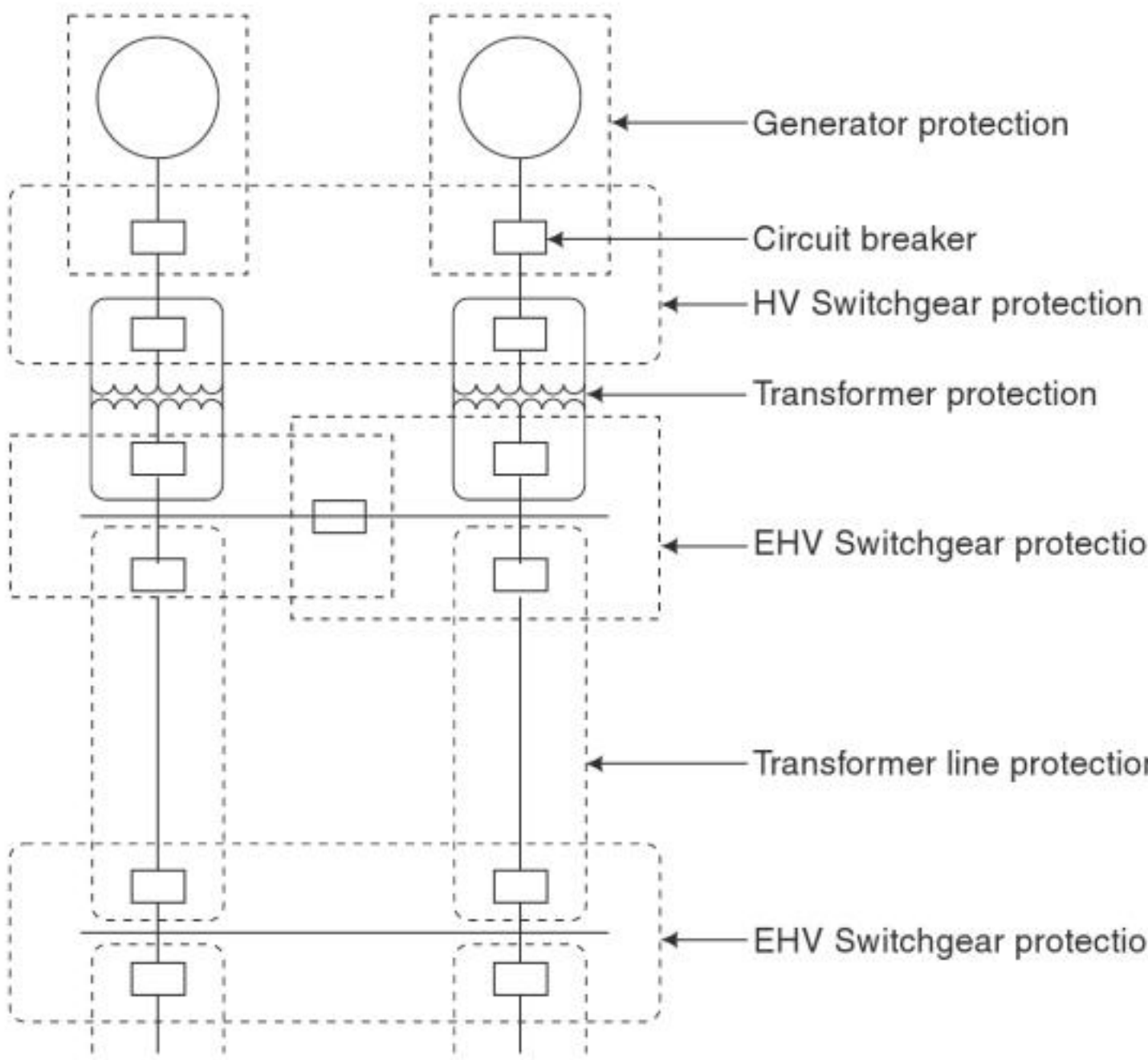

Fig. 1.1 *Zones of protection*

1.8 PRIMARY AND BACK-UP PROTECTION

It has already been explained that a power system is divided into various zones for its protection. There is a suitable protective scheme for each zone. If a fault occurs in a particular zone, it is the duty of the primary relays of that zone to isolate the faulty element. The primary relay is the first line of defense. If due to any reason, the primary relay fails to operate, there is a back-up protective scheme to clear the fault as a second line of defence.

The causes of failures of protective scheme may be due to the failure of various elements, as mentioned in Table 1.3. The probability of failures is shown against each item.

The reliability of protective scheme should at least be 95%. With proper design, installation and maintenance of the relays, circuit breakers, trip mechanisms, ac and dc wiring, etc. a very high degree of reliability can be achieved.

The back-up relays are made independent of those factors which might cause primary relays to fail. A back-up relay operates after a time delay to give the primary relay sufficient time to operate. When a back-up relay operates, a larger part of the power system is disconnected from the power source, but this is unavoidable. As far as possible, a back-up relay should be placed at a different station. Sometimes, a local back-up is also used. It should be located in such a way that it does not employ components (VT, CT, measuring unit, etc.) common with the primary relays which are to be backed up. There are three types of back-up relays:

(i) Remote back-up
(ii) Relay back-up
(iii) Breaker back-up

Table 1.3 Percentage failure rate of various equipment

Name of Equipment	*% of Total Failures*
Relays	44
Circuit breaker interrupters	14
AC wiring	12
Breaker trip mechanisms	8
Current transformers	7
DC wiring	5
VT	3
Breaker auxiliary switches	3
Breaker tripcoils	3
DC supply	1

1.8.1 Remote Back-up

When back-up relays are located at a neighbouring station, they back-up the entire primary protective scheme which includes the relay, circuit breaker, VT, CT and other elements, in case of a failure of the primary protective scheme. It is the cheapest and

the simplest form of back-up protection and is a widely used back-up protection for transmission lines. It is most desirable because of the fact that it will not fail due to the factors causing the failure of the primary protection.

1.8.2 Relay Back-up

This is a kind of a local back-up in which an additional relay is provided for back-up protection. It trips the same circuit breaker if the primary relay fails and this operation takes place without delay. Though such a back-up is costly, it can be recommended where a remote back-up is not possible. For back-up relays, principles of operation that are different from those of the primary protection as desirable. They should be supplied from separate current and potential transformers.

1.8.3 Breaker Back-up

This is also a kind of a local back-up. This type of a back-up is necessary for a bus bar system where a number of circuit breakers are connected to it. When a protective relay operates in response to a fault but the circuit breaker fails to trip, the fault is treated as a bus bar fault. In such a situation, it becomes necessary that all other circuit breakers on that bus bar should trip. After a time-delay, the main relay closes the contact of a back-up relay which trips all other circuit breakers on the bus if the proper breaker does not trip within a specified time after its trip coil is energised.

1.9 ESSENTIAL QUALITIES OF PROTECTION

The basic requirements of a protective system are as follows:

(i) Selectivity or discrimination
(ii) Reliability
(iii) Sensitivity
(iv) Stability
(v) Fast operation

1.9.1 Selectivity or Discrimination

Selectivity, is the quality of protective relay by which it is able to discriminate between a fault in the protected section and the normal condition. Also, it should be able to distinguish whether a fault lies within its zone of protection or outside the zone. Sometimes, this quality of the relay is also called discrimination. When a fault occurs on a power system, only the faulty part of the system should be isolated. No healthy part of the system should be deprived of electric supply and hence should be left intact. The relay should also be able to discriminate between a fault and transient conditions like power surges or inrush of a transformer's magnetising current. The magnetising current of a large transformer is comparable to a fault current, which may be 5 to 7 times the full load current. When generators of two interconnected power plants lose synchronism because of disturbances, heavy currents flow through the equipment and lines. This condition is like a short circuit. The flow of heavy currents is known as a power surge. The protective relay should be able to distinguish between a fault or power surge either by its inherent characteristic or with the help of

Copyrighted material

an auxiliary relay. Thus, we see that a protective relay must be able to discriminate between those conditions for which instantaneous tripping is required and those for which no operation or a time-delay operation is required.

1.9.2 Reliability

A protective system must operate reliably when a fault occurs in its zone of protection. The failure of a protective system may be due to the failure of any one or more elements of the protective system. Its important elements are the protective relay, circuit breaker, VT, CT, wiring, battery, etc. To achieve a high degree of reliability, greater attention should be given to the design, installation, maintenance and testing of the various elements of the protective system. Robustness and simplicity of the relaying equipment also contribute to reliability. The contact pressure, the contact material of the relay, and the prevention of contact contamination are also very important from the reliability point of view. A typical value of reliability of a protective scheme is 95%.

1.9.3 Sensitivity

A protective relay should operate when the magnitude of the current exceeds the preset value. This value is called the pick-up current. The relay should not operate when the current is below its pick-up value. A relay should be sufficiently sensitive to operate when the operating current just exceeds its pick-up value.

1.9.4 Stability

A protective system should remain stable even when a large current is flowing through its protective zone due to an external fault, which does not lie in its zone. The concerned circuit breaker is supposed to clear the fault. But the protective system will not wait indefinitely if the protective scheme of the zone in which fault has occurred fails to operate. After a preset delay the relay will operate to trip the circuit breaker.

1.9.5 Fast Operation

A protective system should be fast enough to isolate the faulty element of the system as quickly as possible to minimise damage to the equipment and to maintain the system stability. For a modern power system, the stability criterion is very important and hence, the operating time of the protective system should not exceed the critical clearing time to avoid the loss of synchronism. Other points under consideration for quick operation are protection of the equipment from burning due to heavy fault currents, interruption of supply to consumers and the fall in system voltage which may result in the loss of industrial loads. The operating time of a protective relay is usually one cycle. Half-cycle relays are also available. For distribution systems the operating time may be more than one cycle.

1.10 PERFORMANCE OF PROTECTIVE RELAYS

When a fault occurs in a particular zone of the power system, the primary relays of that zone are expected to operate and initiate isolation of the faulty element. However, back-up relays surrounding that area are also alerted by the fault and

Copyrighted material

begin to operate. They do not initiate tripping if the primary relays operate correctly. Information regarding operation of these back-up relays is not available when they do not trip. The back-up relay operates, if due to any reason the primary relay fails to operate. Though several primary relays are employed in many protection systems, but frequently only one of the relays actually initiates tripping of the circuit breaker. There may be no direct evidence regarding the other relays being in a correct operating mode.

The performance of the protective relay is documented by those relays that provide direct or specific evidence of operation. Relay performance is generally classified as

(i) Correct operation
(ii) Incorrect operation
(iv) No conclusion

1.10.1 Correct Operation

Correct operation of the relay can be either wanted or unwanted. The correct operation gives indication about (i) correct operation of atleast one of the primary relays, (ii) operation of none of the back-up relays to trip for the fault, and (iii) proper isolation of the trouble area in the expected time.

Almost all relay operations are corrected and wanted, i.e., the operation is as per plan and programme. There are the few cases of the correct but unwanted operation. If all relays and associated equipment perform correctly when their operation is not desired or anticipated, it is called "correct but unwanted operation."

1.10.2 Incorrect Operation

A failure, a malfunction, or an unplanned or unanticipated operation of the protective system results in incorrect operation of the relay. The incorrect operation of the relay can cause either incorrect isolation of an unfaulted area, or a failure to isolate a faulted area. The reasons for incorrect operation can be any one or a combination of (i) misapplication of relays, (ii) incorrect settings, (iii) personnel errors, and (iv) equipment malfunctions. Equipment that can cause an incorrect operation includes CTs, VTs, relays, breakers, cable and wiring, pilot channels, station batteries, etc.

1.10.3 No Conclusion

When one or more relays have or appear to have operated, such as the tripping of the circuit breaker, but no cause of operation can be found, it is the case of 'no conclusion'. Neither any evidence of a power system fault or trouble, nor apparent failure of the equipment, causes and extremely frustrating situation. Thus the cases of no conclusion involves considerable concern and thorough investigation. It is suspected that many of the cases of 'no conclusion' may be the result of personnel involvement which is not reported. Modern oscillographs and data-recording equipment which are being used nowaday in many power systems often provide direct evidence or clues regarding the problem, as well as indicating possibilities that could not have occurred.

Copyrighted material

1.11 CLASSIFICATION OF PROTECTIVE RELAYS

Protective relays can be classified in various ways depending on the technology used for their construction, their speed of operation, their generation of development, function, etc., and will be discussed in more details in the following chapters.

1.11.1 Classification of Protective Relays Based on Technology

Protective relays can be broadly classified into the following three categories, depending on the technology they use for their construction and operation.

(i) Electromechanical relays
(ii) Static relays
(iii) Numerical relays

Electromechanical Relays

Electromechanical relays are further classified into two categories, i.e., (i) electromagnetic relays, and (ii) thermal relays. *Electromagnetic relays* work on the principle of either electromagnetic attraction or electromagnetic induction. *Thermal relays* utilise the electrothermal effect of the actuating current for their operation.

First of all, electromagnetic relays working on the principle of electromagnetic attraction were developed. These relays were called attracted armature-type electromagnetic relays. This type of relay operates through an armature which is attracted to an electromagnet or through a plunger drawn into a solenoid. Plunger type electromagnetic relays are used for instantaneous units for detecting over current or overvoltage conditions.

Attracted armature-type electromagnetic relays are the simplest type which respond to ac as well as dc. Initially attracted armature-type relays were called electromagnetic relays. Later on, induction type electromagnetic relays were developed. These relays use electromagnetic induction principle for their operation, and hence work with ac quantities only. Electromagnetic relays contain an electromagnet (or a permanent magnet) and a moving part. When the actuating quantity exceeds a certain predetermined value, an operating torque is developed which is applied on the moving part. This causes the moving part to travel and to finally close a contact to energise the trip coil of the circuit breaker.

Since both attracted armature and induction type electromagnetic relays operate by mechanical forces generated on moving parts due to electromagnetic forces created by the input quantities, these relays were called electromechanical relays. The term 'electromechanical relays' has been used to designate all the electromagnetic relays which use either electromagnetic attraction or electromagnetic induction principle for their operation and thermal relays which operate as a result of electrothermic forces created by the input quantities. Sometimes both the terms, i.e., electromagnetic relays and electromechanical relays are used in parallel.

Static Relays

Static relays contain electronic circuitry which may include transistors, ICs, diodes and other electronic components. There is a comparator circuit in the relay, which compares two or more currents or voltages and gives an output which is applied to

Copyrighted material

either a slave relay or a thyristor circuit. The slave relay is an electromagnetic relay which finally closes the contact. A static relay containing a slave relay is a semi-static relay. A relay using a thyristor circuit is a wholly static relay. Static relays possess the advantages of having low burden on the CT and VT, fast operation, absence of mechanical inertia and contact trouble, long life and less maintenance. Static relays have proved to be superior to electromechanical relays and they are being used for the protection of important lines, power stations and sub-stations. Yet they have not completely replaced electromechanical relays. Static relays are treated as an addition to the family of relays. Electromechanical relays continue to be in use because of their simplicity and low cost. Their maintenance can be done by less qualified personnel, whereas the maintenance and repair of static relays requires personnel trained in solid state devices.

Numerical Relays

Numerical relays are the latest development in this area. These relays acquire the sequential samples of the ac quantities in numeric (digital) data form through the data acquisition system, and process the data numerically using an algorithm to calculate the fault discriminants and make trip decisions. Numerical relays have been developed because of tremendous advancement in VLSI and computer hardware technology. They are based on numerical (digital) devices, e.g., microprocessors, microcontrollers, Digital Signal Processors (DSPs), etc. At present microprocessor/microcontroller-based numerical relays are widely used. These relays use different relaying algorithms to process the acquired information. Microprocessor/microcontroller-based relays are called numerical relays specifically if they calculate the algorithm numerically. The term 'digital relay' was originally used to designate a previous-generation relay with analog measurement circuits and digital coincidence time measurement (angle measurement) using microprocessors. Now a days the term 'numerical relay' is widely used in place of 'digital relay'. Sometimes, both terms are used in parallel. Similarly, the term 'numerical protection' is widely used in place of 'digital protection'. Sometimes both these terms are also used in parallel.

The present downward trend in the cost of Very Large Scale Integrated (VLSI) circuits has encouraged wide application of numerical relays for the protection of modern complex power networks. Economical, powerful and sophisticated numerical devices (e.g., microprocessors, microcontrollers, DSPs, etc) are available today because of tremendous advancement in computer hardware technology. Various efficient and fast relaying algorithms which form a part of the software and are used to process the acquired information are also available today. Hence, there is a growing trend to develop and use numerical relays for the protection of various components of the modern complex power system. Numerical relaying has become a viable alternative to the traditional relaying systems employing electromechanical and static relays. Intelligent numerical relays using artificial Intelligence techniques such as Artificial Neural Networks (ANNs) and Fuzzy Logic Systems are presently under active research and development stage.

The main features of numerical relays are their economy, compactness, flexibility reliability, self-monitoring and self-checking capability, multiple functions, low burden on instruments transformers and improved performance over conventional relays of electromechanical and static types.

Copyrighted material

1.11.2 Classification of Protective Relays Based on Speed of Operation

Protective relays can be generally classified by their speed of operation as follows:

(i) Instantaneous relays
(ii) Time-delay relays
(iii) High-speed relays
(iv) Ultra high-speed relays

Instantaneous Relays

In these relays, no intentional time delay is introduced to slow down their response. These relays operate as soon as a secure decision is made.

Time-delay Relays

In these relays, an intentional time delay is introduced between the relay decision time and the initiation of the trip action.

High-speed Relays

These relays operate in less than a specified time. The specified time in present practice is 60 milliseconds (3 cycles on a 50 Hz system).

Ultra High-speed Relays

Though this term is not included in the relay standard but these relays are commonly considered to operate within 5 milliseconds.

1.11.3 Classification of Protective Relays Based on their Generation of Development

Relays can be classified into the following categories, depending on generation of their development.

(i) *First-generation relays:* Electromechanical relays
(ii) *Second-generation relays:* Static relays
(iii) *Third-generation relays:* Numerical relays.

1.11.4 Classification of Protective Relays Based on their Function

Protective relays can be classified into the following categories, depending on the duty they are required to perform:

(i) Overcurrent relays
(ii) Undervoltage relays
(iii) Impedance relays
(iv) Underfrequency relays
(v) Directional relays

These are some important relays. Many other relays specifying their duty they perform can be put under this type of classification. The duty which a relay performs is evident from its name. For example, an overcurrent relay operates when the current exceeds a certain limit, an impedance relay measures the line impedance between the relay location and the point of fault and operates if the point of fault lies within the protected section. Directional relays check whether the point of fault lies in the forward or reverse direction.

The above relays may be electromechanical, static or numerical.

Copyrighted material

1.11.5 Classification of Protective Relays as Comparators

Protective relays are basically comparators which must be able to carry out addition, subtraction, multiplication or division of some scalar or some phasor quantities and make comparisons of the input quantities as desired. Based upon this principle, the protective relays can be classified as comparators into the following categories.

(i) Single-input comparator
(ii) Dual-input comparator
(iii) Multi-input comparator

Single-input Comparator

These relays have only one input signal and are also known as *level detectors*. Such relays continuously monitor one electrical quantity and compare it with certain constant quantity, i.e., a reference or a base quantity which may be the pull of a spring or gravitational force. An example of this type of relay is an over current relay which measures the current of a circuit and compares it with a certain preset value of the reference or base quantities. Though these relays are simple in construction and operation, they have several drawbacks such as (i) they are non-directional, (ii) they are not reliable because their action depends upon a single quantity, and (iii) they fail to attain the desired reliability.

Dual-input Comparator

These relays have two input signals. Such relays measure one quantity and compare it with another quantity. The typical examples of such type of relays are distance relays and differential relays. The distance relay measures the current entering the circuit and compares it in magnitude or in phase angle with the local bus voltage. The differential relay measures the current entering the circuit and compares it with the current leaving the circuit at the other end. Dual-input comparators are of two types, i.e., amplitude comparator and phase comparator. The amplitude comparator compares only the amplitude of the two input signals irrespective of phase angle between them, whereas the phase comparator compares only the phase angle between the two input signals irrespective of their magnitudes. There is duality between amplitude and phase comparators, i.e., an amplitude comparator can be converted to a phase comparator and vice-versa if the input quantities to the comparator are modified. The modified input quantities are the sum and difference of the original two input quantities. These relays have several advantages and wide applications.

Multi-input Comparator

Multi-input comparators have more than two input signals and are used for the relaisation of special characteristics other than straight lines or circle. These comparators are also of two types, i.e., (i) multi-input phase comparator, and (ii) multi-input amplitude comparator. Multi-input phase comparator is used for realisation of quadrilateral characteristic whereas multi-input amplitude comparator is used for realisation of conic characteristics such as elliptical or hyperbolic characteristics.

Copyrighted material

1.12 COMPONENTS OF A PROTECTION SYSTEM

A protection system consists of many other subsystems which contribute to the detection and removal of faults. As shown in Fig. 1.2, the main subsystems of the protection system are the transducers, relays, circuit breakers and trip circuit containing trip coil and battery.

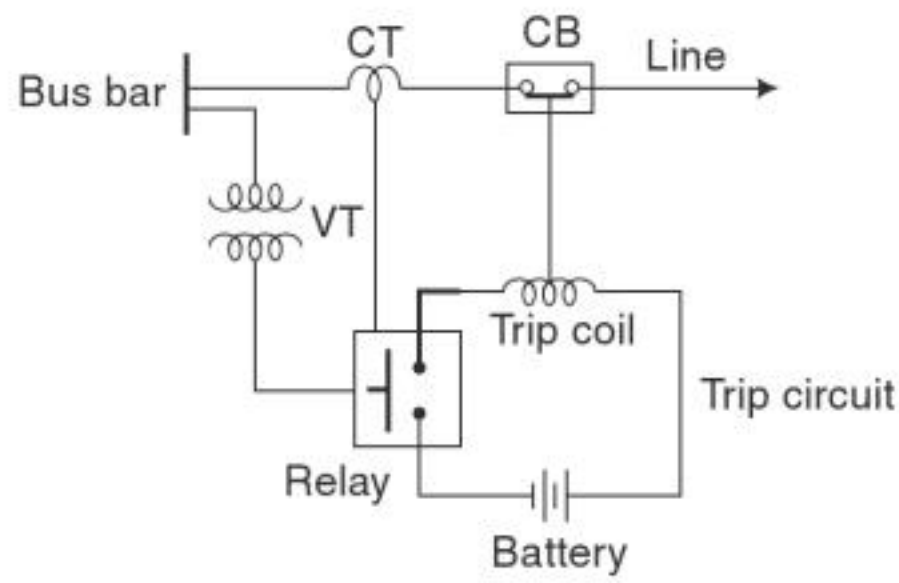

Fig. 1.2 *Components of aprotection system*

The transducers, i.e., the current and voltage transformers (CTs and VTs) are used to reduce currents and voltages to standard lower values and to isolate protective relays from the high voltages of the power system. They constitute a major component of the protection system, and are discussed in detail in Chapter 3. Protective relays detect and locate the fault and issue a command to the circuit breaker (CB) to disconnect the faulty element. When a fault occurs in the protected circuit (i.e., the line in this case), the relay connected to the CT and VT actuates and closes its contacts to complete the trip circuit. Current flows from the battery in the trip circuit. As the trip coil of the circuit breaker is energized, the circuit breaker operating mechanism is actuated and it operates for the opening operation to disconnect the faulty element.

A circuit breaker is a mechanical switching device capable of making, carrying and breaking currents under normal circuit conditions and also making, carrying for a specified time, and automatically breaking currents under specified abnormal circuit condition such as those of short circuits, i.e., faults. It is used to isolate the faulty part of the power system under abnormal conditions. A protective relay detects abnormal conditions and sends a tripping signal to the circuit breaker. A circuit breaker has two contacts—a fixed contact and a moving contact. Under normal conditions, these two contacts remain in closed position. When the circuit breaker is required to isolate the faulty part, the moving contact moves to interrupt the circuit. On the separation of the contacts, the flow of current is interrupted, resulting in the formation of an arc between the contacts. The medium in which circuit interruption is performed is designated by a suitable prefix, such as oil circuit breaker, air-break circuit breaker, air blast circuit breaker, sulphure hexafluoride circuit breaker, vacuum circuit breaker.

Since the primary function of a protection system is to remove a fault, the ability to trip a circuit breaker through a relay must not be compromised during a fault, when the ac voltage available at the substation may not be of sufficient magnitude. In case of a close-in three-phase fault, the ac voltage at the substation can be zero. Therefore the tripping power, as well as the power required by the relays cannot be obtained from the ac system, and is usually provided by the station battery. The battery which is permanently connected through a charger to the station ac service floats on the charger during normal steady-state conditions. The charger is of a sufficient VA capacity to provide all steady-state loads powered by the battery. The battery should also be rated to maintain adequate dc power for 8-12 hours following a station blackout. For better reliability EHV stations have duplicate batteries, each

feeding from its charger, and connected to its own complement of relays. Since the severe transients produced by the electromechanical relays on the battery loads during their operation may cause maloperation of other sensitive relays in the substation, or may even damage them, it is common practice, as far as practicable, to separate electromechanical and static equipment by connecting them to different batteries.

1.13 CLASSIFICATION OF PROTECTIVE SCHEMES

A protective scheme is used to protect an equipment or a section of the line. It includes one or more relays of the same or different types. The following are the most common protective schemes which are usually used for the protection of a modern power system.

(i) Overcurrent protection
(ii) Distance protection
(iii) Carrier-current protection
(iv) Differential protection

1.13.1 Overcurrent Protection

This scheme of protection is used for the protection of distribution lines, large motors, equipment, etc. It includes one or more overcurrent relays. An overcurrent relay operates when the current exceeds its pick-up value.

1.13.2 Distance Protection

Distance protection is used for the protection of transmission or sub-transmission lines; usually 33 kV, 66 kV and 132 kV lines. It includes a number of distance relays of the same or different types. A distance relay measures the distance between the relay location and the point of fault in terms of impedance, reactance, etc. The relay operates if the point of fault lies within the protected section of the line. There are various kinds of distance relays. The important types are impedance, reactance and mho type. An impedance relay measure the line impedance between the fault point and relay location; a reactance relay measures reactance, and a mho relay measures a component of admittance.

1.13.3 Carrier-Current Protection

This scheme of protection is used for the protection of EHV and UHV lines, generally 132 kV and above. A carrier signal in the range of 50-500 kc/s is generated for the purpose. A transmitter and receiver are installed at each end of a transmission line to be protected. Information regarding the direction of the fault current is transmitted from one end of the line section to the other. Depending on the information, relays placed at each end trip if the fault lies within their protected section. Relays do not trip in case of external faults. The relays are of distance type and their tripping operation is controlled by the carrier signal.

1.13.4 Differential Protection

This scheme of protection is used for the protection of generators, transformers, motors of very large size, bus zones, etc. CTs are placed on both sides of each

Copyrighted material

winding of a machine. The outputs of their secondaries are applied to the relay coils. The relay compares the current entering a machine winding and leaving the same. Under normal conditions or during any external fault, the current entering the winding is equal to the current leaving the winding. But in the case of an internal fault on the winding, these are not equal. This difference in the current actuates the relay. Thus, the relay operates for internal faults and remains inoperative under normal conditions or during external faults. In case of bus zone protection, CTs are placed on the both sides of the bus bar.

1.14 AUTOMATIC RECLOSING

About 90% of faults on overhead lines are of transient nature. Transient faults are caused by lightning or external bodies falling on the lines. Such faults are always associated with arcs. If the line is disconnected from the system for a short time, the arc is extinguished and the fault disappears. Immediately after this, the circuit breaker can be reclosed automatically to restore the supply.

Most faults on EHV lines are caused by lightning. Flashover across insulators takes place due to overvoltages caused by lightning and exists for a short time. Hence, only on instantaneous reclosure is used in the case of EHV lines. There is no need for more than one reclosure for such a situation. For EHV lines, one reclosure in 12 cycles is recommended. A fast reclosure is desired from the stability point of view. More details have been given in Ch. 6.

On lines up 33 kV, most faults are caused by external objects such as tree branches, etc. falling on the overhead lines. This is due to the fact that the support height is less than that of the trees. The external objects may not be burnt clear at the first reclosure and may require additional reclosures. Usually three reclosures at 15-120 seconds' intervals are made to clear the fault. Statistical reports show that over 80% faults are cleared after the first reclosure, 10% require the second reclosure and 2% need the third reclosure, while the remaining 8% are permanent faults. If the fault is not cleared after 3 reclosures, it indicates that the fault is of permanent nature. Automatic reclosure are not used on cables as the breakdown of insulation in cables causes a permanent fault.

1.15 CURRENT TRANSFORMERS (CTs) FOR PROTECTION

Current transformers (CTs) are used to obtain reduced current signals from the power systems for the purpose of measurement, control and protection. They reduce the heavy currents of the power system to lower values that are suitable for the operation of relays and other instruments connected to their secondary windings. Besides reducing the current levels, CTs also isolate the relays and instruments circuits from the primary circuit which is a high voltage power circuit and allow the use of standardized current ratings for relays and meters. The current ratings of the secondary windings of the CTs have been standardized so that a degree of interchangeability among relays and meters of different manufacturers can be achieved. Since the standard current ratings of the secondary windings of the CTs are 5 or 1 ampere

Copyrighted material

the protective relays also have the same current rating. The current transformers are designed to withstand fault currents (which may be as high as 50 times the full load current) for a few seconds. Protective relays require reasonably accurate reproduction of the normal and abnormal conditions in the power system for correct sensing and operation. Hence the current transformers should be able to provide current signals to the relays which are faithful reproductions of the primary currents. The measure of a current transformer performance is its ability to accurately reproduce the primary current in secondary.

The requirements of CTs used for relaying are quite different from those of metering (CTs for measuring instruments). CTs used for instrumentation are required to be accurate over the normal working range of currents, whereas CTs used for relaying are required to give a correct ratio up to several times the rated primary current. The CTs used for metering may have very significant errors during fault conditions, when the currents may be several times their normal value for a very short time. Since metering functions are not required during faults, this is not significant. CTs used for relaying are designed to have small errors during fault conditions, whereas their performance during normal steady state condition, when the relay is not required to operate, may not be as accurate.

The accuracy of a current transformer is expressed in terms of the departure of its ratio form its true ratio. This is called the ratio error, and is expressed as:

$$\text{Percent error} = \left[\frac{NI_s - I_p}{I_p}\right] \times 100$$

where, N = Nominal CT ratio

$$= \frac{\text{Rated primary current}}{\text{Rated secondary current}}$$

$$= \frac{\text{Number of secondary turns}}{\text{Number of primary turns}}$$

I_s = Secondary current, and

I_p = Primary current

The ratio error of a CT depends on its exciting current.

Current transformers are of electromagnetic, opto-electronic and Rogowski coil types. The electromagnetic type CTs which are magnetically coupled, multi-winding transformers can be classified into two categories: toroidal or bar primary CTs and wound primary CTs. Toroidal or bar-primary-type CTs, donot contain a primary winding and instead a straight conductor, (wire) which is a part of the power system and carries the current, acts as the primary. The conductor (wire) that carries the currents is encircled by a ring-type iron core on which the secondary winding is wound over the entire periphery. Wound-type CTs consist of a primary winding of fewer turns wound on the iron core and inserted in series with the conductor that carries the measured-current.

An opto-electronic or optical CT uses two light beams travelling through an optical fiber to measure the magnetic field around a current-carrying conductor, which

Copyrighted material

gives a measure of the current flowing in the conductor. The phase displacement between the two beams is proportional to the level of current in the conductor.

The Rogowski Coil (RC) is a helical coil of wire with the lead from one end returning through the centre of the coil to the other end, so that both are at the same end of the coil. The whole assembly is then wrapped around the straight conductor whose current is to be measured. Since the voltage that is induced in the coil is proportional to the rate of change (derivative) of current in the conductor, the output of the Rogowski coil is usually connected to an electrical (or electronic) integrator circuit to provide an output signal that is proportional to the current.

Current transformers are described in detail in Chapter 3.

1.16 VOLTAGE TRANSFORMERS (VTs)

Voltage transformers (VTs) were previously known as potential transformers (PTs). They are used to reduce the power system voltages to lower values and to provide isolation between the high-voltage power network and the relays and other instruments connected to their secondaries. The voltage ratings of the secondary windings of the VTs have been standardized, so that a degree of interchangeability among relays and meters of different manufacturers can be achieved. The secondary windings of the voltage transformers are rated at 110 V line to line. Therefore, the voltage ratings of the voltage (pressure) coils of protective relays and measuring instruments (meters) are also 110 V line to line. The voltage transformers should be able to provide voltage signals to the relays (and meters) which are faithful reproductions of the primary voltages.

The accuracy of voltage transformers is expressed in terms of the departure of its ratio from its true ratio.

The percentage ratio error is given by

$$\text{Percent ratio error} = \left(\frac{KV_s - V_p}{V_p}\right) \times 100$$

where, K = Nominal voltage ratio

$$= \frac{\text{Rated primary voltage}}{\text{Rated secondary voltage}}$$

$$= \frac{\text{Number of primary turns}}{\text{Number of secondary turns}}$$

V_s = Secondary voltage, and

V_p = Primary voltage

Ideally a VT should produce a secondary voltage which is exactly proportional and in phase opposition to the primary voltage. But, in practice, this cannot be achieved owing to the voltage drops in the primary and secondary windings due to magnitude and power factor of the secondary burden. Thus, ratio and phase angle errors are introduced.

Copyrighted material

There are three types of voltage transformers:

(i) electromagnetic type, (ii) capacitor type, and (iii) opto-electronic type. The electro magnetic type of VT is similar to a conventional wound type transformer with additional feature to minimise errors. This type of VT is conveniently used for voltages up to 132 KV. Capacitor-type voltage transformer has a capacitance voltage divider and is used at higher system voltages, i.e., 132 KV and above. This type of voltage transformer is also known as Coupling Capacitor Voltage Transformer (CCVT). In an opto-electronic VT, a circular polarized light beam traveling through a fibre optic up the column is used to determine the voltage difference between the conductor and the ground. This type of voltage transformer is also known as electronic voltage transformer.

The voltage transformers (VTs) are described in detail in Chapter 3.

1.17 BASIC RELAY TERMINOLOGY

Relay: A relay is an automatic device by means of which an electrical circuit is indirectly controlled (opened or closed) and is governed by a change in the same or another electrical circuit.

Protective relay: A protective relay is an automatic device which detects an abnormal condition in an electrical circuit and causes a circuit breaker to isolate the faulty element of the system. In some cases it may give an alarm or visible indication to alert operator.

Operating force or torque: A force or torque which tends to close the contacts of the relay.

Restraining force or torque: A force or torque which opposes the operating force/ torque.

Actuating quantity: An electrical quantity (current, voltage, etc) to which relay responds.

Pick-up (level): The threshold value of the actuating quantity (current, voltage, etc.) above which the relay operates.

Reset on drop-out (level): The threshold value of the actuating quantity (current, voltage, etc.) below which the relay is de-energised and returns to its normal position or state. Consider a situation where a relay has closed its contacts and the actuating current is still flowing. Now, due to some reason, the abnormal condition is over and the current starts decreasing. At some maximum value of the current the contacts will start opening. This condition is called reset or drop-out. The maximum value of the actuating quantity below which contacts are opened is called the reset or drop-out value.

Operating time: It is the time which elapses from the instant at which the actuating quantity exceeds the relays pick-up value to the instant at which the relay closes its contacts.

Reset time: It is the time which elapses from the moment the actuating quantity falls below its reset value to the instant when the relay comes back to its normal (initial) position.

Copyrighted material

Setting: The value of the actuating quantity at which the relay is set to operate.

Seal-in relay: This is a kind of an auxiliary relay. It is energised by the contacts of the main relay. Its contacts are placed in parallel with those of the main relay and is designed to relieve the contacts of the main relay from their current carrying duty. It remains in the circuit until the circuit breaker trips. The seal-in contacts are usually heavier than those of the main relay.

Reinforcing relay: This is a kind of an auxiliary relay. It is energised from the contacts of the main relay. Its contacts are placed in parallel with those of the main relay and it is also designed to relieve the main relay contacts from their current carrying duty. The difference between a reinforcing relay and a seal-in relay is that the latter is designed to remain in the circuit till the circuit breaker operates. But this is not so with the reinforcing relay. The reinforcing relay is used to hold a signal from the initiating relay (main relay) for a longer period. As the contacts of the main relay are not robust, they are closed for a short time.

Back-up relay: A back-up relay operates after a slight delay, if the main relay fails to operate.

Back-up protection: The back-up protection is designed to clear the fault if the primary protection fails. It acts as a second line of defence.

Primary protection: If a fault occurs, it is the duty of the primary protective scheme to clear the fault. It acts as a first line of defence. If it fails, the back-up protection clears the fault.

Measuring relay: It is the main protective relay of the protective scheme, to which energising quantities are applied. It performs measurements to detect abnormal conditions in the system to be protected.

Auxiliary relays: Auxiliary relays assist protective relays. They repeat the operations of protective relays, control switches, etc. They relieve the protective relays of duties like tripping, time lag, sounding and alarm, etc. They may be instantaneous or may have a time delay.

Electromagnetic relay: A relay which operates on the electromagnetic principle, i.e., an electromagnet attracts magnetic moving parts (e.g.,) plunger type moving iron type, attracted armature type). Such a relay operates principally by action of an electromagnetic element which is energized by the input quantity.

Electromachanical relay: An electrical relay in which the designed response is developed by the relative movement of mechanical elements under the action of a current in the input circuit. Such relay operates by physical movement of mechanical parts resulting from electromagnetic or electrothermic forces created by the input quantities.

Electrodynamic relay: A relay which has two or more coils and- operates due to interaction of fluxes produced by the individual coils

Ferrodynamic relay: A relay in which the electrodynamic action is reinforced by pieces of ferromagnetic material placed in the path of magnetic lines of force.

Static relays: These are solid state relays and employ semiconductor diodes, transistors, thyristors, logic gates, ICs, etc. The measuring circuit is a static circuit and there are no moving parts. In some static relays, a slave relay which is a dc potarised relay is used as the tripping device.

Copyrighted material

Analog relay: An analog relay is that in which the measured quantities are converted into lower voltage but similar signals, which are then combined or compared directly to reference values in level detectors to produce the desired output.

Digital relay: A digital relay is that in which the measured ac quantities are manipulated in analog form and subsequently converted into either square-wave voltages or digital form. Logic circuits or microprocessors compare either the phase relationships of the square waves or the magnitudes of the quantities in digital form to make a trip decision.

Numerical relay: A numerical relay is that in which the measured ac quantities are sequentially sampled and converted into numerical (digital) data form. A microprocessor or a microcontroller processes the data numerically (i.e., performs mathematical and/or logical operations on the data) using an algorithm to calculate the fault discriminants and make trip decisions.

Microprocessor-based relay: A microprocessor is used to perform all functions of a relay. It measures electrical quantities, makes comparisons, performs computations, and sends tripping signals. It can realise all sorts of relaying characteristics, even irregular curves which cannot be reslised by electromechanical or static relays easily.

Microcontroller-based relay: A microcontroller is used for performing all the function of the relay. It measures the electrical quantities by acquiring them in digital form through a data acquisition system, makes comparisons, processes the digital data to calculate the fault discriminants and make trip decisions. It can realise all sorts of relaying characteristics.

DSP-based relay: A Digital Signal Processor (DSP) is used to perform all the functions of a relay.

FPGA-based relay: A Field Programmable Gate Array (FPGA) is used to perform all the functions of a relay. It acquires the signals, processes them to calculate the fault discriminants and make trip decisions.

ANN-based relay: An Artificial Neural Network (ANN) is used for processing the relaying signals (current and voltage signals) and making trip decisions.

Overcurrent relay: A relay which operates when the actuating current exceeds a certain preset value (its pick-up value).

Undervoltage relay: A relay which operates when the system voltage falls below a certain preset value.

Directional or reverse power relay: A directional relay is able to detect whether the point of fault lies in the forward or reverse direction with respect to the relay location. It is able to sense the direction of power flow, i.e. whether the power is flowing in the normal direction or the reverse direction.

Polarised relay: A relay whose operation depends on the direction of current or voltage.

Flag or target: Flag is a device which gives visual indication whether a relay has operated or not.

Time-lag relay: A time-lag relay operates after a certain preset time lag. The time lag may be due to its inherent design feature or may be due to the presence of a time-

delay component. Such relays are used in protection schemes as a means of time discrimination. They are frequently used in control and alarm schemes.

Instantaneous relay: An instantaneous relay has no intentional time delay in its operation. It operates in 0.1 second. Sometimes the terms high set or high speed relays are also used for the relays which have operating times less than 0.1 second.

Inverse time relay: A relay in which the operating time is inversely proportional to the magnitude of the operating current.

Definite time relay: A relay in which the operating time is independent of the magnitude of the actuating current.

Inverse Definite Minimum Time (IDMT) Relay: A relay which gives an inverse time characteristic at lower values of the operating current and definite time characteristic at higher values of the operating current.

Induction relay: A relay which operates on the principle of induction. Examples are induction disc relays, induction cup relays etc.

Moving coil relay: This type of a relay has a permanent magnet and a moving coil. It is also called a permanent magnet d.c. moving coil relay. The actuating current flows in the moving coil.

Moving iron relay: This is a dc polarised, moving iron type relay. There is an electromagnet, permanent magnet and a moving armature in its construction.

Printed disc relay: This relay operates on the principle of a dynamometer. There is a permanent magnet or an electromagnet and a printed disc. Direct current is fed to the printed circuit of the disc.

Thermal relay: This relay utilises the electrothermal effect of the actuating current for its operation.

Distance relay: A relay which measures impedance or a component of the impedance at the relay location is known as a distance relay. It is used for the protection of a transmission line. As the impedance of a line is proportional to the length of the line, a relay which measures impedance or its component is called a distance relay.

Impedance relay: A relay which measures impedance at the relay location is called an impedance relay. It is a kind of a distance relay.

Modified impedance relay: It is an impedance relay having shifted characteristics. The voltage coil includes some current biasing.

Reactance relay: A relay which measures reactance at the relay location is called a reactance relay. It is a kind of a distance relay.

MHO relay (admittance or angle admittance): This is a kind of a distance relay. It measures a particular component of the impedance, i.e. $\frac{Z}{\cos(\phi - \theta)}$, where ϕ is the power factor angle and θ is the design angle to shift MHO characteristic on the R-X diagram. Its characteristic on the R-X diagram is a circle passing through the origin. It is a directional relay. It is also known as an admittance or angle admittance relay.

Conduction relay: This is a MHO relay whose diameter (passing through the origin) lies on the R-axis.

Copyrighted material

Offset MHO characteristic: In an offset MHO relay, the MHO characteristic is shifted on the R-X diagram to include the origin.

Angle impedance relay (ohm relay): The characteristic of this relay on the R-X diagram is a straight line passing at an angle and cutting both the axes. It is a kind of a distance relay and is also called an Ohm relay.

Elliptical relay: The characteristic of an elliptical relay on the R-X diagram is an ellipse. This is also a kind of a distance relay.

Quadrilateral relay: The characteristic of a quadrilateral relay on the R-X diagram is a quadrilateral. This too is a kind of a distance relay.

Frequency sensitive relay: This is a relay which operates at a predetermined value of the system frequency. It may be an under-frequency relay or an over-frequency relay. An under-frequency relay operates when the system frequency falls below a certain value. An over-frequency relay will operate when the system frequency exceeds a certain preset value of the frequency.

Differential relay: A relay which operate in response to the difference of two actuating quantities.

Earth fault relay: A relay used for the protection of an element of a power system against earth faults is known as an earth fault relay.

Phase fault relay: A relay used for the protection of an element of a power system against phase faults is called a phase fault relay.

Negative sequence relay: A relay for which the actuating quantity is the negative sequence current. When the negative sequence current exceeds a certain value, the relay operates. This type of a relay is used to protect electrical machines against overheating due to unbalanced currents.

Zero sequence relay: A relay for which the actuating quantity is the zero sequence current. This type of a relay is used for earth fault protection.

Starting relay or fault detector: This is a relay which detects abnormal conditions and initiates the operation of other elements of the protective scheme.

Notching relay: A relay which switches in response to a specific number of applied impulses is called a notching relay.

Regulating relay: A regulating relay is activated when an operating parameter deviates from predetermined limits. This relay functions through supplementary equipment to restore the quantity to the prescribed limits.

Monitoring relay: A monitoring relay verifies conditions on the power system or in the protection system. This relay includes fault detectors, alarm units, channel-monitoring relays, synchronism verification, and network phasing. Power system conditions that do not involve opening circuit breakers during faults can be monitored by monitoring (verification) relays.

Synchronizing (or synchronism check) relay: This relay assures that proper conditions exist for interconnecting two sections of power system.

Biased relay: A relay in which the characteristics are modified by the introduction of some quantity other than the actuating quantity, and which is usually in opposition to the actuating quantity. The setting of this relay is modified by additional windings the amount of bias being dependent upon conditions in the protected circuit.

Copyrighted material

Primary relay: A relay which is directly connected to the protected circuit without interposing instrument transformers or shunt.

Secondary relay: A relay connected to the protected circuit through current and voltage transformers.

Sequential relay: A relay which instantaneously transfers its contact position from a particular combination of 'off' and 'on' position to another combination, every time it picks up or drops off, according to a predetermined programme which may or may not be adjustable and repetitive

Indicating relay: A measuring or auxiliary relay which displays a signal on energisation

Reclosing relay: This relay establishes a closing sequence for a circuit breaker following tripping by protective relays.

Supervisory relay: A measuring relay or a combination of measuring and auxiliary relays in a unit with a definite purpose of supervision.

Change over relay: An auxiliary relay with two positions either of which cannot be designated as 'on' and 'off' but which transfers the contact circuits from one connection to the other.

Two-step relay: A relay with two sets of contacts, one of them operates at a certain value of the characteristic quantity and the other after a further change of the quantity.

Current unbalance relay: This relay operates when the currents in a polyphase system are unbalanced by a predetermined amount.

Voltage unbalanced relay: This relay operates when the voltages in a poly phase system are unbalanced by a predetermined amount.

Ferraris relay: This relay moves by the interaction of the magnetic field of a coil and the currents induced in a metal body (disc or cup)

Protective zone: A power system is divided into a number of zones from the protection point of view. Each element of the power system has a separate protective scheme for its protection. The elements which come under a protective scheme are said to be in the zone of protection of that particular scheme. Similarly, a protective relay has its own zone of protection.

Reach: This term is mostly used in connection with distance relays. A distance relay operates when the impedance (or a component of the impedance) as seen by the relay is less than a preset value. This preset impedance (or a component of impedance) or corresponding distance is called the reach of the relay. In other words, it is the maximum length of the line up to which the relay can protect.

Overreach: Sometimes a relay may operate even when a fault point is beyond its present reach (i.e. its protected length).

Underreach: Sometimes a relay may fail to operate even when the fault point is within its reach, but it is at the far end of the protected line. This phenomenon is called underreach.

Selectivity or discrimination: It is the ability of a relay to discriminate between faulty conditions and normal conditions (or between a fault within the protected section and outside the protected section). In other words, it is the quality of the

protective system by which it distinguishes between those conditions for which it should operate and those for which it should not.

Reliability: A protective relay must operate reliably when a fault occurs. The reliability of a protective relay should be very high, a typical value being 95%.

Sensitivity: A protective relay should be sensitive enough to operate when the magnitude of the actuating quantity exceeds its pick-up value.

Stability: This is the ability of the protective system to remain inoperative under all load conditions, and also in case of external faults. The relay should remain stable when a heavy current due to an external fault is flowing through it.

Fast operation: A protective relay should be fast enough to cause the isolation of the faulty section as quickly as possible to minimise the damage and to maintain the stability.

Burden: The power consumed by the relay circuitry at the rated current is known as its burden.

Blocking: The prevention of tripping of the relay is called blocking. It may be due to the operation of an additional relay or due to its own characteristic.

Energizing quantity: The electrical quantity, i.e., either current or voltage, which alone or in combination with other electrical quantities, must be applied to the relay for its functioning.

Characteristic quantity: A quantity, the value of which characterizes the operation of the relay for example, current for an overcurrent relay, voltage for a voltage relay, phase angle for a directional relay, time for an independent time delay relay, impedance for an impedance relay, frequency for a frequency relay.

Characteristic angle: The angle between the phasors representing two of the energizing quantities applied to a relay and used for the declaration of the performance of the relay.

System Impedance Ratio (SIR): The ratio of the power system source impedance to the impedance of the protected zone.

Characteristic Impedance Ratio (CIR): The maximum value of the system impedance ratio up to which the relay performance remains within the prescribed limits of accuracy.

Power swing: Oscillation between groups of synchronous machines caused by an abrupt change in load conditions.

Through fault current: The current flowing through a protected zone to a fault beyond that zone.

Unit system of protection: A unit system of protection is one which is able to detect and respond to faults occurring only within its own zone of protection. It is said to have absolute discrimination. Its zone of protection is well defined. It does not respond to the faults occurring beyond its own zone of protection. Examples of unit protection are differential protection of alternators, transformers or bus bars, frame leakage protection, pilot wire and carrier current protection.

Non-unit system of protection: A non-unit system of protection does not have absolute discrimination (selectivity). It has dependent or relative discrimination. The discrimination is obtained by time grading, current grading or a combination of

current and time grading of the relays of several zones. In this situation, all relays may respond to a given fault. Examples of non-unit system of protection are distance protection and time graded, current graded or both time and current graded protection.

Restricted earth fault protection: This is an English term which may be misunderstood in other countries. It is used in the context of transformer or alternator. It refers to the differential protection of transformers or alternators against ground faults. It is called restricted because its zone of protection is restricted only to the winding of the alternator or transformer. The scheme responds to the faults occurring within its zone of protection. It does not respond to faults beyond its zone of protection.

Unrestricted protection: A protection system which has no clearly defined zone of operation and which achieves selective operation only by time grading.

Protective gear or equipment: It includes transducers (CTs and VTs), protective relays, circuit breakers and ancillary equipment to be used in a protective system.

Protective system: It is a combination of Protective gear equipment to secure isolation of the faulty element under predetermined conditions, usually abnormal or to give an alarm signal or both.

Protective scheme: A protective scheme may consist of several protective systems. It is designed to protect one or more elements of a power system.

Residual current: It is the algebraic sum of all currents in a multiphase system. It is denoted by I_{res}. In a 3-phase system $I_{res} = I_A + I_B + I_C$.

Transducers or instrument transformers: Current and voltage transformers (CTs and VTs) are collectively known as transducers or instrument transformers. They are used to reduce currents and voltages to standard lower values and to isolate protective relays and measuring instruments from the high voltages of the power system.

Switchgear: It is a general term covering switching and interrupting devices and their combination with associated control, metering, protective and regulating devices, also assemblies of these devices with associated inter-connections, accessories, enclosures and supporting structures used primarily in connection with generation, transmission, distribution, and conversion of electric power.

Circuit breaker: It is a mechanical switching device capable of making, carrying and breaking currents under normal circuit conditions and also making, carrying for a specified time, and automatically breaking currents under specified abnormal circuit conditions such as those of short circuit. The medium in which circuit interruption is performed may be designated by suitable prefix, such as, oil-circuit breaker, air-blast circuit breaker, air-break circuit breaker, sulphur hexafluoride circuit breaker, vacuum circuit breaker, etc.

Adaptive relaying: Adaptive relaying is defined as the protection system whose settings can be changed automatically so that it is attuned to the prevailing power system conditions.

Pilot wire: An auxiliary conductor used in connection with remote measuring devices or for operating apparatus at a distant point.

Pilot protection: A form of line protection that uses a communication channel as a means to compare electrical conditions at the terminals of a line.

Copyrighted material

Pilot wire protection: Pilot protection in which a metallic circuit is used for the communicating means between relays at the circuit terminals.

EXERCISES

1. Explain the nature and causes of faults. Discuss the consequences of faults on a power system.
2. What are the different types of faults? Which type of fault is most dangerous?
3. Discuss briefly the role of protective relays in a modern power system.
4. What do you understand by a zone of protection? Discuss various zones of protection for a modern power system.
5. Explain what you understand by primary and back-up protection. What is the role of back-up protection? What are the various methods of providing back-up protection?
6. Explain what you understand by pick-up and reset value of the actuating quantity.
7. Discuss what you understand by selectivity and stability of protective relay.
8. Discuss the essential qualities of a protective relay.
9. How is the relay performance classified? What indication the correct operation of the relay gives? What do you mean by "correct but unwanted operation"?
10. What do you understand by incorrect operation of the protective relay? What are the reasons of incorrect operation?
11. Discuss the classification of protective relays based on their speed of operation.
12. Differentiate between a digital relay and a numerical relay.
13. What is a numerical relay? Discuss its advantages over conventional relays of electromechanical and static types. How can an intelligent numerical relay be developed.
14. What are the various components of a protection system? Briefly describe their functions with the help of an schematic diagram.
15. Differentiate between a protective system and a protective scheme.
16. What do you understand by adaptive relaying? How can a relay be made adaptive?
17. Briefly describe the following types of relay.

    (i) Monitoring relay (ii) Regulating relay (iii) Auxiliary relay (iv) Synchronizing relay, and (v) Biased relay.

Copyrighted material

2 Relay Construction and Operating Principles

2.1 INTRODUCTION

The proper operation of the power system requires an efficient, reliable and fast-acting protection scheme, which basically consists of protective relays and switching devices. A protective relay, acting as a brain behind the whole system, senses the fault, locates it, and sends a command to appropriate circuit breaker to isolate only the faulty section, thus keeping the rest of the healthy system functional. It detects abnormal conditions on a power system by constantly monitoring the electrical quantities of the system, which are different under normal and abnormal (fault) conditions. The basic electrical quantities which are likely to change during abnormal conditions are current, voltage, phase angle (direction) and frequency. Protective relays utilize one or more of these quantities to detect abnormal conditions on a power system.

The basic relay circuit is illustrated in Fig. 2.1. There are two ways in which the circuit breaker trip coil is energized. In one method, the station battery is used to supply the current in the trip coil after the relay contacts are closed by the operation of the relay. In the second method, as soon as the relay operates, the CT secondary current flows through the trip coil and energizes it. This method does not require a station battery and it is used for the protection of feeders.

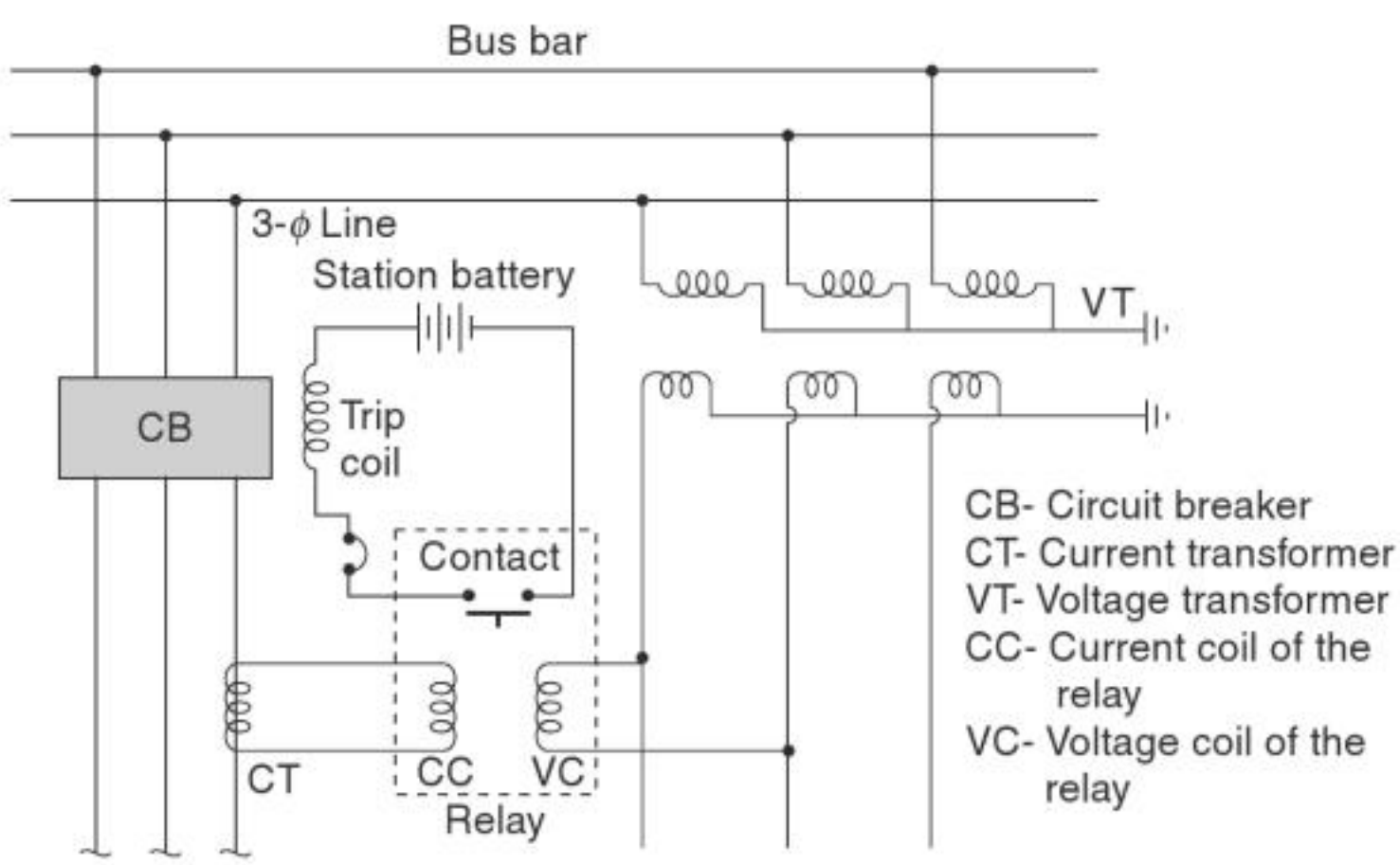

Fig. 2.1 *Relay connection*

Protective relays are broadly classified into the following three categories depending on the technologies they use for their construction and operation.

(i) Electromechanical relays

(ii) Static relays

(iii) Numerical relays

There are various types of protective relays in each category, depending on the operating principle and application.

2.2 ELECTROMECHANICAL RELAYS

Electromechanical relays operate by mechanical forces generated on moving parts due to electromagnetic or electrothermic forces created by the input quantities. The mechanical force results in physical movement of the moving part which closes the contacts of the relay for its operation. The operation of the contact arrangement is used for relaying the operated condition to the desired circuit in order to achieve the required function. Since the mechanical force is generated due to the flow of an electric current, the term 'electromechanical relay' is used.

Most electromechanical relays use either electromagnetic attraction or electromagnetic induction principle for their operation. Such relays are called *electromagnetic relays*. Depending on the principle of operation, the electromagnetic relays are of two types, i.e., (i) attracted armature relays, and (ii) induction relays. Some electromechanical relays also use electrothermic principle for their operation and are based upon the forces created by expansion of metals caused by temperature rise due to flow of current. Such relays are called *thermal relays*. Most of the present day electromechanical relays are of either induction disc type or induction cup type.

The following are the principal types of electromechanical relays:

1. Electromagnetic relays
   (i) Attracted armature relays, and
   (ii) Induction relays
2. Thermal relays

2.2.1 Attracted Armature Relays

Attracted armature relays are the simplest type which respond to ac as well as dc. These relays operate through an armature which is attracted to an electromagnet or through a plunger which is drawn into a solenoid. All these relays use the same electromagnetic attraction principle for their operation. The electromagnetic force exerted on the moving element, i.e., the armature or plunger, is proportional to the square of the flux in the air gap or the square of the current. In dc relays this force is constant. In case of ac relays, the total electromagnetic force pulsates at double the frequency. The motion of the moving element is controlled by an opposing force generally due to gravity or a spring.

The following are the different types of construction of attracted armature relays.

(i) Hinged armature type

(ii) Plunger type

Copyrighted material

(iii) Balanced beam type
(iv) Moving-coil type
(v) Polarised moving-iron type
(vi) Reed type

Hinged Armature-Type Relays

Figure 2.2(a) shows a hinged armature-type construction. The coil is energised by an operating quantity proportional to the system current or voltage. The operating quantity produces a magnetic flux which in turn produces an electromagnetic force. The electromagnetic force is proportional to the square of the flux in the air gap or the square of the current. The attractive force increases as the armature approaches the pole of the electromagnet. This type of a relay is used for the protection of small machines, equipment, etc. It is also used for auxiliary relays, such as indicating flags, slave relays, alarm relays, annunciators, semaphores, etc.

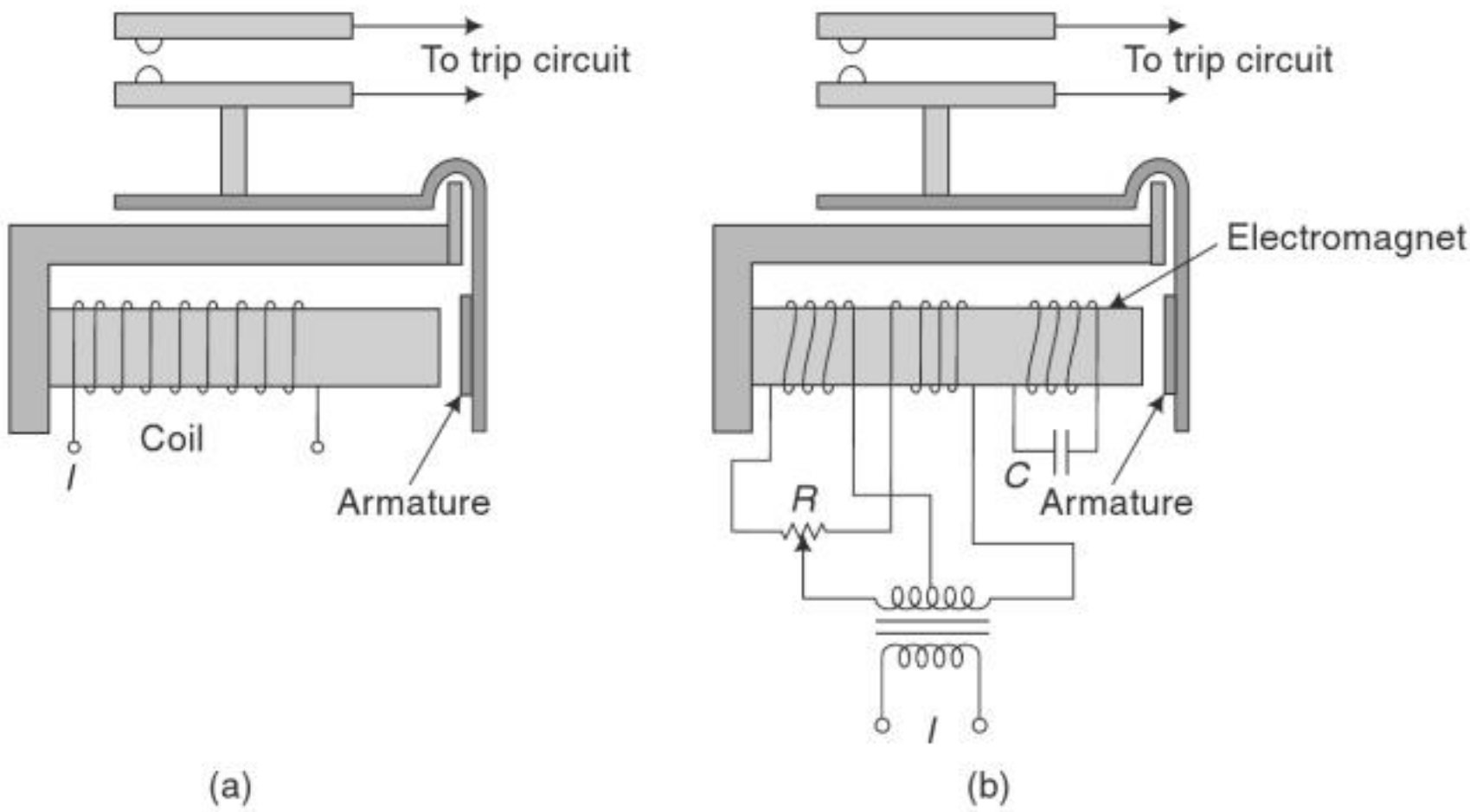

Fig. 2.2 *(a) Hinged armature-type relay (b) Modified hinged armature-type relay*

The actuating quantity of the relay may be either ac or dc. In dc relay, the electromagnetic force of attraction is constant. In the case of ac relays, sinusoidal current flows through the coil and hence the force of attraction is given by

$$F = K I^2 = K (I_{max} \sin \omega t)^2 = \frac{1}{2} K (I_{max}^2 - I_{max}^2 \cos 2\omega t)$$

From the above expression, it is evident that the electromagnetic force consists of two components. One component is constant and is equal to ½ $K I_{max}^2$. The other component is time dependent and pulsates at double the frequency of the applied ac quantity. Its magnitude is ½ $K I_{max}^2 \cos 2\omega t$. The total force is a double frequency pulsating force. This may cause the armature to vibrate at double the frequency. Consequently, the relay produces a humming sound and becomes noisy. This difficulty can be overcome by making the pole of the electromagnet of shaded construction. Alternatively, the electromagnet may be provided with two coils. One coil is energised with the actuating quantity. The other coil gets its supply through a phase shifting circuit.

Copyrighted material

The restraining force is provided by a spring. The reset to pick-up ratio for attracted armature type relays is 0.5 to 0.9. For this type of a relay, the ratio for ac relays is higher as compared to dc relays. The VA burden is low, which is 0.08 W at pick-up for the relay with one contact, 0.2 W for the relay with four contacts. The relay is an instantaneous relay. The operating speed is very high. For a modern relay, the operation time is about 5 ms. It is faster than the induction disc and cup type relays. Attracted armature relays are compact, robust and reliable. They are affected by transients as they are fast and operate on both dc and ac. The fault current contains a dc component in the beginning for a few cycles. Due to the presence of dc transient, the relay may operate though the steady state value of the fault current may be less than its pick-up. A modified construction as shown in Fig. 2.2(b) reduces the effect of dc transients.

Plunger-Type Relays

Figure 2.3 shows a plunger-type relay. In this type of a relay, there is a solenoid and an iron plunger which moves in and out of the solenoid to make and break the contact. The movement of the plunger is controlled by a spring. This type of construction has however become obsolete as it draws more current.

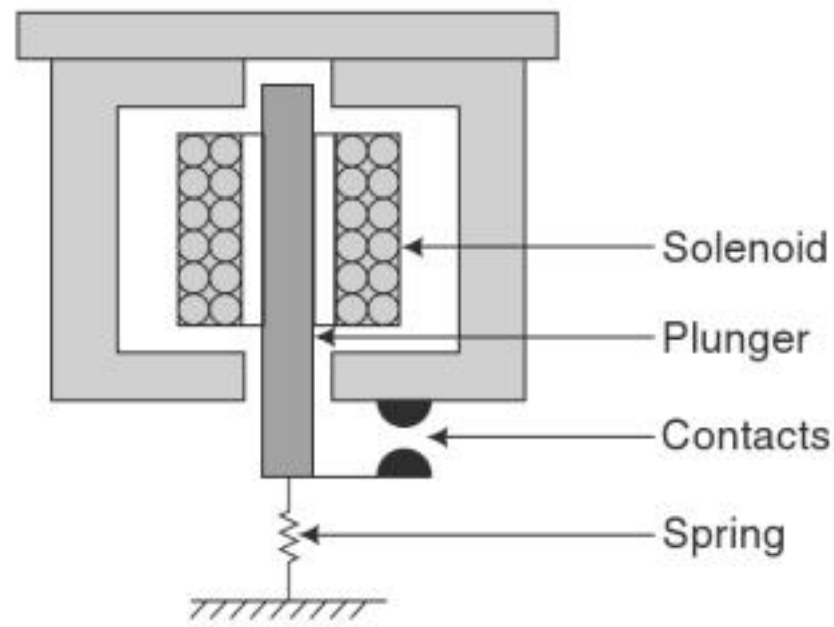

Fig. 2.3 *Plunger-type relay*

Balanced Beam Relays

Figure 2.4 shows a balanced beam relay which is also a kind of attracted armature type relay. As its name indicates, it consists of a beam carrying two electromagnets at its ends. One gives operating torque while the other retraining torque. The beam is supported at the middle and it remains horizontal under normal conditions. When the operating torque exceeds the restraining torque, an armature fitted at one end of the beam is pulled and its contacts are closed. Though now obsolete, this type of a relay was popular in the past for constructing impedance and differential relays. It has been superseded by rectifier bridge comparators and permanent magnet moving coil relays. The beam type relay is robust and fast in operation, usually requiring only 1 cycle, but is not accurate as it is affected by dc transients.

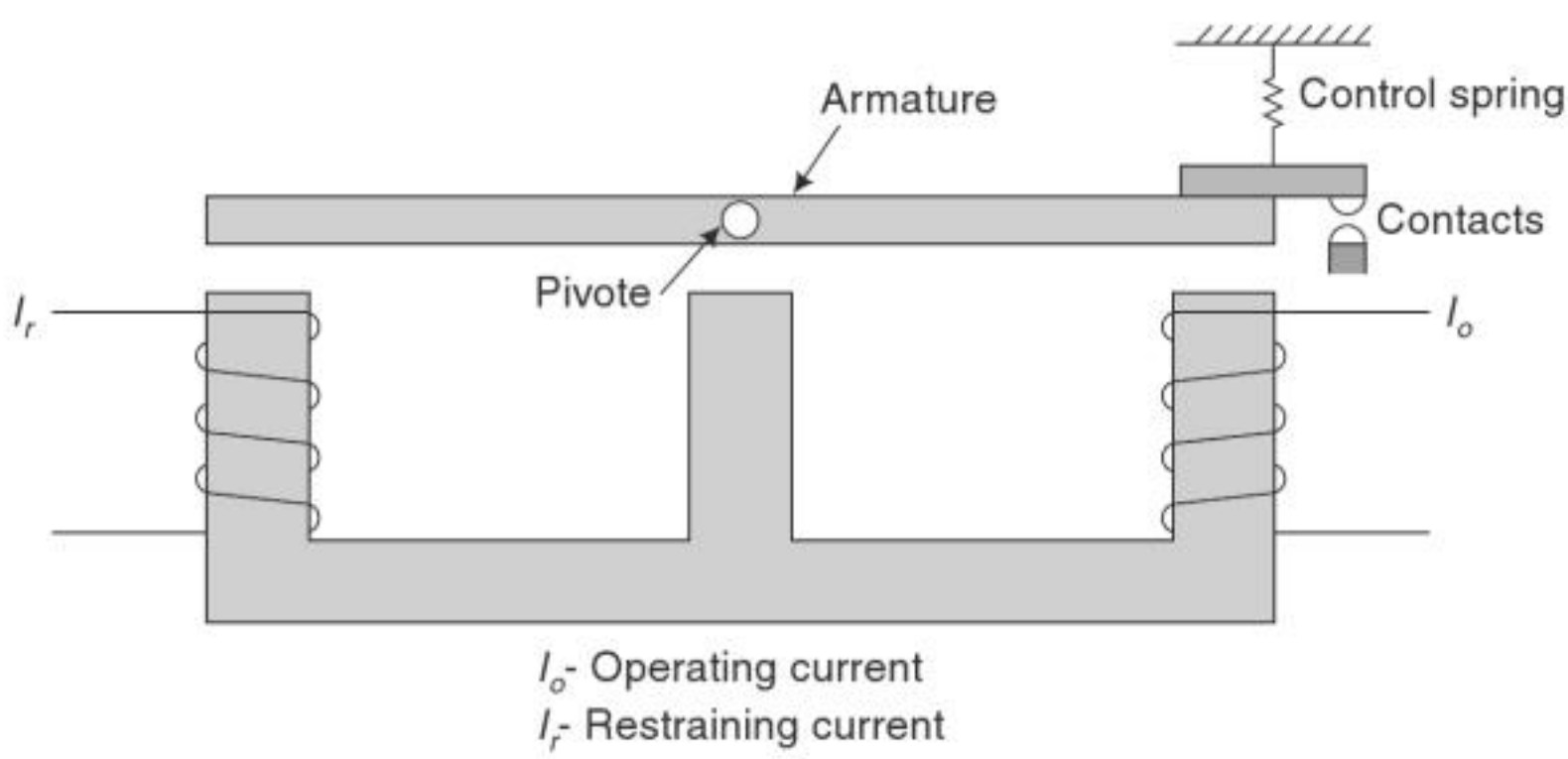

Fig. 2.4 *Balanced beam relay*

Moving Coil Relays

Figure 2.5 shows a permanent magnet moving coil relay. It is also called a polarised dc moving coil relay. It responds to only dc actuating quantities. It can be used with ac actuating quantities in conjunction with rectifiers. Moving coil relays are most sensitivity type electromagnetic relays. Modern relays have a sensitivity of 0.1 mW. These relays are costlier than induction cup or moving iron type relays. The VA burden of moving coil relays is very small. These are used as slave relays with rectifier bridge comparators.

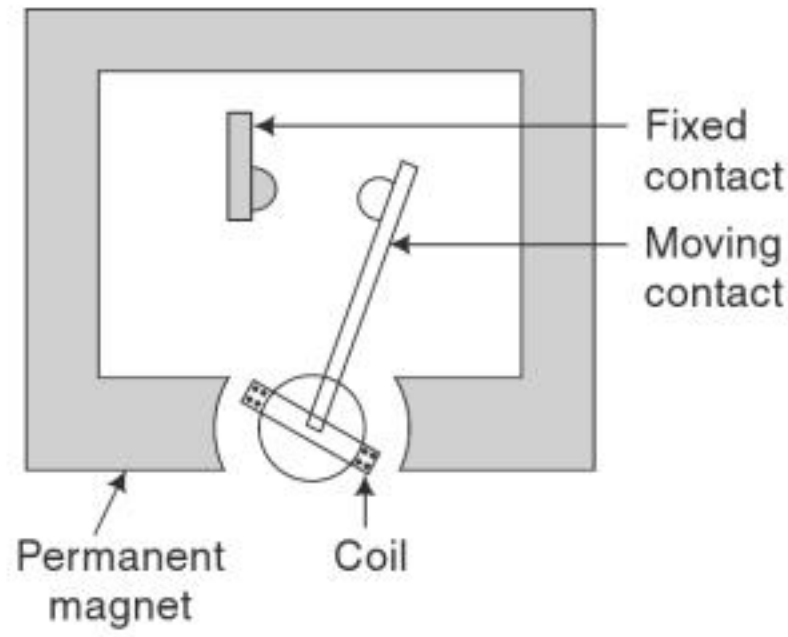

Fig. 2.5 *Rotating moving coil relays*

There are two types of moving coil relays: rotary moving coil and axially moving coil type. The rotary moving coil type is similar to a moving coil indicating instrument. Figure 2.5 shows a rotary moving coil type construction. The components are: a permanent magnet, a coil wound on a non-magnetic former, an iron core, a phosphor bronze spiral spring to provide resetting torque, jewelled bearing, spindle, etc. The moving coil assembly carries an arm which closes the contact. Damping is provided by an aluminum former. The operating time is about 2 cycles. A copper former can be used for heavier damping and slower operation. The operating torque is produced owing to the interaction between the field of the permanent magnet and that of the coil. The operating torque is proprtional to the current carried by the coil. The torque exerted by the spring is proportional to deflection. The relay has an inverse operating time/current characteristic.

Figure 2.6 shows an axially moving coil type construction. As this type has only one air gap, it is more sensitive than the rotary moving coil relay. It is faster than the rotary moving coil relay because of light parts. An operating time of the order of 30 msec can be obtained. Sensitivities as low as 0.1 mW can be obtained. Its coils are wound on a cylindrical former which is suspended horizontally. The coil has only axial movement. The relay has an inverse operating time/current characteristic. The axially moving coil relay is a delicate relay and since the contact gap is small, it has to be handled carefully.

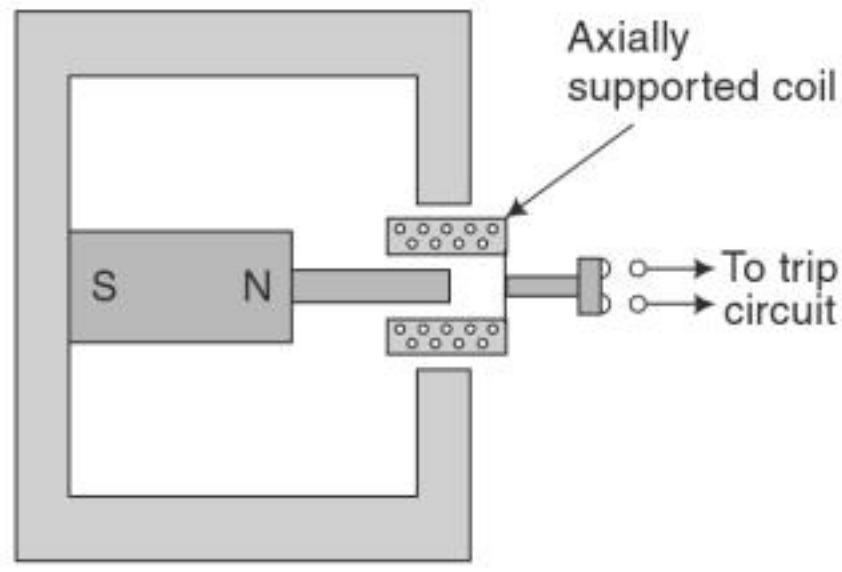

Fig. 2.6 *Axial moving coil relay*

Polarised Moving Iron Relays

Figure 2.7 shows a typical polarised moving iron relay. There are different types of constructions of this type (see Ref. 1). The construction shown in the figure is a flux shifting attracted armature type construction. Polarisation increases the sensitivity of the relay. A permanent magnet is used for polarisation. The permanent magnet produces flux in addition to the main flux. It is a dc polarised relay, meant to be

used with dc only. However, it can be used with ac with rectifiers. Modern relays have sensitivities in the range of 0.03 to 1mW, depending on their construction. Using transistor amplifiers, a relay's sensitivity can be increased to 1 μW for pick-up. It is used as a slave relay with rectifier bridge comparators. As its current carrying coil is stationary, it is more robust than the moving coil type dc polarised relay. Its operating time is 2 msec to 15 msec depending upon the type of construction. An ordinary attracted armature type relay is not sensitive to the polarity of the actuating quantity whereas a dc polarised relay will only operate when the input is of the correct polarity.

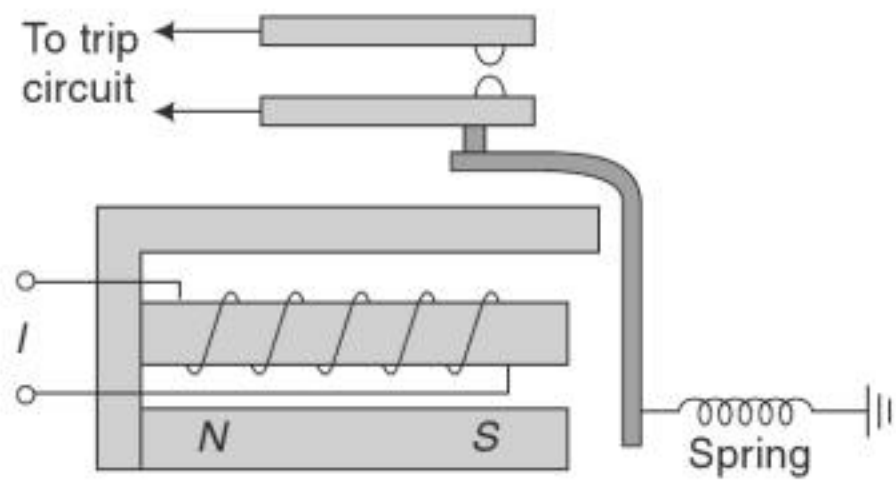

Fig. 2.7 *Polarised moving iron relay*

Reed Relays

A reed relay consists of a coil and nickel-iron strips (reeds) sealed in a closed glass capsule, as shown in Fig. 2.8. The coil surrounds the reed contact. When the coil is energised, a magnetic field is produced which causes the reeds to come together and close the contact. Reed relays are very reliable and are maintenance free. As far as their construction is concerned, they are electromagnetic relays. But from the service point of view, they serve as static relays. They are used for control and other purposes.

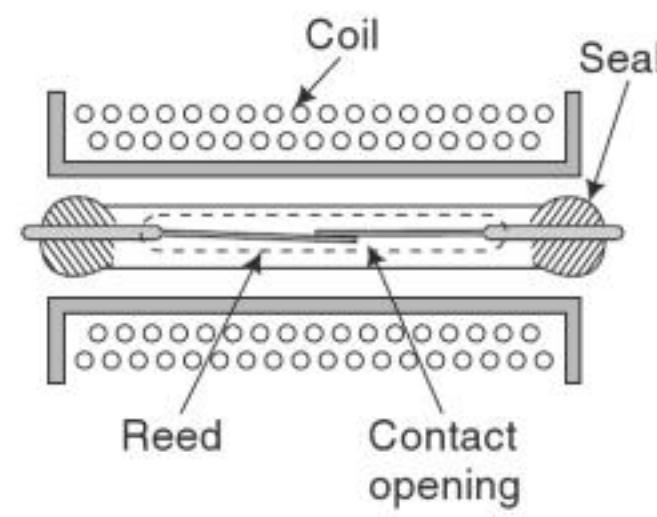

Fig. 2.8 *Reed relay*

They can also be used as a protective relays. They are quite suitable to be used as slave relays. Their input requirement is 1 W to 3 W and they have speed of 1 or 2 msec. They are completely bounce free and are more suitable for normally-closed applications. Heavy duty reed relays can close contacts carrying 2 kW at 30 A maximum current or at a maximum of 300 V dc supply. The voltage withstand capacity for the insulation between the coil and contacts is about 2 kV. The open contacts can withstand 500 V to 1 kV.

2.2.2 Induction Relays

Induction relays use electromagnetic induction principle for their operation. Their principle of operation is same as that of a single-phase induction motor. Hence they can be used for ac currents only. Two types of construction of these Relays are fairly standard: one with an induction disc and the other with an induction cup. In both types of relays, the moving element (disc or cup) is equivalent to the rotor of the induction motor. There is one contrast from the induction motor, i.e., the iron associated with the rotor in the relay is stationary. The moving element acts as a carrier of rotor currents, whereas the magnetic circuit is completed through stationary magnetic elements. Two sources of alternating magnetic flux in which the moving element may turn are required for the operation of induction-type relays. In order to produce an operating torque, the two fluxes must have a phase difference between them.

Induction Disc Relay

There are two types of construction of induction disc relays, namely the shaded pole type, as shown in Fig. 2.9; and watt hour meter type, as shown in Fig. 2.10.

Figure 2.9(a) shows a simple theoretical figure, whereas Fig. 2.9(b) shows the construction which is actually used in practice. The rotating disc is made of aluminium. In the shaded pole type construction, a C-shaped electromagnet is used. One half of each pole of the electromagnet is surrounded by a copper band know as the shading ring. The shaded portion of the pole produces a flux which is displaced in space and time with respect to the flux produced by the unshaded portion of the pole. Thus two alternating fluxes displaced in space and time cut the disc and produce eddy currents in it. Torques are produced by the interaction of each flux with the eddy current produced by the other flux. The resultant torque causes the disc to rotate.

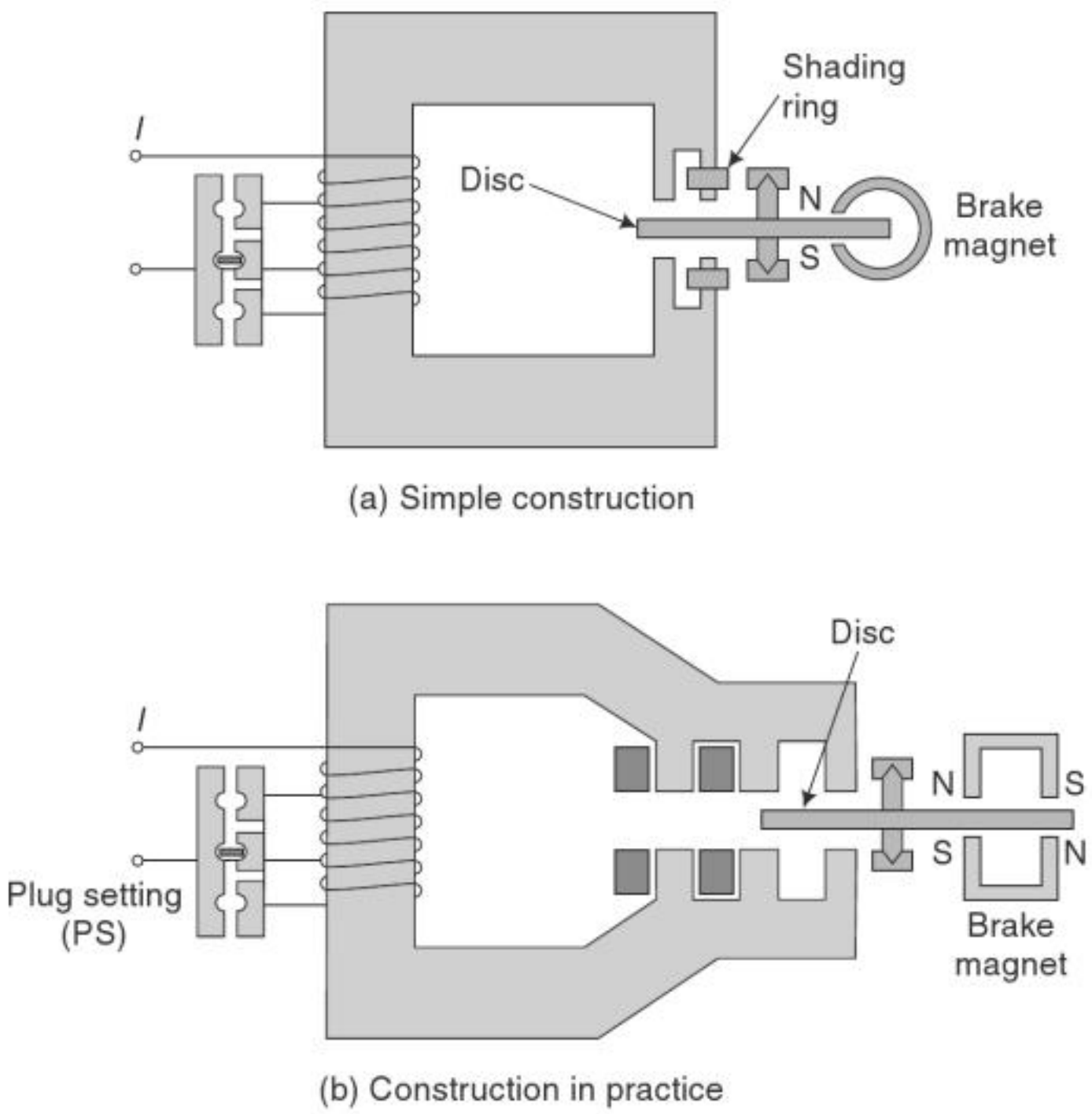

Fig. 2.9 *Shaded pole type induction disc relay*

In wattmetric type of construction, two electromagnets are used: upper and lower one. Each magnet produces an alternating flux which cuts the disc. To obtain a phase displacement between two fluxes produced by upper and lower electromagnets, their coils may be energised by two different sources. If they are energised by the same source, the resistances and reactances of the two circuits are made different so that there will be sufficient phase difference between the two fluxes.

Induction disc type construction is robust and reliable. It is used for overcurrent protection. Disc type units gives an inverse time current characteristic and are slow

compared to the induction cup and attracted armature type relays. The induction disc type is used for slow-speed relays. Its operating time is adjustable and is employed where a time-delay is required. Its reset/pick-up ratio is high, above 95% because its operation does not involve any change in the air gap. The VA burden depends on its application, and is generally of the order of 2.5 VA. The torque is proportional to the square of the actuating current if single actuating quantity is used.

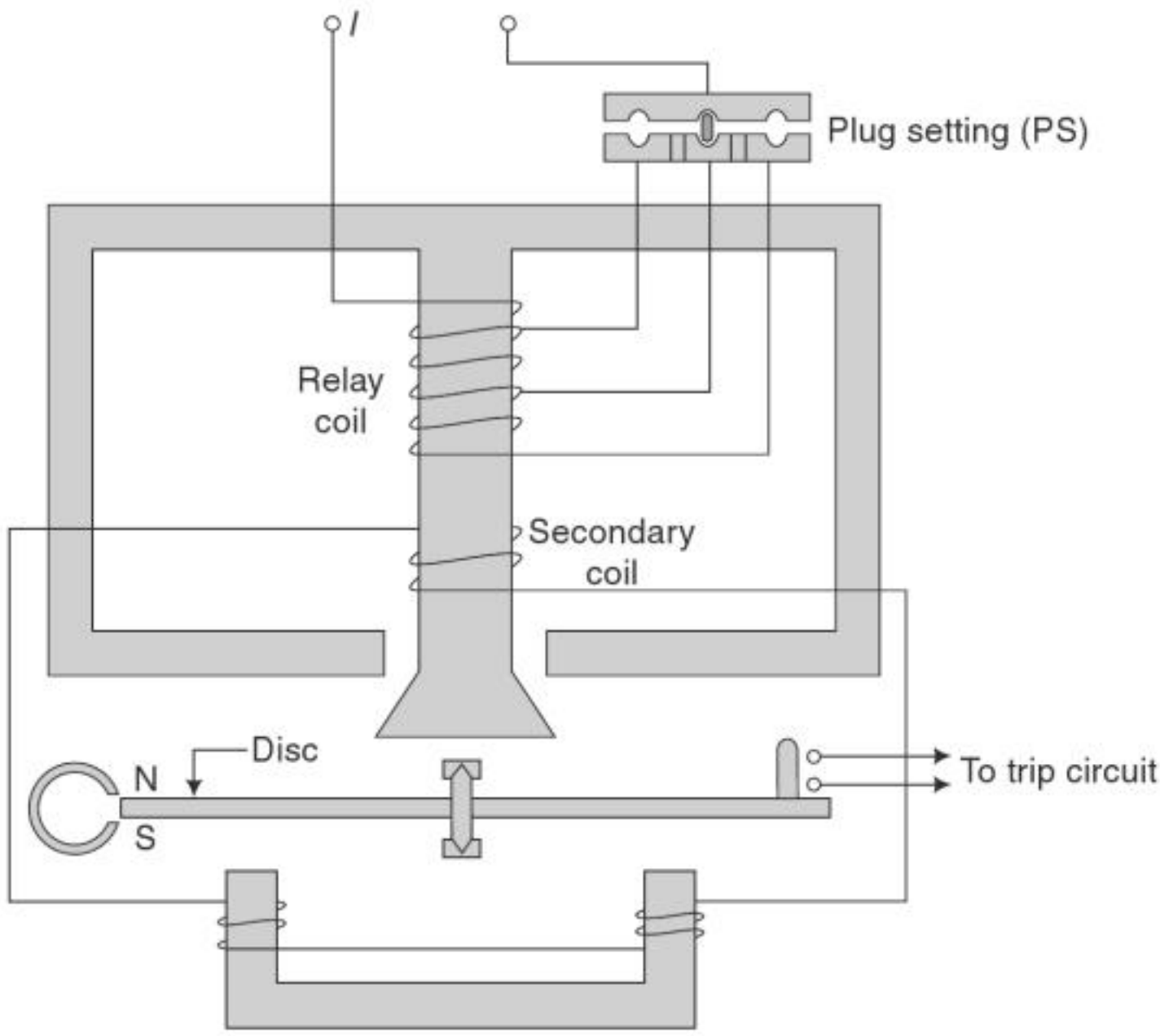

Fig. 2.10 *Wattmetric type induction-disc relay*

A spring is used to supply the resetting torque. A permanent magnet is employed to produce eddy current braking to the disc. The magnets should remain stable with age so that its accuracy will not be affected. Magnets of high coercive force are used for the purpose. The braking torque is proportional to the speed of the disc. When the operating current exceeds pick-up value, driving torque is produced and the disc accelerates to a speed where the braking torque balances the driving torque. The disc rotates at a speed proportional to the driving torque.

It rotates at a constant speed for a given current. The disc inertia should be as small as possible, so that it should stop rotating as soon as the fault current disappears when circuit breaker operates at any other location or fault current is for a short moment (i.e. transient in nature). After the cessation of the fault current, the disc will travel to some distance due to inertia. This distance should be minimum. It is called the over-run of the disc. A brake magnet is used to minimise over-run. The over-run is usually not more than 2 cycles on the interruption of a current which is 20 times the current setting.

At a current below pick-up value, the disc remains stationary by the tension of the control spring acting against the normal direction of disc rotation. The disc rests

against a backstop. The position of the backstop is adjustable and therefore, the distance by which the moving contact of the relay travels before it closes contacts, can be varied. The distance of travel is adjusted for the time setting of the relay.

The rotor (disc) carries an arm which is attached to its spindle. The spindle is supported by jewelled bearings. The arm bridges the relay contacts. In earlier constructions, there were two contacts which were bridged when the relay operated. In modern units however, there is a single contact with a flexible lead-in.

Current Setting

In disc type units, there are a number of tapping provided on coil to select the desired pick-up value of the current. These tapping are shown in Fig. 2.10. This will be discussed in the next chapter.

Time Setting

The distance which the disc travels before it closes the relay contact can be adjusted by adjusting the position of the backstop. If the backstop is advanced in the normal direction of rotation, the distance of travel is reduced, resulting in a shorter operating time of the relay. More details on time-setting will be discussed in the next chapter.

Printed Disc Relay

Figure 2.11 shows the construction of a printed disc inverse time relay. Its operating principle is the same as that of a dynamometer type instrument.

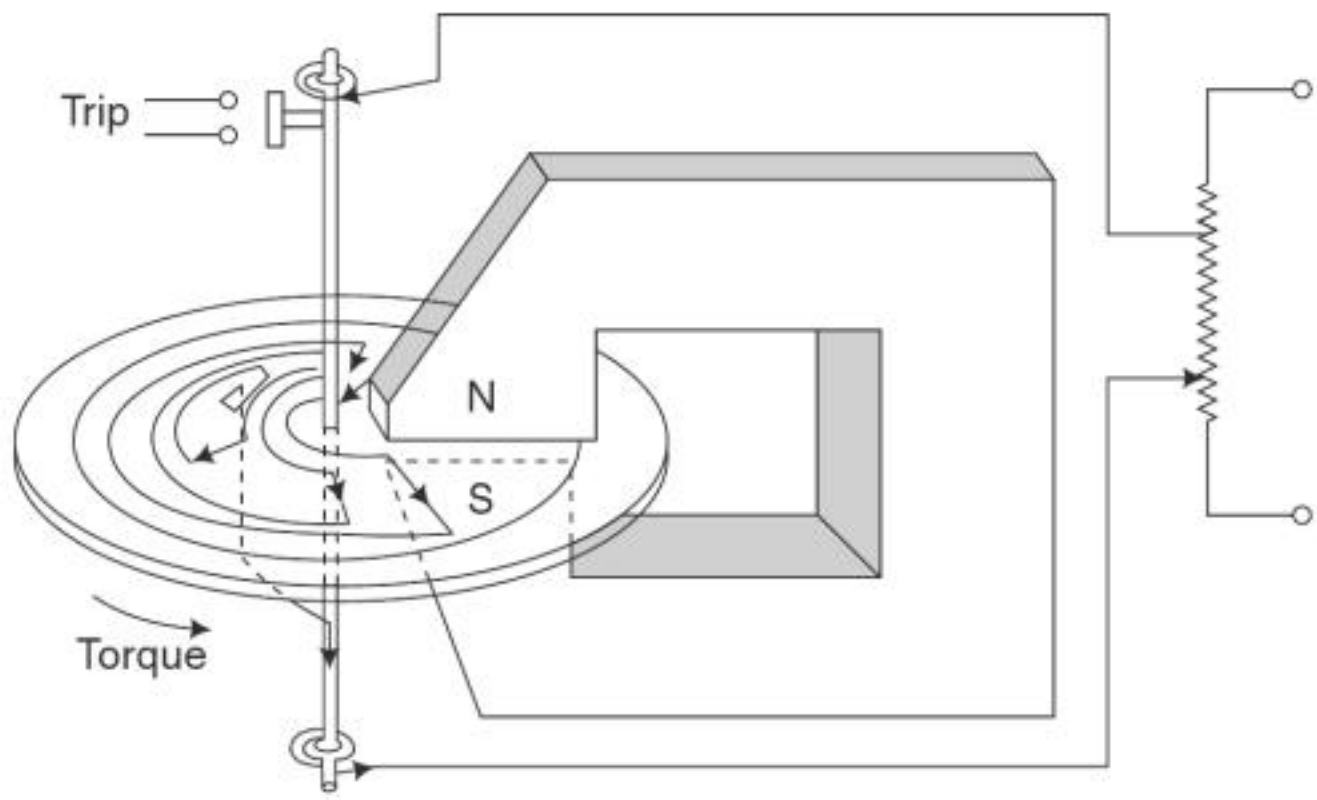

Fig. 2.11 *Printed disc inverse time relay*

There is a permanent magnet to produce a magnetic field. The current from the CT is fed to the printed disc through a rectifier. When a current carrying conductor is placed in a magnetic field, a force is developed, thereby a torque is exerted on it. On this very principle, torque is produced in a printed disc relay.

Figure 2.12 shows the construction of a printed disc extremely inverse time relay ($I^2t = K$ relay). To obtain $I^2t = K$ characteristic, an electromagnet and a printed disc are used. The electromagnet is energised from the CT through a rectifier.

Printed disc relays give a much more accurate time characteristic. They are also very efficient. A printed disc relay is 50 to100 times more efficient than the induction

disc type. The maximum efficiency that an induction disc relay can have is only about 0.05%, which is extremely poor. Characteristics other than inverse time-current characteristic can be obtained by including a non-linear network in between the printed circuit of the disc and the rectified current input.

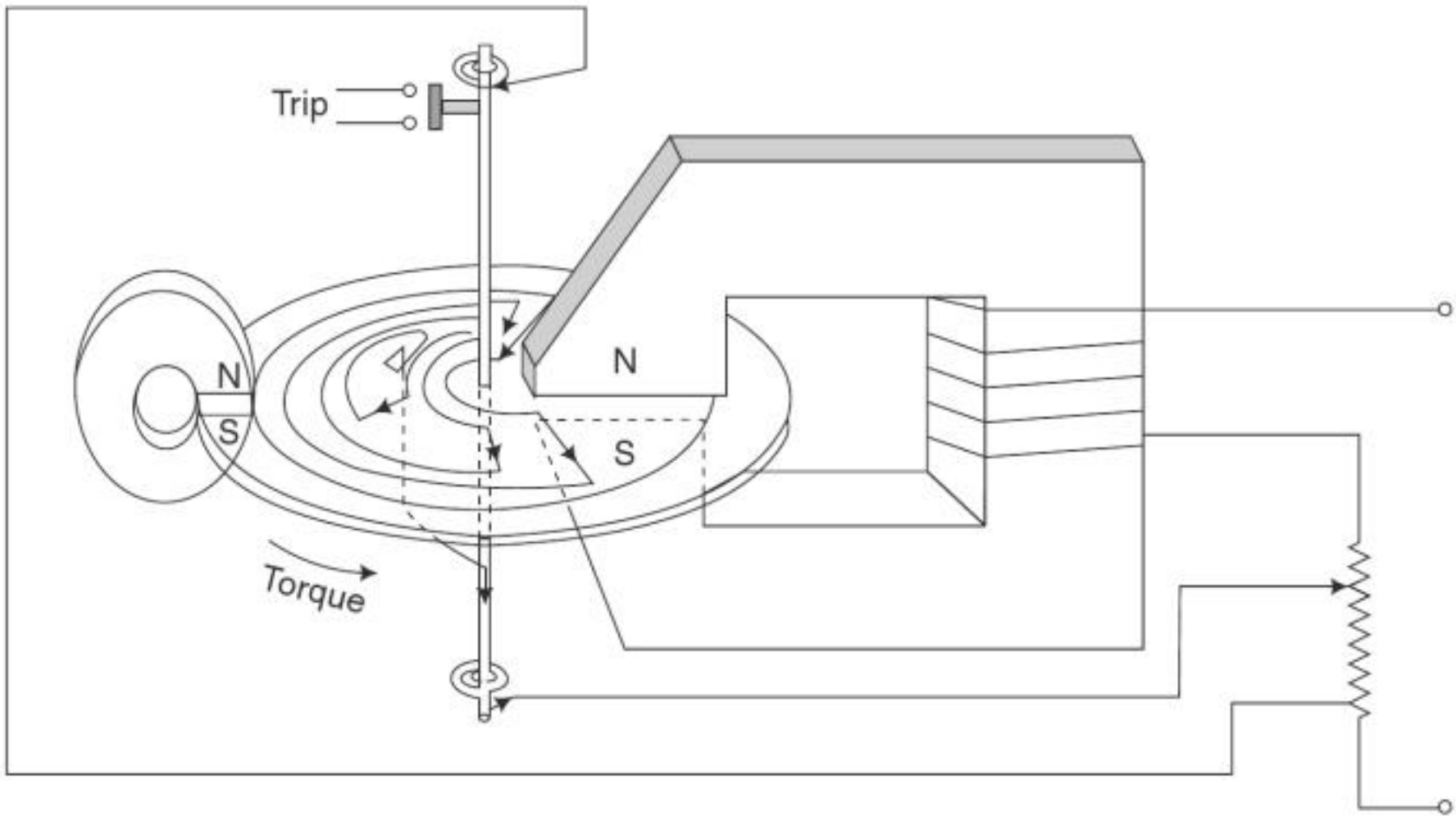

Fig. 2.12 *Printed disc extremely inverse time relay*

Induction Cup Relay

Figure 2.13 shows an induction cup relay. A stationary iron core is placed inside the rotating cup to decrease the air gap without increasing inertia. The spindle of the cup carries an arm which closes contacts. A spring is employed to provide a resetting torque. When two actuating quantities are applied, one may produce an operating torque while the other may produce restraining torque. Brake magnets are not used with induction cup type relays. It operates on the same principle as that of an induction motor. It employs a 4 or 8-pole structure.

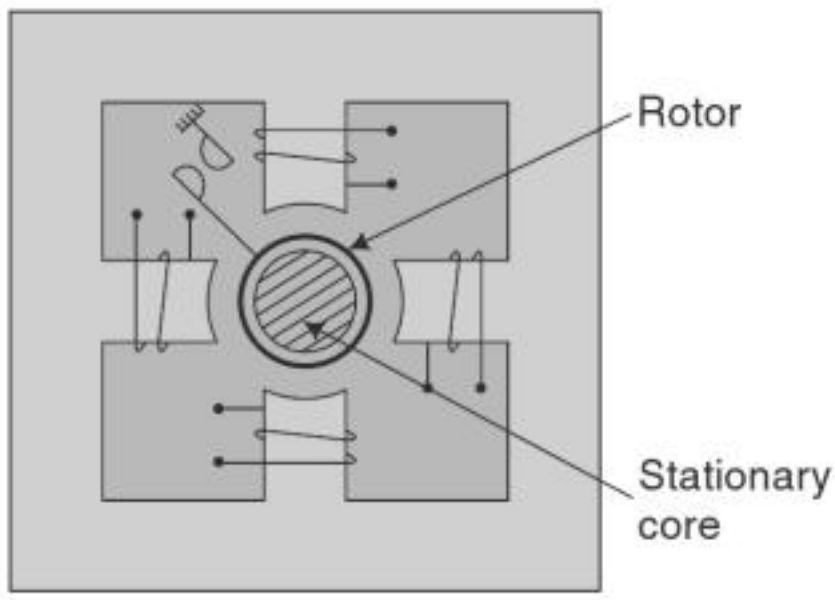

Fig. 2.13 *Induction cup relay*

The rotor is a hollow cylinder (inverted cup). Two pairs of coils, as shown in the figure, produce a rotating field which induces current in the rotor. A torque is produced due to the interaction between the rotating flux and the induced current, which causes rotation. The inertia of the cup is much less than that of a disc. The magnetic system is more efficient and hence the magnetic leakage in the magnetic circuit is minimum. This type of a magnetic system also reduces the resistance of the induced current path in the rotor. Due to the low weight of the rotor and efficient magnetic system its torque per VA is about three times that of an induction disc type construction. Thus, its VA burden is greatly reduced. It possesses high sensitivity, high speed

and produces a steady non-vibrating torque. Its parasitic torques due to current or voltage alone are small. Its operating time is to the order of 0.01 second. Thus with its high torque/inertia ratio, it is quite suitable for higher speeds of operation.

Magnetic saturation can be avoided by proper design and the relay can be made to have its characteristics linear and accurate over a wide range with very high reset to pick-up ratio. The pick-up and reset values are close together. Thus this type is best suited where normal and abnormal conditions are very close together. It is inherently self compensating for dc transients. In other words, it is less sensitive to dc transients. The other system transients as well as transients associated with CTs and relay circuits can also be minimised by proper design. However, the magnitude of the torque is affected by the variation in the system frequency. Induction cup type relays were widely used for distance and directional relays. Later, however, they were replaced by bridge rectifier type static relays.

Theory of Induction Relay Torque

Fluxes ϕ_1 and ϕ_2 are produced in a disc type construction by shading technique. In watt-metric type construction, ϕ_1 is produced by the upper magnet and ϕ_2 by the lower magnet. A voltage is induced in a coil wound on the lower magnet by transformer action. The current flowing in this coil produces flux ϕ_2. In case of the cup type construction, ϕ_1 and ϕ_2 are produced by pairs of coils, as shown in Fig. 2.13. The theory given below is true for both disc type and cup type induction relays. Figure 2.14 shows how force is produced in a rotor which is cut by ϕ_1 and ϕ_2. These fluxes are alternating quantities and can be expressed as follows.

$$\phi_1 = \phi_{1m} \sin \omega t \qquad \phi_2 = \phi_{2m} \sin (\omega t + \theta)$$

where θ is the phase difference between ϕ_1 and ϕ_2. The flux ϕ_2 leads ϕ_1 by θ.

Voltages induced in the rotor are:

$$e_1 \propto \frac{d\phi_1}{dt}$$
$$\propto \phi_{1m} \cos \omega t$$
$$e_2 \propto \frac{d\phi_2}{dt}$$
$$\propto \phi_{2m} \cos (\omega t + \theta)$$

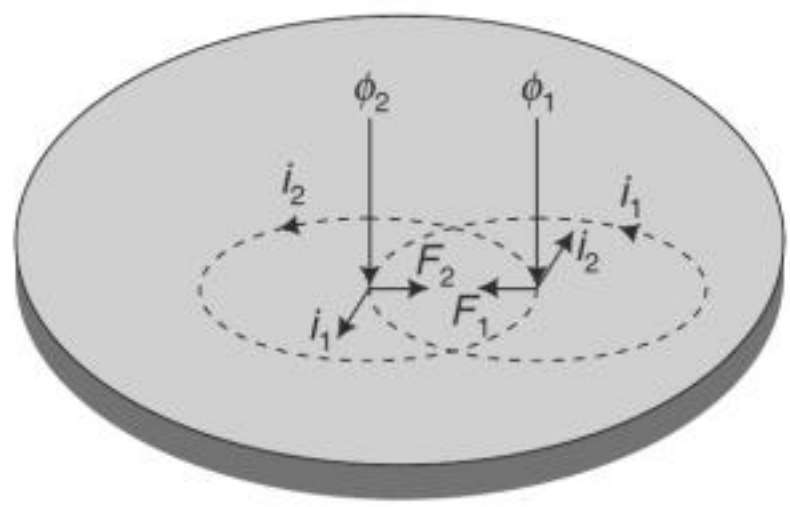

Fig. 2.14 *Torque produced in an induction relay*

As the path of eddy currents in the rotor has negligible self-inductance, with negligible error it may be assumed that the induced eddy currents in the rotor are in phase with their voltages.

$$i_1 \propto \phi_{1m} \cos \omega t$$
$$i_2 \propto \phi_{2m} \cos (\omega t + \theta)$$

The current produced by the flux interacts with other flux and vice versa. The forces produced are:

$$F_1 \propto \phi_1 \, i_2$$
$$\propto \phi_{1m} \sin \omega t \cdot \phi_{2m} \cos (\omega t + \theta)$$
$$\propto \phi_{1m} \, \phi_{2m} \cos (\omega t + \theta) \cdot \sin \omega t$$

$$F_2 \propto \phi_2 i_1$$
$$\propto \phi_{2m} \sin(\omega t + \theta) \cdot \phi_{1m} \cos \omega t$$
$$\propto \phi_{1m} \phi_{2m} \sin(\omega t + \theta) \cdot \cos \omega t$$

As these forces are in opposition, the resultant force is

$$F = (F_2 - F_1)$$
$$\propto \phi_{1m} \phi_{2m} [\sin(\omega t + \theta) \cos \omega t - \cos(\omega t + \theta) \cdot \sin \omega t]$$
$$\propto \phi_{1m} \phi_{2m} \sin \theta$$

The suffix m is usually dropped and the expression is written in the form of $F = K\phi_1 \phi_2 \sin \theta$. In this expression, ϕ_1 and ϕ_2 are rms values.

If the same current produces ϕ_1 and ϕ_2 the force produced is given by

$$F = K I^2 \sin \theta$$

where θ is the angle between ϕ_1 and ϕ_2. If two actuating currants M and N produce ϕ_1 and ϕ_2, the force produced is

$$F = KMN \sin \theta$$

2.2.3 Thermal Relays

These relays utilise the electro-thermal effect of the actuating current for their operation. They are widely used for the protection of small motors against overloading and unbalanced currents. The thermal element is a bimetallic strip, usually wound into a spiral to obtain a greater length, resulting in a greater sensitivity. A bimetallic element consists of two metal strips of different coefficients of thermal expansion, joined together. When it heats up one strip expands more than the other. This results in the bending of the bimetallic strip. The thermal element can be heated directly by passing the actuating current through the strip, but usually a heater coil is employed. When the bimetallic element heats up, it bends and deflects, thereby closing the relay contacts. For the ambient temperature compensation, a dummy bimetallic element *shielded* from the heater coil and designed to oppose the bending of the main bimetallic strip is employed. When the strip is in a spiral form, the unequal expansions of the two metals causes the unwinding of the spiral, which results in the closure of the contacts. Fig. 2.15(a) shows a simple arrangement to indicate the operating principle. Figure 2.15(b) shows a spiral form. Unimetallic strips are also used as thermal elements in a hair-pin like shape, as shown in Fig. 2.15(c). When the strip gets heated it expands and closes the contacts.

For the protection of 3-phase motors, three bimetallic strips are used. They are energised by currents from the three phases. Their contacts are arranged in such a way that if any one of the spirals moves differently from the other, due to an unbalance exceeding 12%, their contacts meet and cause the circuit breakers to trip. These spirals also protect the motor against overloading.

Thermocouples and resistance temperature detectors are also used in protection. In the protection of a large generator, such elements are placed in the stator slots. The element forms an arm of a balancing bridge. In normal condition, the bridge is balanced. When the temperature exceeds a certain limit, the bridge becomes unbalanced. The out-of-balance current energises a relay which trips a circuit breaker. This will be discussed in detail in the chapter dealing with protection of machines.

Copyrighted material

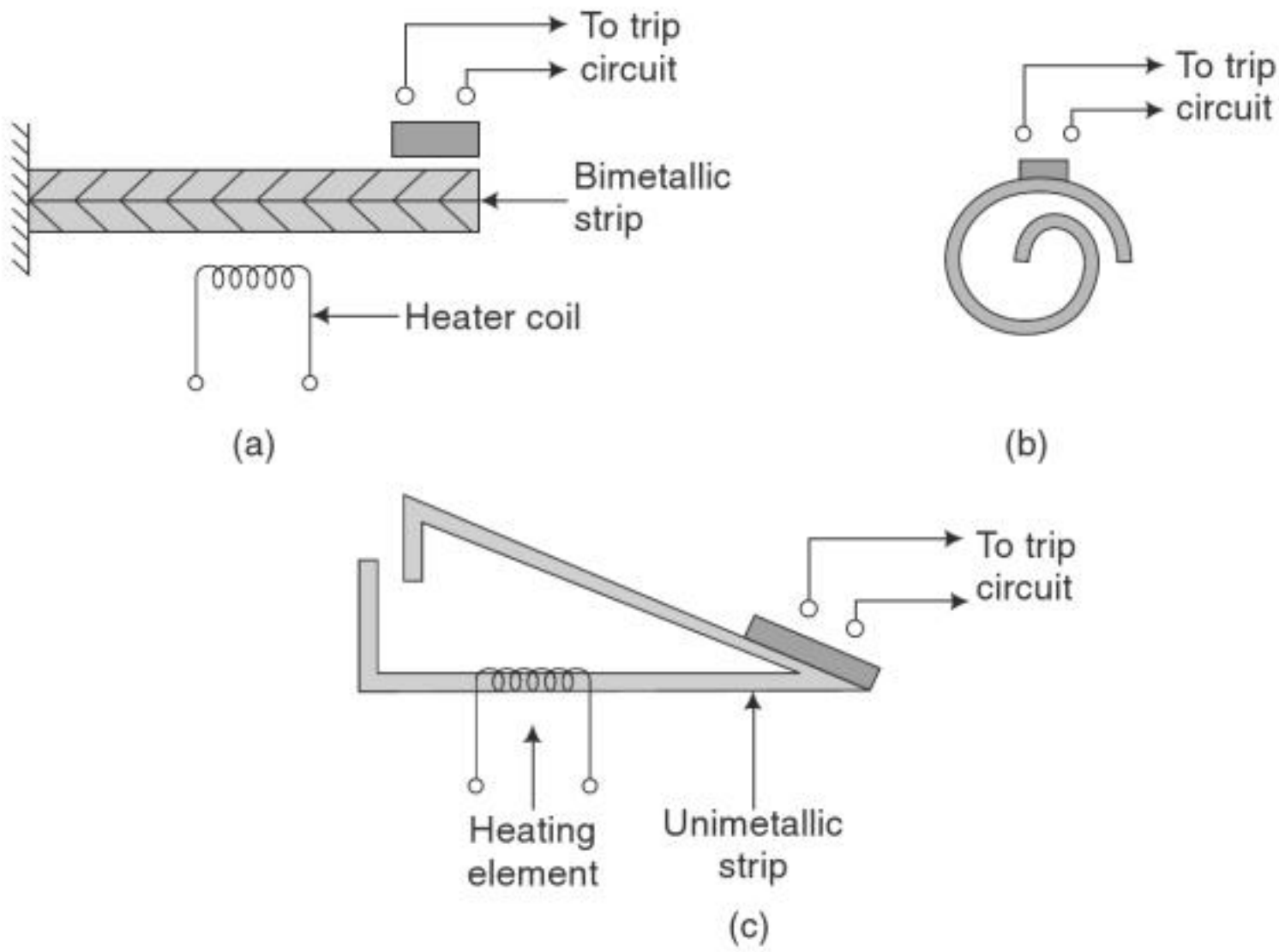

Fig. 2.15 *(a) Bimetallic thermal relay (b) Bimetallic spiral type thermal relay (c) Unimetallic thermal relay*

2.2.4 Auxiliary Relay, Auxiliary Switch and Flag

A protective relay is assisted by auxiliary relays for a number of important operations. A protective relay performs the task of measurement and under the required condition, it closes its contacts. It is relieved of other duties such as tripping, time lag, breaking of trip circuit current, giving alarm, showing flags etc. These duties are performed by auxiliary relays. Auxiliary relays repeat the operations of protective relays, control switches, etc. Repeat contact and auxiliary switches are also used to assist protective relays. The reasons for employing auxiliary relays, repeat contactors and auxiliary switches are:

(i) Protective relay contacts are delicate and light in weight. They are not capable of carrying large amount of current for a long period.

(ii) The protective relays do not have enough contacts to perform all duties required in a protective scheme.

The commonly used auxiliary relays have been described below.

Seal-in Relay

A seal-in relay is an auxiliary relay which is employed to protect the contacts of a protective relay. Once the protective relay closes its contacts, the seal-in relay is energized. Its contacts bypass the contacts of the protective relay, close and seal the circuit while the tripping current flows. It may also give an indication by showing a flag (target). It is an instantaneous relay, operates on attracted armature principle.

Time-lag Relays

Time-lag relays operate after a preset time-lag. They are used in protection schemes as a means of time discrimination, for example, time graded schemes which will be

discussed in Chapter 5. They are also used in control and alarm circuits to allow time for the required sequence of operations to take place. The principle of producing time delays will be discussed later (see sec. 2.2.6).

Alarm Relays

An alarm relay gives both an audible and a visual indication. At a substation, it is sufficient to provide a trip alarm and one non-trip alarm, which is common to the whole substation. In the control room of a generating station, the trip alarm and non-trip alarm should be separate for each primary circuit. There is an arrangement for alarm cancellation by pressing a button. The alarm circuit is interrupted on pushing this button. When the relay is de-energised, the initiating contact of the cancellation mechanism is reset so that it can receive another alarm.

Repeat Contactors

A repeat contactor repeats the operation of a protective relay. It is sometimes needed because a protective relay may not have a sufficient number of contacts. It may also be required to take over the operation from the initiating relay if the contacts of the latter are not designed for carrying current for long periods. Its most important requirements are that it should be fast and absolutely reliable. It should also be robust and compact. It is usually mounted in the same case as the relay for which it is required to repeat the operation.

Repeat contactors operate on the attracted armature principle. It may be connected either in series or in parallel with the relay. It contains a number of contacts which are placed in parallel. However, having more than three contacts in parallel is usually not pratical.

Flag or Target

When a relay operates, a flag is indicated to show its operation. When on a relay panel there are several relays, it is the flag that indicates, the relay that has operated. This helps the operator to know the cause of the tripping of the circuit breaker. It is also called the target or indicator. Its coil is connected in series with the trip coil of the circuit breaker, as shown in Fig. 2.16. The resetting of a flag indicator is usually manual. There is a button or knob outside the relay case to reset the flag indicator. A flag indicator may either be electrical or mechanical. In a mechanical flag indicator, the movement of the armature of the relay pushes a small shutter to expose the flag. In an electrically operated flag indicator there is a solenoid which is energised when relay contacts are closed. Electrical flags being more reliable are preferred.

Auxiliary Switch

An auxiliary switch is connected in series with the trip-coil circuit, as shown in Fig. 2.16. It is mechanically interlocked with the operating mechanism of the circuit breaker so that the auxiliary switch opens when the circuit breaker opens. The opening of the auxiliary switch prevents unnecessary drainage of the battery.

When the trip-coil of the circuit breaker is energised, it actuates a mechanism of the circuit breaker, which causes the operating force to come into action to open the circuit breaker.

Copyrighted material

2.2.5 Connections for Seal-in Relay, Auxiliary Switch and Circuit Breaker Trip-Coil

Figure 2.16(a) shows the connection for a seal-in relay, circuit breaker trip-coil and auxiliary switch. In order to protect the contacts of the protective relay, a seal-in relay is employed. Its contacts bypass the contacts of the protective relay and seal the circuit closed, while the tripping current flows. Some relays employ a simple holding coil in series with the relay contacts, as shown in Fig. 2.16(b). The holding coil is wound on a small soft iron core which acts on a small armature on the moving-contacts assembly to hold the contacts tightly closed, once they have established the flow of current through the trip coil. The holding coils are used to protect the relay contacts against damage which may be caused due to the make and break action of the contacts.

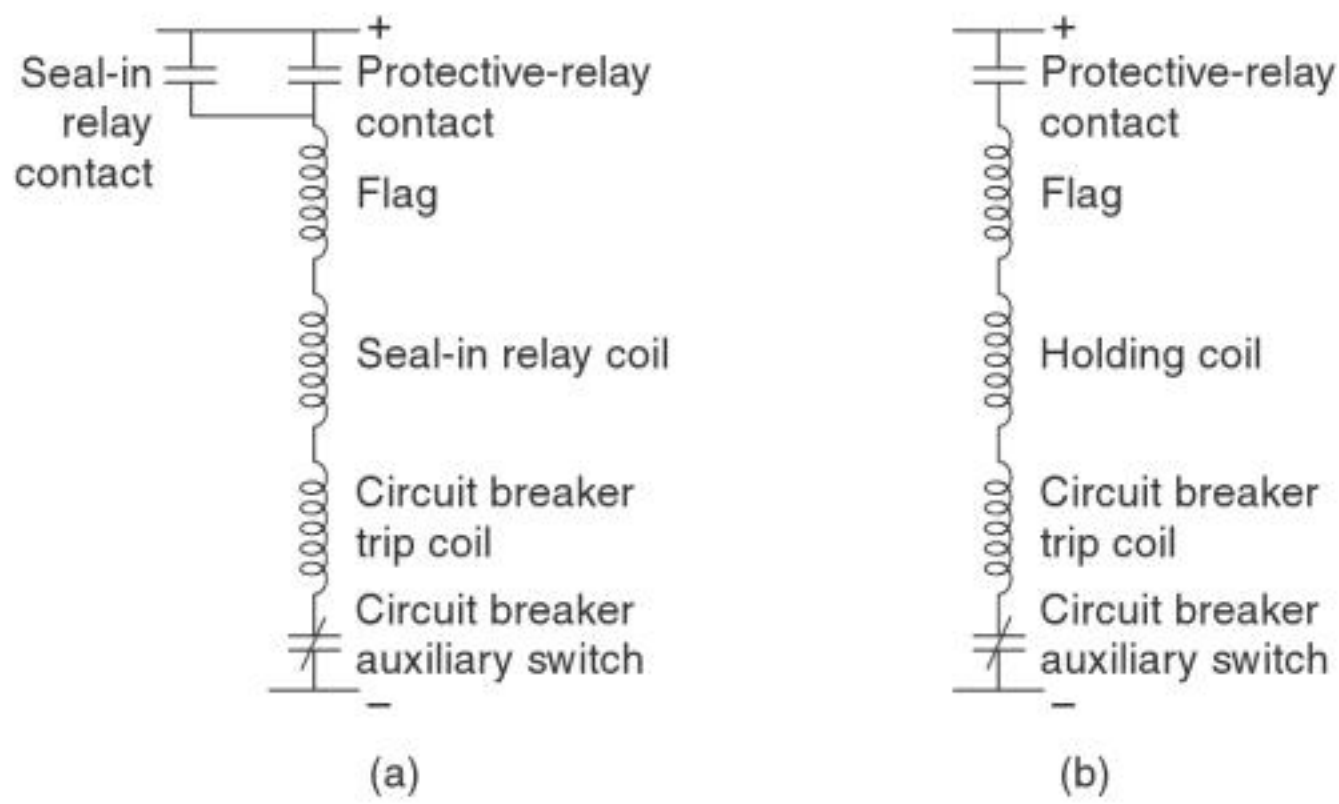

Fig. 2.16 *Circuit breaker trip coil circuit (a) With seal-in relay (b) With holding coil*

2.2.6 Techniques to Produce Time-delays

Sometimes, a protective relay is required to operate after a preset time delay. Intentional time delays are necessary for such relays. The intentional time delay may be caused by inherent design features of the relay or by a delay producing component of the relay. Sometimes, a starting relay or instantaneous relay is used in conjunction with a timing relay to perform certain operations after a preset time. A time-lag relay (timing relay) is an auxiliary relay designed to operate after a preset time-delay.

Mechanical Time-delay

The time delay may be produced by mechanical, electrical or electronic components. Oil dashpots, pneumatic damping, toothed gears, cams, mercury switches, etc. are some examples of mechanical devices which are used to produce a time delay. In an oil dashpot, there is a mechanically operated plunger. Oil flowing through an orifice in the cylinder retards the relay movement. The pneumatic timer contains a metal chamber, a diaphragm and solenoid. These mechanical devices are crude devices and do not produce accurate delays. The mercury switch, however, gives an accurate delay. The mercury tube has two sections. One section contains mercury and the other section contains contacts. The tube is tilted so that mercury flows from one

section to the other and bridges the contacts. The flow of mercury is impeded by a construction between the two sections of the tube. The time setting is fixed by the design of the tube. It is not possible to have a range of time settings on a particular mercury switch. Toothed gears or cams are also used to produce time delay.

Thermal Time-delay

Thermal devices employing expansion of bimetal strip or spiral, unimetal (brass) strips, etc. are also used to produce time-delay.

Electrical Time-delay

Time delay can be produced by employing a short-circuiting ring around a solenoid pole; a circuit containing reactance, capacitance or non-linear resistance; a resonant circuit, etc.

Short-circuiting Ring

A short-circuiting copper band is fitted around the pole piece of an attracted armature hinged-type relay. This arrangement provides eddy current path for damping. To obtain a time-delay on pick-up, the band is placed at the armature end of the core. By this technique, a delay of about 0.1 s can be produced in pick-up with a large armature gap, and a stiff restraining spring. To obtain a delayed reset, the band is placed at the frame end of the solenoid. A delay up to 0.5 s in drop out can be obtained with a short lever arm and a light spring load. Time-delay can also be produced by employing a copper tube inside the coil.

Capacitance

A capacitor which is connected in parallel with the relay coil is changed through a resistor, as shown in Fig. 2.17(a). A longer time-delay is obtained by this technique. A delay of up to 0.5 s can be obtained on pick-up with a capacitor of reasonable size. For ac applications, a rectifier should be included.

Resonant Circuit

A resonant circuit, as shown in Fig. 2.17(b) can be employed to produce a delay of up to 3 cycles.

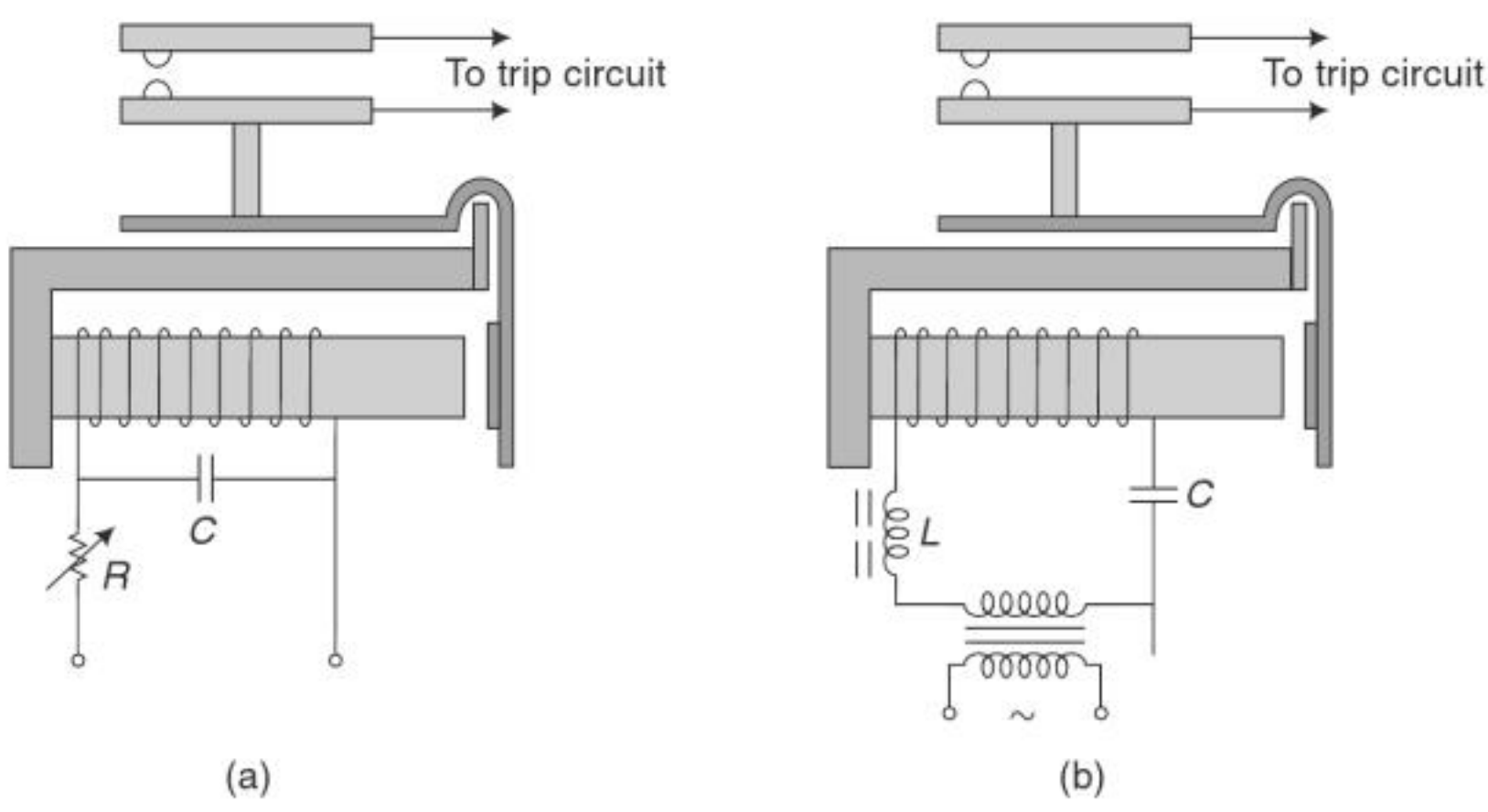

Fig. 2.17 *(a) Capacitor charge delay (b) Resonance build-up delay*

Ballistic Resistance

This technique is based on the principle of delaying the build-up of operating voltage. This includes thermistors or filament lamps. Figure 2.17(c) shows a metal filament lamp connected across the relay coil. A resistance is also placed in the circuit as shown in the figure. The hot resistance of the lamp filament is 10 times its cold resistance. The relay coil is short-circuited by the lamp, thereby keeping the magnetic flux to zero for a short time until the filament becomes incandescent.

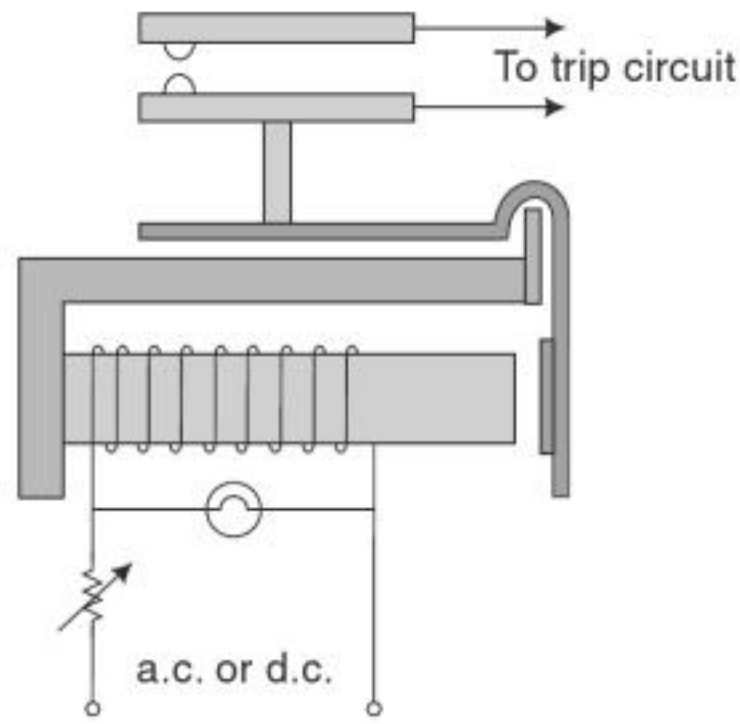

Fig. 2.17 *(c) Lamp filament heating delay*

Alternatively, a thermistor or a carbon filament can be placed in series with the relay coil. The thermistor resistance being high at room temperature limits the coil current. As the current drawn by the relay coil heats the thermistor, its resistance decreases until the relay current becomes sufficient for pick-up.

Synchronous Motor

A synchronous motor, geared to a reduced speed can be also used on ac to produce more precise, long time delays.

Electronic Time Delay

Longer time delays are obtained with *R-C* circuits. R-C circuits are also used with electromagnetic relays, as shown in Fig. 2.17(a). Longer time delays can be obtained with *R-C* circuits when used with electronic relays rather than with electromagnetic relays. This is due to the face that a smaller current is needed with electronic relays, which in turn takes longer time to charge the capacitor.

Figure 2.18 shows a time-delay circuit employing a transistor. A constant dc voltage is applied to an *R-C* network to charge the capaci- tor *C* through resistor *R*. When the voltage of capacitor *C* reaches a suitable value, the transis- tor starts conducting. A realy is placed in the collector circuit. This relay operates when the transistor starts conducting. The time delay depends on the value of the capacitor and the magnitude of the charging current. As the charging current is small in a transistor circuit, a delay of several minutes can be obtained with a capacitor of only few microfarads. Delays of several hours can be obtained with tantalum capacitors of a few hundred microfarads.

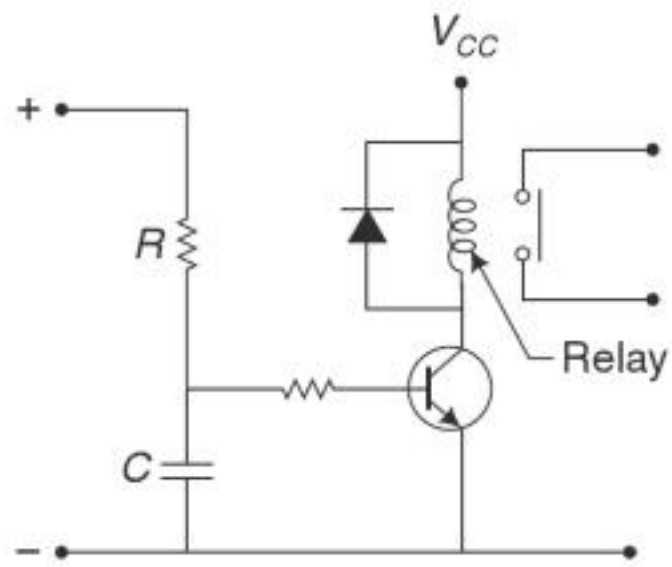

Fig. 2.18 *Static time delay circuit*

Counter

For obtaining even more accurate time-delays, electronic counters are used. A crystal oscillator or some suitable electronic circuitry is employed to generate a train of high frequency pulses. Counters are used as frequency dividers. A number of counters

may be connected in cascade and different time-lags may be obtained from different stages of the cascaded counters.

2.2.7 Bearings

The pivot and jewel bearing is commonly used for precision relays. Spring-mounted jewels are used in modern relays. The design is such that shocks are taken on a shoulder and not on a jewel.

For high sensitivity and low friction, a single ball bearing between two cup-shaped sapphire jewels is used.

Multi-ball bearings provide friction as low as the jewel bearings and have greater resistance to shock. They are also capable of combining side-thrust and end-thrust in a single bearing. Miniature bearings less than 1.6 mm in diameter are now available.

Knife-edge bearings, pin bearings or resilient strips are used in hinged armature relays.

2.2.8 Backstops

When the moving part of the relay is stationary, it rests against a backstop. The material of a backstop should be chosen carefully so that it should not be sticky. To avoid magnetic adherence, the material should be non-metallic. The molecular adherence can be overcome using a hard surface rounded to a large radius. Smooth backstops made of agate or nylon are used.

2.2.9 Contacts

The reliability of protective relays depends on their contact performance. The following are the requirement of good contacts.

(i) Low contact resistance
(ii) High contact pressure
(iii) Freedom from corrosion
(iv) Bounce free
(v) Self-clearing action
(vi) Freedom from sparking
(vii) Dust proof

Silver is the most commonly used material for relay contacts. It has the lowest resistance. Copper is not used because of its higher resistance. Silver cadmium oxide is used where high currents are to be handled. It has low resistance like silver but does not weld or become sticky. An alloy consisting of 67% gold, 26% silver and 7% platinum is used for small currents and very light contact pressure. Non-corroding materials like gold, palladium or rhodium can be used for sensitive relays where the contact pressure needs to be very low. These materials are not recommended for protective relays where high contact pressure is required.

The most reliable relay contact are cylindrical contacts at right angles, as they give the optimum high pressure, bounce-proof contacts, hard smooth contact surfaces and dust proof relay cases minimise the maintenance of protective relays.

Copyrighted material

On silver contacts silver oxide does not form readily. Even when formed, its thickness does not exceed 10 Å and hence can easily be moved aside by high pressure or wiping action. Humid sulphurous and high temperature atmosphere causes corrosion. In polluted atmospheres where coal fires are used, silver sulphide is formed readily, especially in the presence of heat and humidity. It is not breakable like oxides but it is soft and thus can be squeezed aside by high pressure. A thin petrolatum coating can reduce corrosion of contacts without increasing their resistance. It is helpful in polluted atmospheres.

A dust-proof casing is usually used for modern relays. A filter is provided at the back to trap any dust and to allow the relay to breathe. A relay with such a casing is quite suitable for a dusty or otherwise dirty atmosphere. In a relay with poor ventilation, particularly in a sealed relay, high resistance polymers may appear on contacts. This is due to organic emanations from the coil insulation material. All insulating materials, except teflon give off organic vapour to a certain degree. Phenolic resin gives off organic vapours more than others. Polyester and epoxide varnishes now available have good performance and are quite satisfactory for coil insulation. Relay casings with good ventilation and having dust filters minimise the collection of high resistance polymers on the contacts. Encapsulated contacts as in the case of reed relays provide the best solution to the problem. Alternatively, the relay coil can also be encapsulated.

An electromechanical relay used with comparators is usually of a small rating. When such relays control auxiliary relays and timing units, they are to be protected with spark quenching circuits. A series resistor and capacitor connected across the contacts is a simple spark quenching circuit.

2.3 STATIC RELAYS

In a static relay, the comparison or measurement of electrical quantities is performed by a static circuit which gives an output signal for the tripping of a circuit breaker. Most of the present day static relays include a dc polarised relay as a slave relay. The slave relay is an output device and does not perform the function of comparison or measurement. It simply closes contacts. It is used because of its low cost. In a fully static relay, a thyristor is used in place of the electromagnetic slave relay. The electromechanical relay used as a slave relay provides a number of output contacts at low cost. Electromagnetic multicontact tripping arrangements are much simpler than an equivalent group of thyristor circuits.

A static relay (or solid state relay) employs semiconductor diodes, transistors, zener diodes, thyristors, logic gates, etc. as its components. Now-a-days, integrated circuits are being used in place of transistors. They are more reliable and compact.

Earlier, induction cup units were widely used for distance and directional relays. Later these were replaced by rectifier bridge type static relays which employed dc polarised relays as slave relays. Where overcurrent relays are needed, induction disc relays are in universal use throughout the world. But ultimately static relays will supersede all electromagnetic relays, except the attracted armature relays and dc polarised relays as these relays can control many circuit at low costs.

Copyrighted material

2.3.1 Merits and Demerits of Static Relays

The advantages of static relays over electromechanical relays are as follows.

(i) Low burden on CTs and VTs. The static relays consume less power and in most of the cases they draw power from the auxiliary dc supply
(ii) Fast response
(iii) Long life
(iv) High resistance to shock and vibration
(v) Less maintenance due to the absence of moving parts and bearings
(vi) Frequent operations cause no deterioration
(vii) Quick resetting and absence of overshoot
(viii) Compact size
(ix) Greater sensitivity as amplification can be provided easily
(x) Complex relaying characteristics can easily be obtained
(xi) Logic circuits can be used for complex protective schemes

The logic circuit may take decisions to operate under certain conditions and not to operate under other conditions.

The demerits of static relays are as follows:

(i) Static relays are temperature sensitive. Their characteristics may vary with the variation of temperature. Temperature compensation can be made by using thermistors and by using digital techniques for measurements, etc.
(ii) Static relays are sensitive to voltage transients. The semiconductor components may get damaged due to voltage spikes. Filters and shielding can be used for their protection against voltage spikes.
(iii) Static relays need an auxiliary power supply. This can however be easily supplied by a battery or a stabilized power supply.

2.3.2 Comparators

When faults occur on a system, the magnitude of voltage and current and phase angle between voltage and current may change. These quantities during faulty conditions are different from those under healthy conditions. The static relay circuitry is designed to recognise the changes and to distinguish between healthy and faulty conditions. Either magnitudes of voltage/current (or corresponding derived quantities) are compared or phase angle between voltage and current (or corresponding derived quantities) are measured by the static relay circuitry and a trip signal is sent to the circuit breaker when a fault occurs. The part of the circuitry which compares the two actuating quantities either in amplitude or phase is known as the *comparator*. There are two types of comparators—amplitude comparator and phase comparator.

Amplitude Comparator

An amplitude comparator compares the magnitudes of two input quantities, irrespective of the angle between them. One of the input quantities is an operating quantity and the other a restraining quantity. When the amplitude of the operating quantity exceeds the amplitude of the restraining quantity, the relay sends a tripping signal. The actual circuits for comparators will be discussed in subsequent chapters.

Copyrighted material

Phase Comparator

A phase comparator compares two input quantities in phase angle, irrespective of their magnitudes and operates if the phase angle between them is ≤ 90°.

2.3.3 Duality between Amplitude and Phase Comparators

An amplitude comparator can be converted to a phase comparator and vice versa if the input quantities to the comparator are modified. The modified input quantities are the sum and difference of the original two input quantities. To understand this fact, consider the operation of an amplitude comparator which has two input signals M and N as shown in Fig. 2.19(a). It operates when $|M| > |N|$. Now change the input quantities to $(M + N)$ and $(M - N)$ as shown in Fig. 2.19(b). As its circuit is designed for amplitude comparison, now with the changed input, it will operate when $|M + N| > |M - N|$. This condition will be satisfied only when the phase angle between M and N is less than 90°. This has been illustrated with the phasor diagram shown in Fig. 2.20. It means that the comparator with the modified inputs has now become a phase comparator for the original input signals M and N.

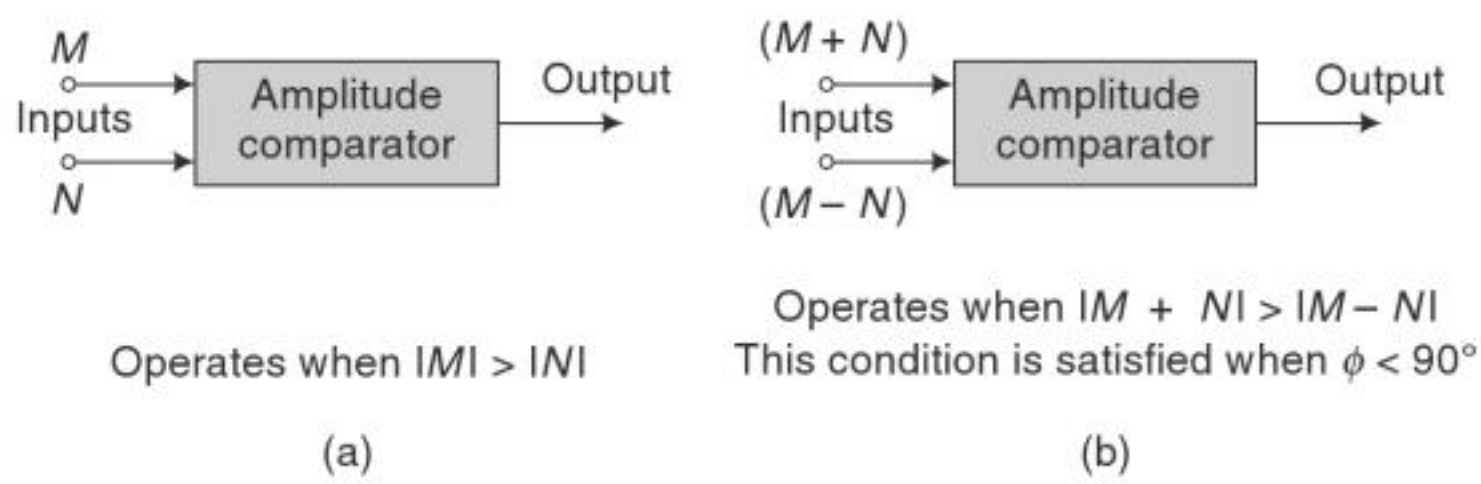

Fig. 2.19 *(a) Amplitude comparator (b) Amplitude comparator used for phase comparison*

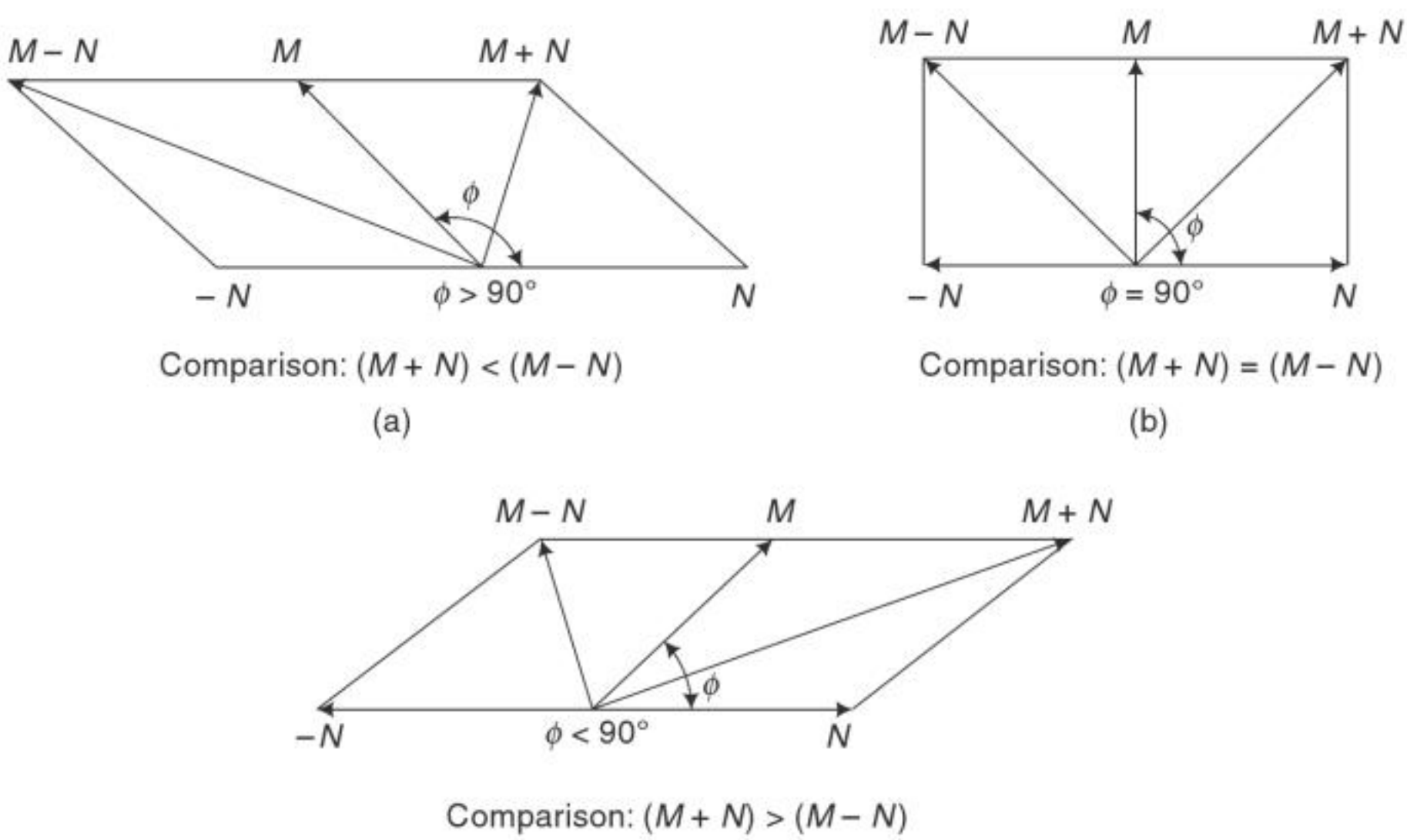

Fig. 2.20 *Phasor diagram for amplitude comparator used for phase comparison*

Similarly, consider a phase comparator shown in Fig. 2.21(a). It compares the phases of input signals M and N. If the phase angle between M and N, i.e. angle ϕ is less than 90°, the comparator operates. Now change the input, signals to $(M + N)$ and $(M - N)$, as in Fig. 2.21(b). With these changed inputs the comparator will operate when phase angle between $(M + N)$ and $(M - N)$, i.e. angle λ is less than 90°. This condition will be satisfied only when $|M| > |N|$. In other words, the phase comparator with changed inputs has now become an amplitude comparator for the original input signals M and N. This has been illustrated with phasor diagrams as shown in Fig. 2.22.

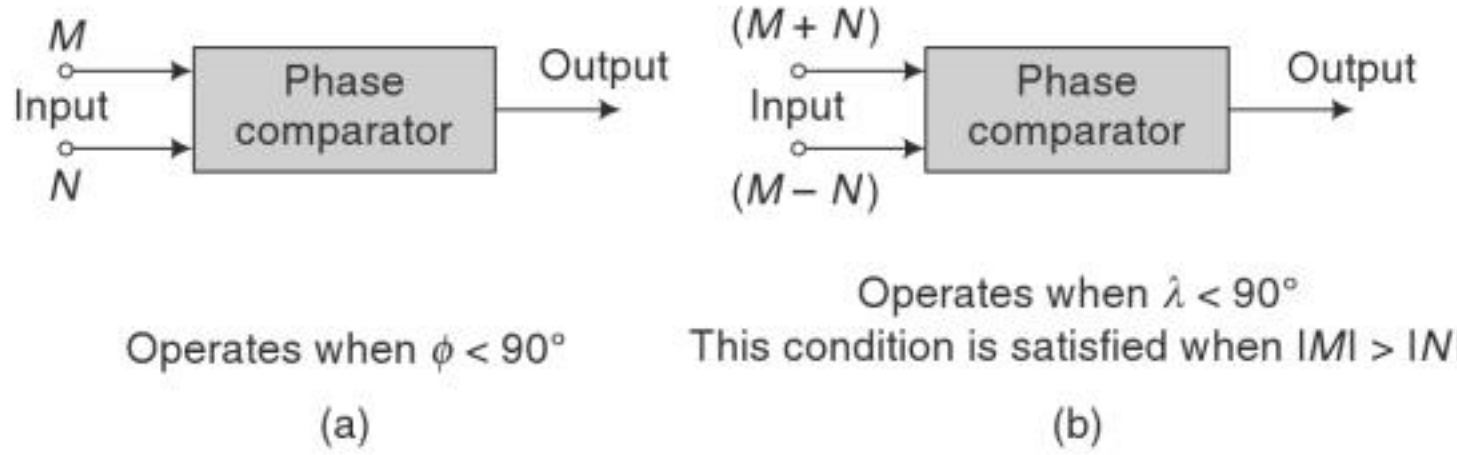

Fig. 2.21 *(a) Phase comparator (b) Phase comparator used for amplitude comparison*

Figure 2.20 shows three phasor diagrams for an amplitude comparator. The phase angle between the original inputs M and N is ϕ. Now the inputs to the amplitude comparator are changed to $(M + N)$ and $(M - N)$ and its behaviour is examined with the help of three phasor diagrams. The three phasor diagrams are with phase angle ϕ (*i*) greater than 90°, (ii) equal to 90° and (iii) less than 90°, respectively. When ϕ is less than 90°, $|M + N|$ become greater than $|M - N|$ and the relay operates with the modified inputs. When ϕ is equal to 90° or greater than 90°, the relay does not operate.

The phasor diagrams show that $|M + N|$ becomes greater than $|M - N|$ only when ϕ is less than 90°. This will be true irrespective of the magnitude of M and N. In other words, this will be true whether $|M| = |N|$ or $|M| > |N|$ or $|M| < |N|$. The figures have been drawn with $|M| = |N|$. The reader can draw phasor diagrams with $|M| < |N|$ or $|M| > |N|$. The results will remain the same. This shows that with changed inputs, the amplitude comparator is converted to a phase comparator for the original inputs.

Figure 2.22 shows three phasor diagrams for a phase comparator. The original inputs are M and N. Now the inputs of the phase comparators are changed to $(M + N)$ and $(M - N)$, and its behavior is examined with the help of three phasor diagrams drawn for (i) $|M| < |N|$, (ii) $|M| = |N|$ and (iii) $|M| > |N|$. The angle between $(M + N)$ and $(M - N)$ is λ. The angle λ becomes less than 90° only when $|M| > |N|$. As the comparator under consideration is a phase comparator, the relay will trip. But for the original inputs M and N, the comparator behaves as an amplitude comparator. This will be true irrespective of the phase angle ϕ between M and N. The figure has been drawn with ϕ less than 90°. The reader can check it by drawing phasors with $\phi = 90°$ or $\phi > 90°$. The result will remain the same.

2.3.4 Types of Amplitude Comparators

As the ratio of the instantaneous values of sinusoidal inputs varies during the cycle, instantaneous comparison of two inputs is not possible unless at least one of the

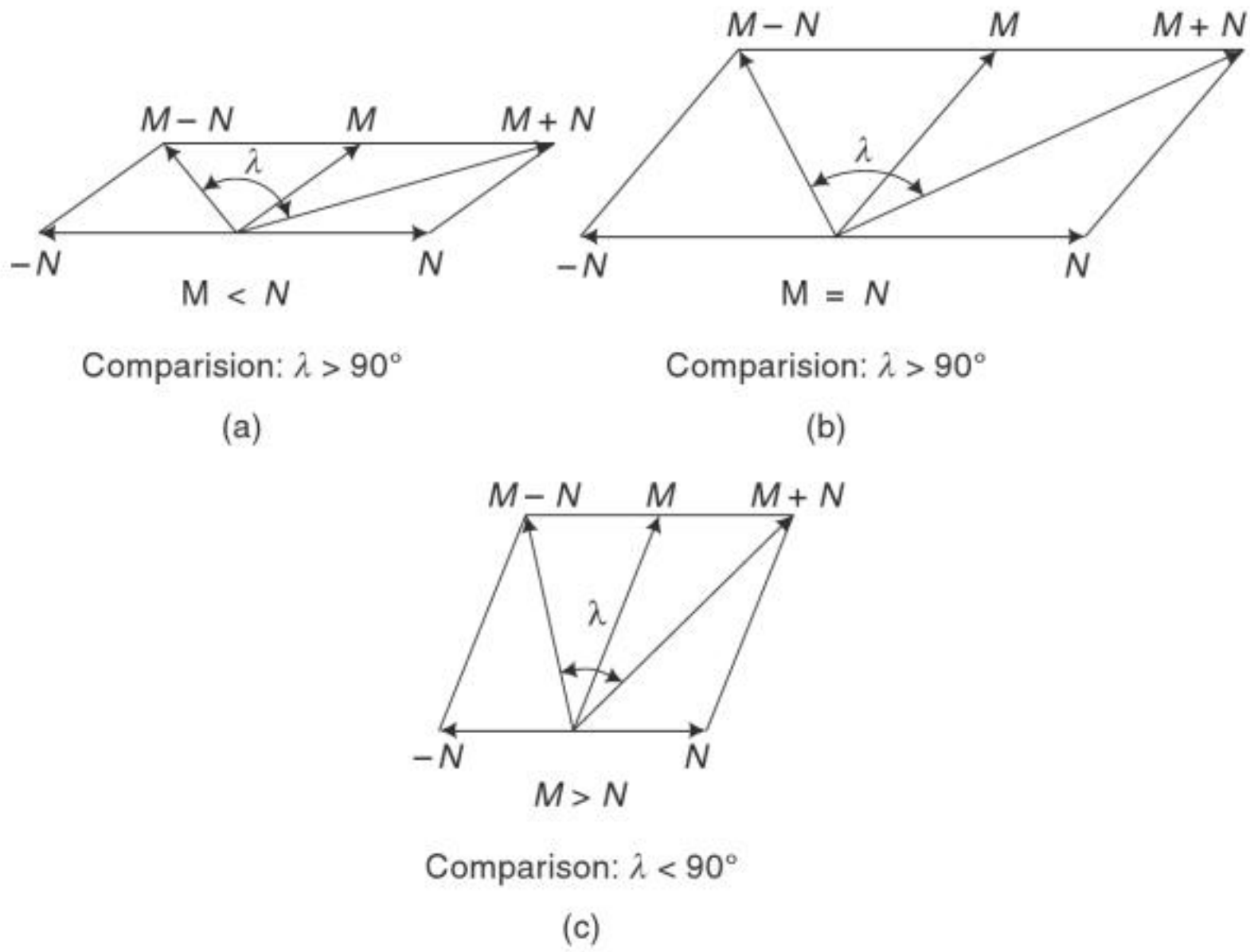

Fig. 2.22 *Phase comparator used for amplitude comparison*

signals is rectified. There are various techniques to achieve instantaneous comparison. In some techniques both inputs are rectified, while in some methods, only one of the inputs is rectified. When only one input signal is rectified, the rectified quantity is compared with the value of the other input at a particular moment of the cycle. Besides instantaneous (or direct) comparison, the integrating technique is also used.

The amplitude comparison can be done in a number of different ways. The following are some important methods which will be described to illustrate the principle.

(i) Circulating current type rectifier bridge comparators
(ii) Phase splitting type comparators
(iii) Sampling comparators.

Rectifier Bridge Type Amplitude Comparator

The rectifier bridge type comparators are widely used for the realisation of overcurrent and distance relay characteristics. The operating and restraining quantities are rectified and then applied to a slave relay or thyristor circuit. Figure 2.23(a) shown a rectifier bridge type amplitude comparator. There are two full wave rectifiers, one for the operating quantity and the other for the restraining quantity. The outputs of these bridges are applied to a dc polarised relay. When the operating quantity exceeds the restraining quantity, the relay operates. Figure 2.23(b) shows a rectifier bridge type amplitude comparator with the thyristor circuit as an output device.

To get more accurate results the bridge rectifier can be replaced by a precision rectifier employing an operational amplifier. The circuit for the precision rectifier has been discussed while describing microprocessor based relays.

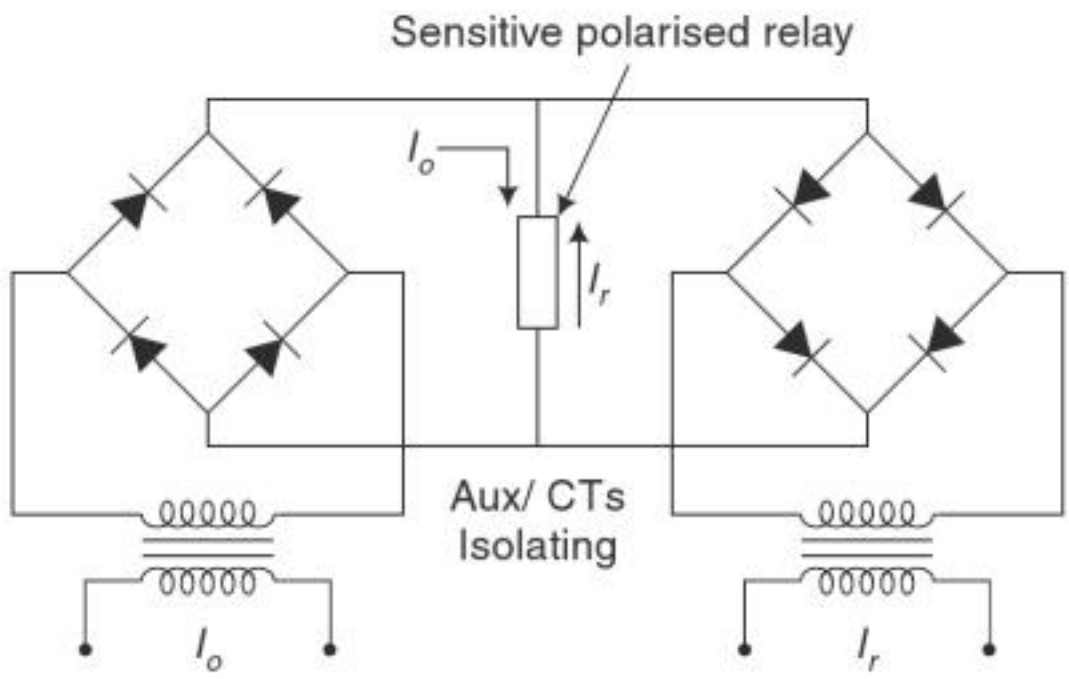

(a) With slave relay

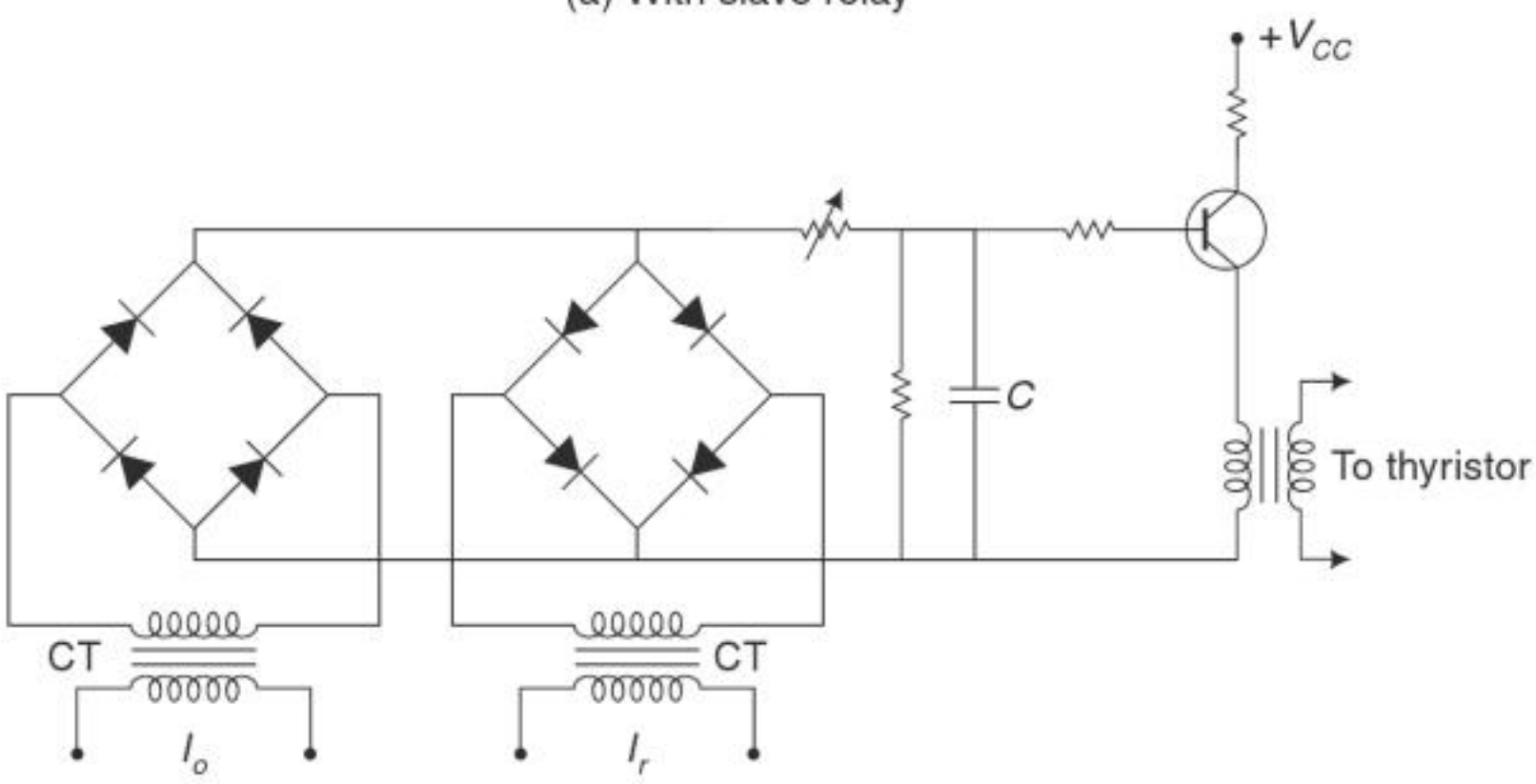

(b) With thyristor circuit

Fig. 2.23 *Rectifier bridge type amplitude comparator*

Phase Splitting Type Amplitude Comparators

Figure 2.24 shows a phase splitting of inputs before rectification. The input is split into six components 60° apart, so that output after rectification is smoothed within 5%.

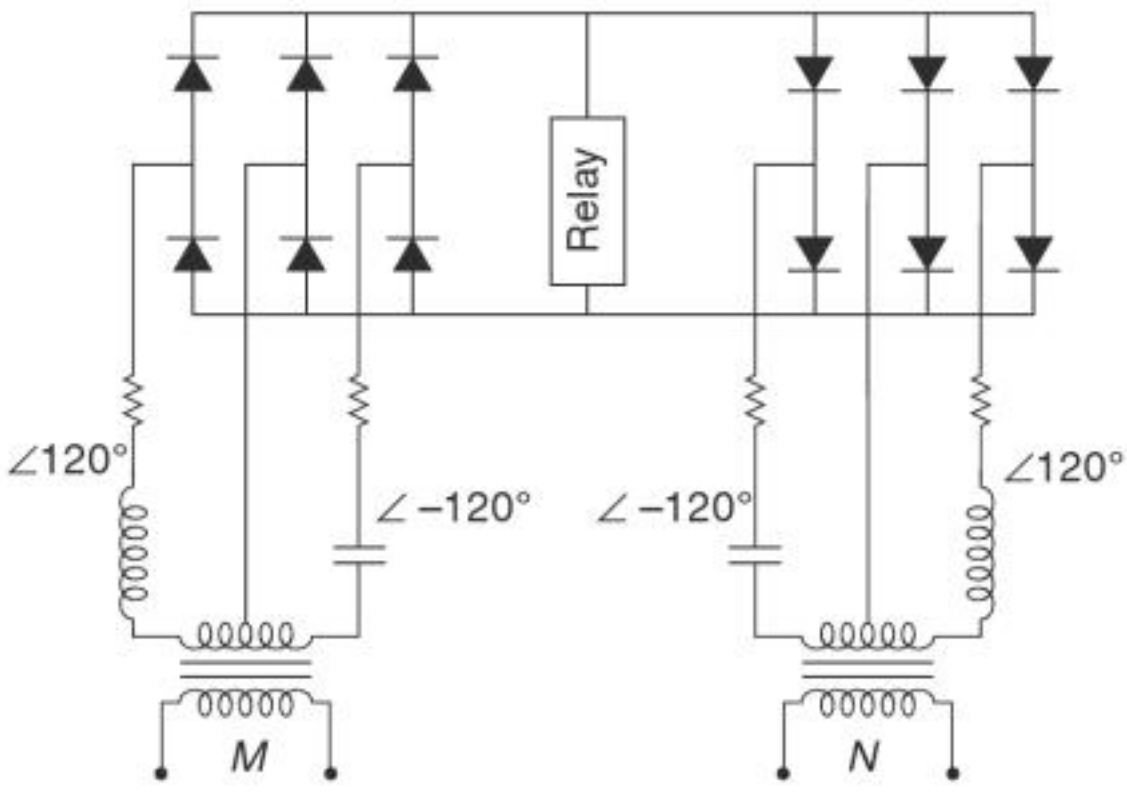

Fig. 2.24 *Phase splitting type amplitude comparator*

As both input signals to the relay are smoothed out before they are compared, a continuous output signal is obtained. The operating time depends on the time constant of the slowest arm of the phase-splitting circuit and the speed of the output device.

Sampling Comparators

In sampling comparators, one of the inputs is rectified and it is compared with the other input at a particular moment. The instantaneous value of the other input is sampled at a particular desired moment. Such comparators are used to realise reactance and MHO relay characteristics as discussed in Chapter 6 Section 6.7.1 and 6.7.2.

2.3.5 Types of Phase Comparators

Phase comparison can be made in a number of different ways. Some important techniques are described below.

(i) Vector product phase comparators

(ii) Coincidence type phase comparators.

(i) Vector Product Phase Comparators

In these comparators, the output is proportional to the vector product of the ac input signals. The Hall effect phase comparator and magneto-resistivity phase comparator come under this category of phase comparators.

Hall effect phase comparator

Hall effect is utilised to realise this phase comparator. Indium antimonide (InSb) and indium arsenide (InAs) have been found suitable semiconductors for this purpose. Of which indium arsenide is considered better. Protective relays based on Hall effect have been used mainly in the USSR only. These devices have low output, high cost and they can cause errors due to rising temperatures.

Magneto-resistivity

Some semiconductors exhibit a resistance variation property when subjected to a magnetic field. Suppose two input signals are V_1 and V_2. V_1 is applied to produce a magnetic field through a semiconductor disc. V_2 sends a current through the disc at a right angle to the magnetic filed. The current flowing through the disc is proportional to $V_1 V_2 \cos \phi$, where ϕ is the phase angle between the two voltages. Therefore, this can be used as a phase comparator. This device is considered to be better than the Hall effect type comparator because it gives a higher output, its construction and circuitry are simpler and no polarising current is required. This device is also used only in the USSR.

(ii) Coincidence Circuit Type Phase Comparators

In a coincidence circuit type phase comparator, the period of coincidence of positive polarity of two input signals is measured and compared with a predetermined angle, usually 90°. Figure 2.25 shows the period of coincidence represented by an angle ψ. If the two input signals have a phase difference of ϕ, the period of coincidence $\psi = 180 - \phi$. If ϕ is less than 90°, ψ will be greater than 90°. The relay is required to trip when ϕ is less than 90°, i.e. $\psi > 90°$. Thus, the phase comparator circuit is designed to trip signal when ψ exceeds 90°.

Copyrighted material

You have either reached a page that is unavailable for viewing or reached your viewing limit for this book.

You have either reached a page that is unavailable for viewing or reached your viewing limit for this book.

Figure 2.27(d) and (e) show the outputs of the AND gate and the integrator, respectively. This situation is for $\psi = 90°$ and is the limiting condition. The relay may be set to operate at $\psi = 90°$.

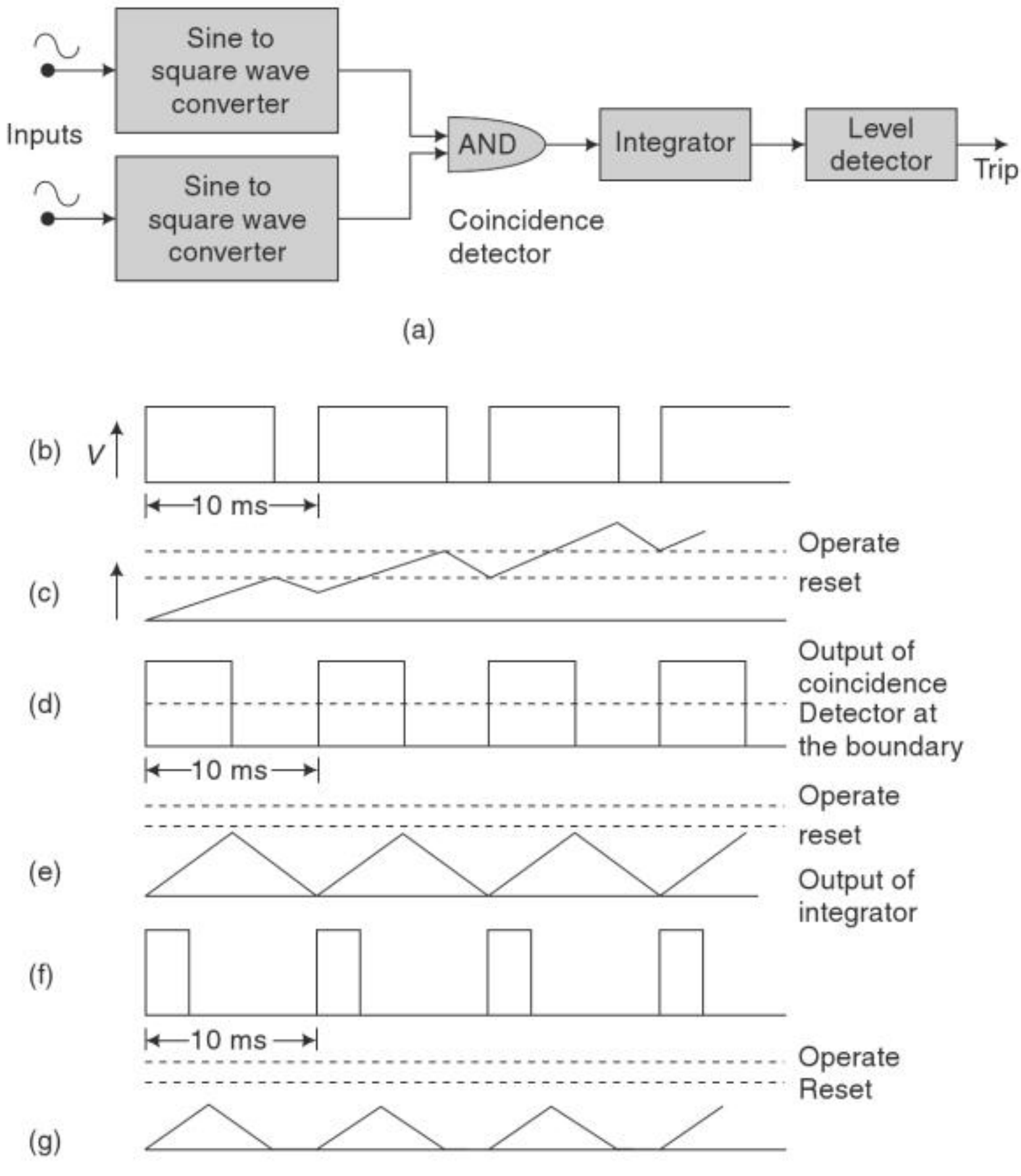

Fig. 2.27 *Integrating type phase comparator*

Figure 2.27(f) and (g) show the outputs of the AND gate and the integrator, respectively, for $\psi < 90°$. For this condition, the relay does not operate.

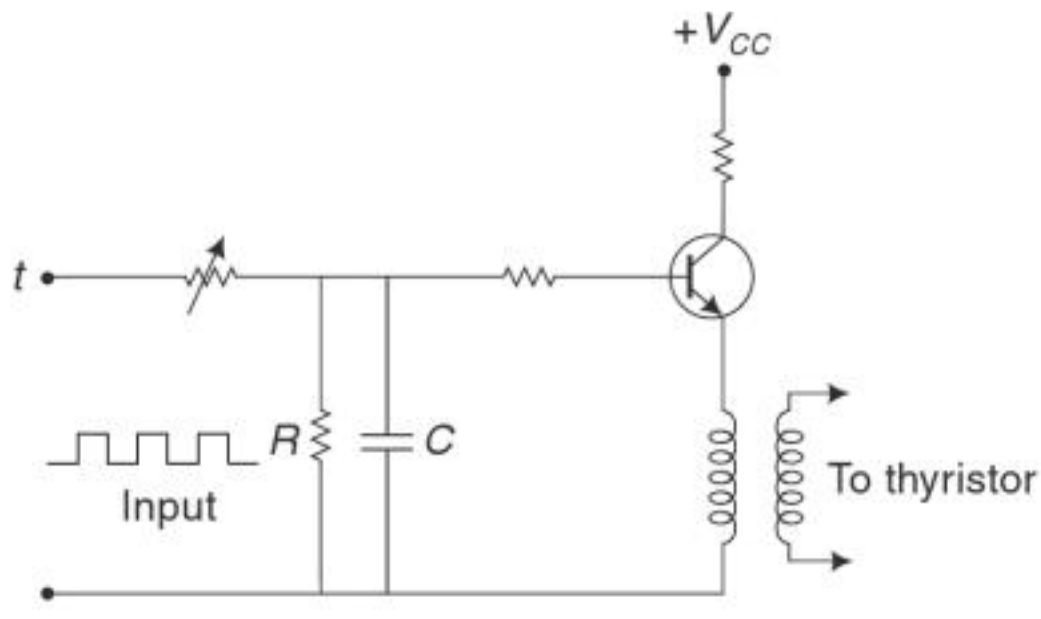

Fig. 2.28 *Integrating circuit*

You have either reached a page that is unavailable for viewing or reached your viewing limit for this book.

You have either reached a page that is unavailable for viewing or reached your viewing limit for this book.

You have either reached a page that is unavailable for viewing or reached your viewing limit for this book.

2.5 COMPARISON BETWEEN ELECTROMECHANICAL RELAYS AND NUMERICAL RELAYS

Sr. No.	*Feature*	*Electromechanical Relay*	*Numerical Relay*
1.	Size	Bigger	Compact
2.	Characteristics	Fixed	Selectable
3.	Flexibility	No flexibility	Flexibility due to programmability.
4.	Communication feature	Not available	Available
5.	Blocking feature	Not available	Available
6.	Self-supervision	Not available	Available
7.	Adaptability	Not adaptable	Adaptable to changing system condition.
8.	Multiple-functions	Not possible	Possible
9.	Accuracy	± 5% or more	± 2%
10.	Speed of operation	Slow	Fast
11.	Burden on Transducers (CTs and VTs)	Very high	Extremely low
12.	Consistancy of calibration	Deteriorate with time	No effect on calibration even after use of 20-25 years
13.	Setting	Through plug setting in fix steps.	Software based settings.
14.	Memory feature	No memory of any type is available.	Several memory features are available.
15.	Maintenance	Cumbersome and frequent maintenance required.	Maintenance free relays
16.	Output relay programming	Not available	Available
17.	Accessibility of relay from remote place	Not possible	Remote accessibility is available
18.	Status of service values	Not available	Available
19.	Safety of personnel	Not adequate due to non-accessibility at remote location.	Adequate safety is provided.
20.	Spares requirement	There is need to stock several items as spare.	Universal designs minimise the spares requirement.
21.	Upward connectivity for a present or future system such as SCADA, EMS etc.	Not possible	Possible

Copyrighted material

You have either reached a page that is unavailable for viewing or reached your viewing limit for this book.

You have either reached a page that is unavailable for viewing or reached your viewing limit for this book.

You have either reached a page that is unavailable for viewing or reached your viewing limit for this book.

voltage tends to collapse. The fault current is abnormal and may be 20 to 50 times the full-load current. It may have dc offset in addition to ac component. The fault current for a CT secondary of 5A rating could be 100 to 250 A. Therefore, the CT secondary having a continuous current rating of 5A should have short-time current rating of 100 to 250 A, so that the same is not damaged. Since the ac component in the fault current is of paramount importance for the relays, the protective CT should correctly reproduce it on the secondary side in spite of the dc offset in the primary winding. Hence the dc offset should also be considered while designing the protective CT. The protective CT should not saturate upto 20 to 50 times full-load current.

3.2.2 Core Material of CTs

Figure 3.1 shows the magnetisation Characteristics of (a) cold-rolled grain-oriented silicon steel (3%), (b) hot-rolled silicon steel (4%) and (c) nickel-iron (77% Ni, 14% Fe). It is seen that the nickel-iron core has the qualities of highest permeability, low exciting current, low errors and saturation at a relatively low flux density. Measuring CTs are required to give a high accuracy for all load currents up to 125% of the rated current. Nickel-iron gives a good accuracy up to 5 times the rated current and hence, it is quite a suitable core material for CTs used for meters and instruments. The excessive currents being fed to instruments and meters are prevented during faults on power system due to almost absolute saturation at relatively low flux density.

Cold-rolled grain-oriented silicon steel (3%), which has a high permeability, high saturation level, reasonably small exciting current and low errors is used for the core of the CTs used for protective relays. Such core material has reasonably good accuracy up to 10-15 times the rated current, but when we consider currents that are five times under the rated current, the core material made from nickel-iron alloy fares batter.

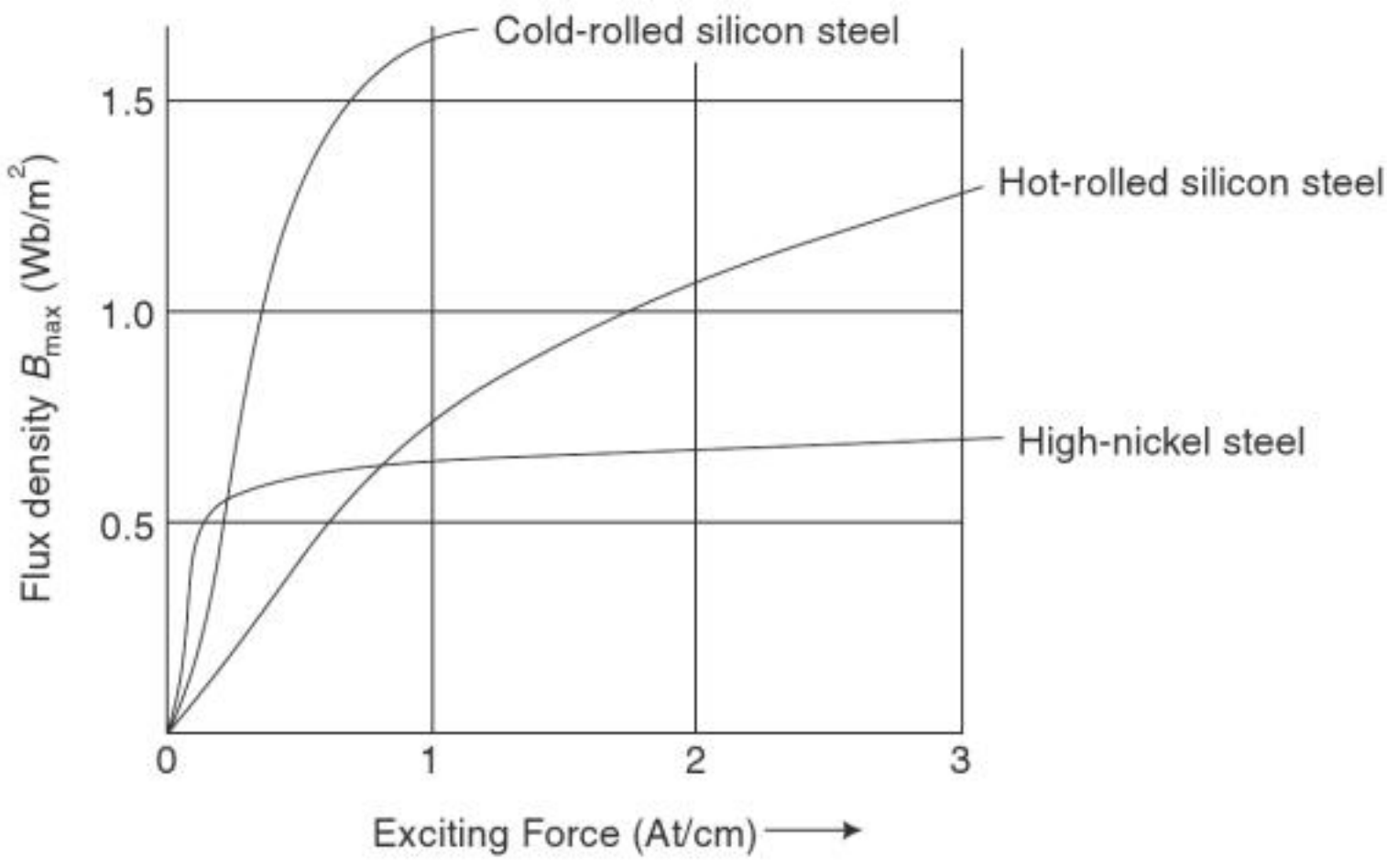

Fig. 3.1 *Magnetisation characteristics of CT cores*

Hot-rolled silicon steel has the lowest permeability. So it is not suitable for CTs. In order to achieve the desired characteristics, composite cores made of laminations of two or more materials are also used in CTs.

You have either reached a page that is unavailable for viewing or reached your viewing limit for this book.

You have either reached a page that is unavailable for viewing or reached your viewing limit for this book.

You have either reached a page that is unavailable for viewing or reached your viewing limit for this book.

(xiv) Rated primary saturation current The maximum value of primary current at which the required accuracy is maintained

(xv) Rated saturation factor The ratio of rated primary saturation current to rated primary current.

3.2.5 Theory of Current Transformers

Conventional electromagnetic current transformers (CTs) are single primary and single secondary magnetically coupled transformers. Hence, their performance can be analysed from and equivalent circuit commonly used in the analysis of transformers. The equivalent circuit of CT as viewed from secondary side is shown in Fig. 3.3. It is convenient to put the exiting shunt circuit on the secondary side and to refer all quantities to that side, so that I'_p denotes the primary current referred to the secondary side. The exciting current I_0 is deducted from I'_p to excite the core and induce voltage E_s which circulates current I_s.

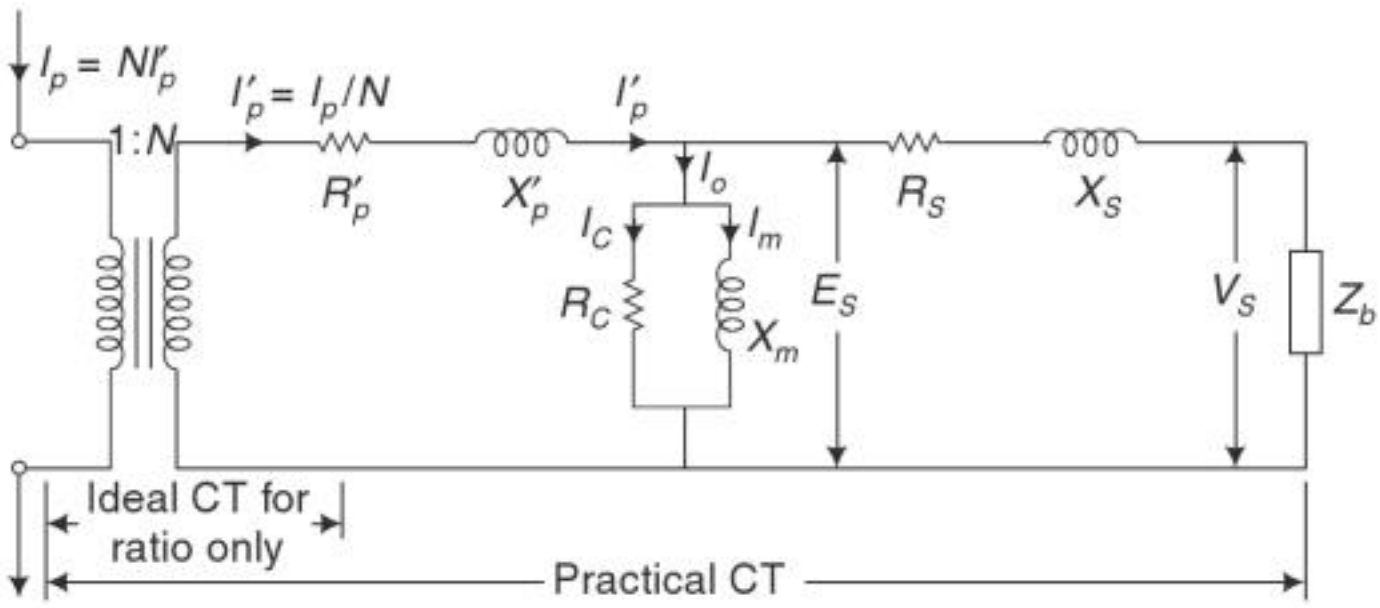

Fig. 3.3 *Equivalent circuit of CT as viewed from secondary side*

An ideal (perfect) transformer shown in Fig. 3.3 is to provide the necessary ratio change, it has no loss or impedance. All the quantities are referred to the secondary side. In an ideal CT, the primary ampere-turns (AT) is exactly equal in magnitude to the secondary AT and is in precise phase opposition to it. But in practical (actual) CTs errors are introduced both in magnitude and in phase angle. These errors are known as ratio error and phase angle error. The exciting current I_0 is the main source of these errors. Practical CTs do not reproduce the primary currents exactly in magnitude and phase due to these errors.

The errors of practical CTs can best be considered through the study of the phasor diagram shown in Fig. 3.4

In the equivalent circuit of Fig. 3.3 and phasor diagram of Fig. 3.4,

N = Nominal (rated) transformation ratio or Nominal (rated) CT ratio

$$= \frac{\text{Rated primary current}}{\text{Rated secondary current}} = \frac{\text{Number of secondary turns}}{\text{Number of primary turns}}$$

R_p, X_p = Primary resistance and leakage reactance respectively.

R_s and X_s = secondary resistance and leakage reactance

R'_p and X'_p = Primary resistance and leakage reactance as referred to the secondary side

You have either reached a page that is unavailable for viewing or reached your viewing limit for this book.

You have either reached a page that is unavailable for viewing or reached your viewing limit for this book.

You have either reached a page that is unavailable for viewing or reached your viewing limit for this book.

Ratio Error (Current Error)

The actual transformation ratio (N_a) is not equal to the rated (nominal) transformation ratio (N) since the primary current is contributed by the exciting current. The error introduced due to this difference in CT ratios is termed as ratio error or current error. The ratio error in percentage is expressed as

$$\text{Per cent ratio error} = \frac{\text{Nominal ratio} - \text{Actual ratio}}{\text{Actual ratio}} \times 100$$

$$= \frac{N - N_a}{N_a} \times 100$$

or $$\text{Per cent ratio error} = \frac{N - I_p/I_s}{I_p/I_s} \times 100$$

or $$\text{Per cent ratio error} = \frac{NI_s - I_p}{I_p} \times 100 \tag{3.14}$$

Where N = Nominal (rated) ratio

$$= \frac{\text{Rated primary current}}{\text{Rated secondary current}}$$

$$= \frac{\text{Number of secondary turns}}{\text{Number of primary turns}}$$

N_a = Actual ratio = $\dfrac{I_p}{I_s}$

I_p = Primary Current

I_s = Secondary current

I_p can be calculated by using Equation (3.7) and N_a by using Equation (3.9) or (3.10)

The ratio error is largely dependant upon the value of the iron-loss component I_c of the exciting current.

The ratio error is considered to be positive when the actual ratio of the CT is less than the nominal ratio, i.e., when the secondary current, for a given primary current, is high.

Phase-Angle Error

For a perfect (ideal) current transformer, the phase difference between the primary and reversed secondary phasors is zero. But for an actual transformer, there is always a difference in phase between the two phasors due to the fact that primary current has to supply the components of the exciting current. The phase difference between the primary current phasor and the reversed secondary current phasor is termed as the 'phase-angle error' of the CT. For sinusoidal current, it is said to be positive when the reversed secondary current phasor leads the primary current phasor. The phase angle error β can be calculated by using Equation (3.12) or (3.13).

The phase-angle error is largely dependant upon the value of the magnetizing component I_m of the exciting current.

Copyrighted material

You have either reached a page that is unavailable for viewing or reached your viewing limit for this book.

You have either reached a page that is unavailable for viewing or reached your viewing limit for this book.

You have either reached a page that is unavailable for viewing or reached your viewing limit for this book.

$$= -\left(\frac{Z_s I'_{pm}}{N_s \omega}\right) \tag{3.21}$$

For the transient component of i_s, and integrating from $t = 0$ to $t = \infty$

$$\phi_m = \left(\frac{1}{N_s}\right) Z_s I'_{pm} \int_{t=0}^{\infty} e^{-\left(\frac{R_p}{L_p}\right)t} dt$$

$$= \left(\frac{Z_s I'_{pm}}{N_s \omega}\right)\left(\frac{\omega L_p}{R_p}\right)$$

$$= \left(\frac{Z_s I'_{pm}}{N_s \omega}\right)\left(\frac{X_p}{R_p}\right) \tag{3.22}$$

Therefore, the component of the core flux due to the transient component of the fault current is X_p/R_p times the component of the core flux due to the steady-state component of the fault current. Considering the worst case of a fault near a large power station, X_p/R_p could be as high as 30, corresponding to a primary-circuit time constant of $L_p/R_P = 0.1$ s, or about 5 cycles.

Assuming that the two fluxes can be added numerically (the worst case), the total core flux is equal to the steady-state component multiplied by the factor

$$1 + \left(\frac{X_p}{R_p}\right) = 1 + \frac{2\pi f L_p}{R_p} = 1 + 2\pi T_p$$

where T_p is the primary circuit time-constant in cycles. The flux waveforms are shown in Fig. 3.6

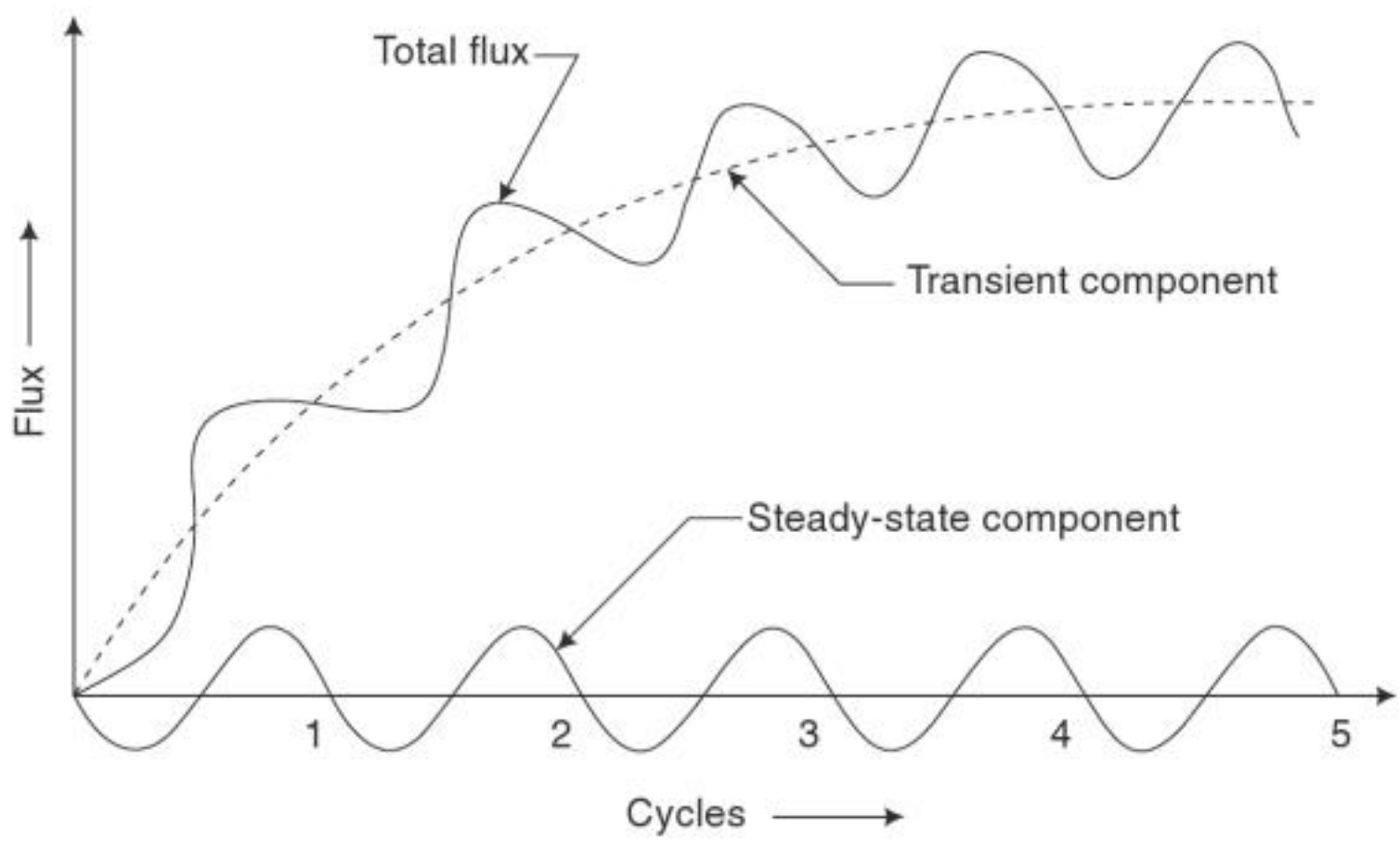

Fig. 3.6 *CT core fluxes during transient period*

The value of X_p/R_p increases with the system voltage because of the increased spacing of the conductors. The component of the core flux due to transient dc offset current increases X_p/R_p times the flux due to the symmetrical (steady-state) ac

You have either reached a page that is unavailable for viewing or reached your viewing limit for this book.

You have either reached a page that is unavailable for viewing or reached your viewing limit for this book.

You have either reached a page that is unavailable for viewing or reached your viewing limit for this book.

Opto-electronic CTs generate two linearly polarized light beams by sending light through a waveguide to a linear polarizer, then to a polarization splitter, and finally to an optical phase modulator. The two linearly polarized light beams are then applied to a polarizing retaining optical fiber that takes them to the "sensing head". A circular polarizer converts one beam to a left circularly polarized beam and the other to a right circularly polarized beam, as shown in Fig 3.8(a) and (b).

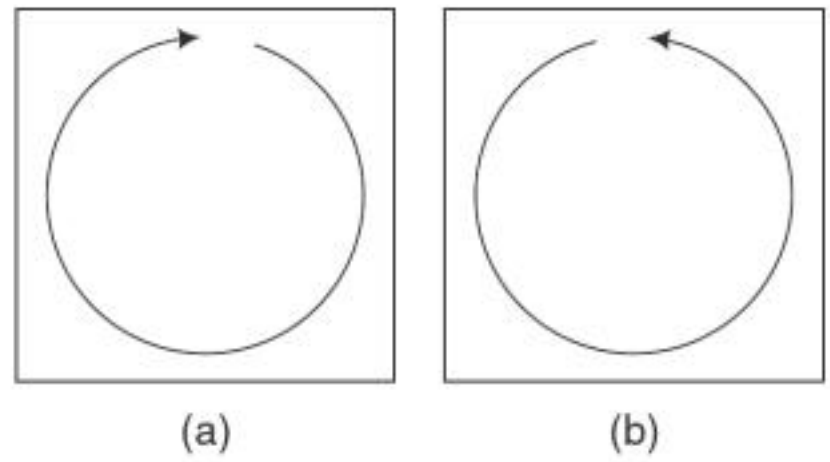

Fig. 3.8 *(a) Left polarized beam (b) Right polarized beam*

The circular polarized beams travel around the phase conductor many times. While encircling the conductor, the magnetic field induced by the current flowing in the conductor creates a differential optical phase shift between the two light beams due to the Faraday effect. As a result of this, one beam is accelerated and the other beam is decelerated. After having gone around the conductor many times, the beams are reflected by a mirror. The reflection changes the polarization, and as a result, the right polarized beam becomes a left polarized beam and the left polarized beam becomes a right polarized beam. The beams travel back around the conductor towards the polarizer. The travel on the return path further accelerates the accelerated beam and further decelerates the decelerated beam. The polarizer changes the circular polarizations to linear polarization.

When there is no current in the conductor, the beams are neither accelerated nor decelerated. In this case, the returning beams are in phase as shown in Fig. 3.9(a). When there is a current in the conductor, the acceleration of one beam and deceleration of the other beam manifests in a phase shift between the two beams as shown in Fig. 3.9(b).

The two light beams are finally routed to the optical detector where the electronics de-modulate them to determine the phase shift. The phase shift between the two light beams is proportional to current in the conductor. An analog or digital signal representing the current is provided by the electronics to the end user.

Opto-electronic CTs provide a reliable method of measuring very high fault currents with significant dc offsets without any type of saturation, as is understood with conventional electromagnetic CTs.

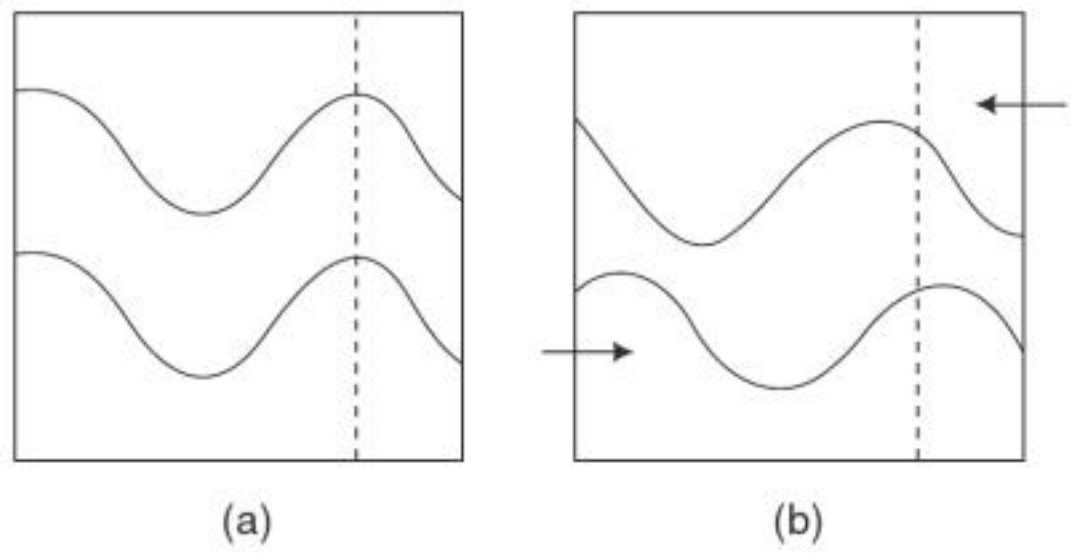

Fig. 3.9 (a) *Beams in phase (b) Acceration of one beam and deceleration of the other beam*

3.2.13 Rogowski Coil

A Rogowski Coil, named after Walter Rogowski, is an 'air-cored' toroidal coil of wire used for measuring alternating current (ac) or high frequency current pulses. It is the modern current sensor. It consists of a helical coil of wire with

You have either reached a page that is unavailable for viewing or reached your viewing limit for this book.

You have either reached a page that is unavailable for viewing or reached your viewing limit for this book.

You have either reached a page that is unavailable for viewing or reached your viewing limit for this book.

When in any application other than a standard ratio is required, an auxiliary CT is used to provide a convenient method of achieving the desired ratio. The auxiliary CT, however contributes to the overall errors of transformation. The possibility of auxiliary CT's saturation should be taken into account. In order to provide a variable turns ratio, auxiliary CTs with multiple taps are also available. The burden connected into the auxiliary CT secondary is reflected into the main CT secondary, according to the normal rules of transformation.

3.2.15 Flux-summing CT

Zero sequence current in a three-phase system can be obtained by using a single CT, if three phase conductors are passed through the window of a toroidal CT as shown in Fig. 3.14. In this case, the secondary current of the CT is proportional to $(I_a + I_b + I_c) = 3I_0$. The CT secondary contains the true zero-sequence current, because this arrangement effectively sums the flux produced by the three phase currents. Such a CT application is possible, if the three phase conductors may be passed through the CT core in close proximity to each other. Hence, such application of CT is possible only in low voltage circuits.

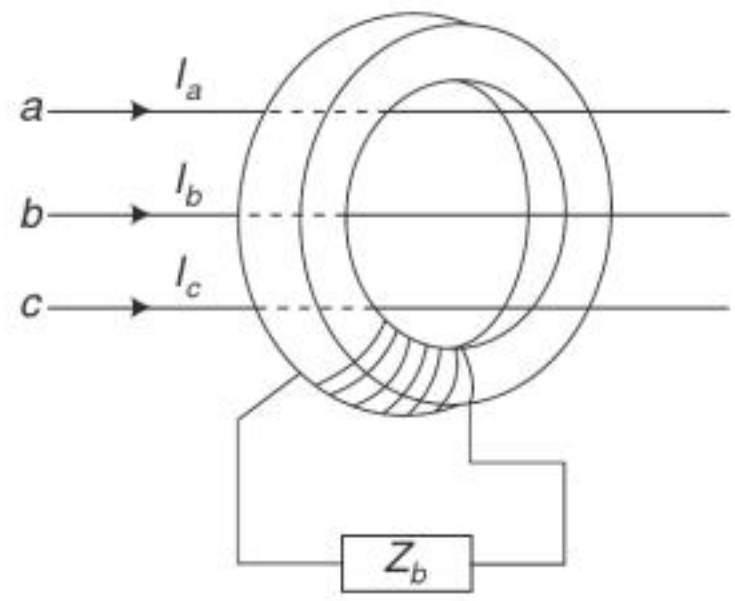

Fig. 3.14 *Flux summing CT*

3.2.16 High-Voltage CTs

High-voltage CTs of separately mounted post-type are suitable for outdoor service. They are installed in the outdoor switch yard. There are three basic forms of construction of these CTs as shown in Fig. 3.15(a), (b) and (c). In Type A, the cores and secondary windings are contained in an earthed tank at the base of a porcelain insulator and the leads of the fully insulated primary winding are taken up to the top helmet through the porcelain insulator. In Type B, the cores and windings are mounted midway inside the porcelain housing usually with half the major insulation on the primary winding and the other half on the secondary winding and cores. This form of construction is

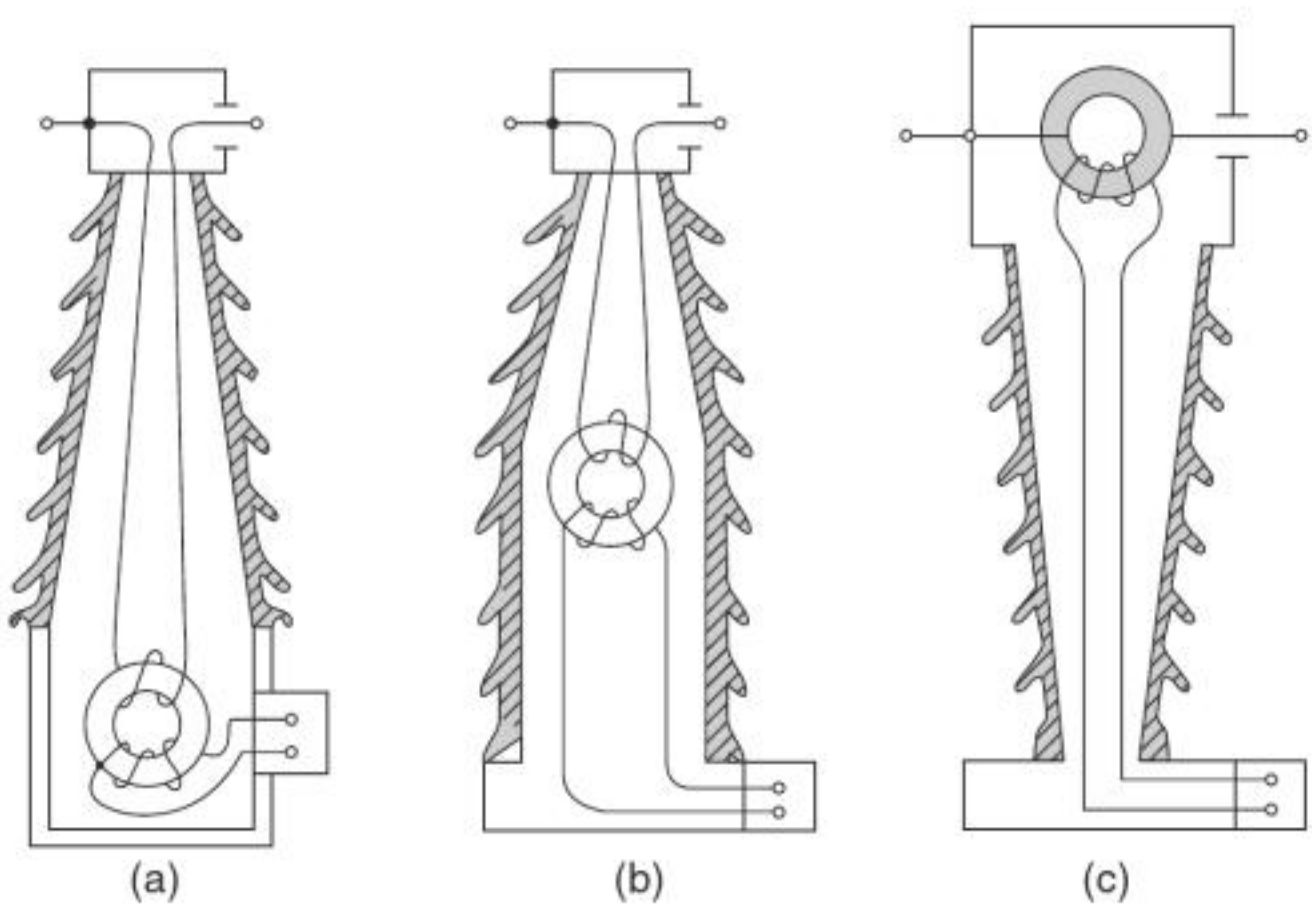

Fig. 3.15 *(a) Type A CT (b) Type B CT (c) Type C CT*

You have either reached a page that is unavailable for viewing or reached your viewing limit for this book.

You have either reached a page that is unavailable for viewing or reached your viewing limit for this book.

You have either reached a page that is unavailable for viewing or reached your viewing limit for this book.

The divergence of the actual (true) ratio V_p/V_s from nominal (rated) ratio K depends upon the resistance and reactance of the transformer windings as well as upon the value of the exciting current of the transformer.

Ratio Error (Voltage Error)

The ratio error for VTs is defined as the error due to a difference in the actual transformation ratio and the nominal (rated) transformation ratio.

In percentage, it is expressed as

$$\text{Percent ratio error} = \frac{\text{Norminal ratio} - \text{Actual ratio}}{\text{Actual ratio}} \times 100$$

$$= \frac{K - K_a}{K_a} \times 100 = \frac{K - V_p/V_s}{V_p/V_s} \times 100$$

or

$$\text{Percent ratio error} = \frac{KV_s - V_p}{V_p} \times 100 \tag{3.31}$$

where K = Nominal voltage ratio = $\dfrac{\text{Number of primary turns}}{\text{Number of secondary turns}}$

$K_a = \dfrac{V_p}{V_s}$ = Actual transformation ratio

V_s = Secondary voltage, and

V_p = Primary voltage

Phase Angle Error

The phase difference between the primary voltage and the reversed secondary phasors is the phase angle error of the VT. In order to keep the overall error within the specified limits of accuracy, the winding must be designed to have:

(i) the internal resistance and reactance to an appropriate magnitude, and

(ii) mininum magnetizing and loss components of the exciting current required by the core.

Limits of VT Errors for Protection

The accuracy of VTs used for meters and instruments is only important at normal system voltages, where as VTs used for protection require errors to be limited over a wide range of voltages under fault conditions. This may be about 5% to 150% of nominal voltage. The ratio error and phase angle error for VTs required for protection according to ISS : 3156 (Part III) 1966 are given in Table 3.2.

Table 3.2 Limits of Voltages and Phase Angle Errors for VTs

	0.05 to 0.9 times rated primary voltage *0.25 to 1.0 times rated output at unity p.f.*	
Class	*Ratio Error*	*Phase Angle Error (in Degrees)*
3.0	± 3%	2
5.0	± 5%	5

3.3.3 Type of VTs

Following are three types of voltage transformers.

(i) Electromagnetic type VTs

Copyrighted material

You have either reached a page that is unavailable for viewing or reached your viewing limit for this book.

You have either reached a page that is unavailable for viewing or reached your viewing limit for this book.

You have either reached a page that is unavailable for viewing or reached your viewing limit for this book.

$$I_{output} = K_0 I_0 + K_1 I_1 + K_2 I_2 \tag{3.34}$$

The constants K_0, K_1 and K_2 depend on the device which is used to derive a single-phase quantity from the 3-phase quantities.

The phase-sequence filter giving an output in the form of $I_1 - KI_2$ gives the most uniform response for any type of fault. The value of K may be 5 or 6. Fig. 3.20(b) shows a phase sequence filter of this type. Table 3.5 shows the values of constants for general type phase sequence network and $I_1 - KI_2$ type phase-sequence filter.

Table 3.5 Value of Constants K_0, K_1 and K_2, output of phase-sequence filter

Type of Faults	*Any Summation Device*			*$(K_1 - KI_2)$ Type Device*
	K_0	K_1	K_2	Output
R-G, Y-B, Y-B-G	K_Z	K_p	K_N	$I_1 - KI_2$
Y-G, B-R, B-R-G	K_Z	aK_P	a^2K_N	$aI_1 - a^2KI_2$
B-G, R-Y, R-Y-G	K_Z	a^2K_P	aK_N	$a^2I_1 - aKI_2$

K = 5 or 6
K_z = constant for zero-sequence component
K_P = Constant for +ve sequence component
K_N = Constant for –ve sequence component

EXERCISES

1. What are transducers? Why are they required in protection systems?
2. Explain the difference between a CT used for instrumentation and CT used for protection.
3. Explain CT burden. How is it specified?
4. Discuss how saturation affects the accuracy of CTs. Explain the accuracy limit factor or saturation factor.
5. Define the terms: (i) Rated short-time current (ii) Short-time factor (iii) Composit error (iv) Knee point voltage (v) Rated short-circuit current
6. Discuss the theory of CT with the help of equivalent circuit and phasor diagram and derive the expressions for actual transformation ratio and phase angle error.
7. Discuss the causes of ratio and phase angle errors in CTs. How can these errors be minimized?
8. What do you mean by ratio correction factor in CTs? Derive an expression for the same.
9. Discuss the various classification of CTs. Describe the construction of electro-magnetic CTs.
10. What is an opto-electronic CT? Discuss its operation.
11. What is Rogowski coil current sensor? Describe its construction and operation and derive the expression for the voltage induced. How can the voltage proportion to the current be obtained?
12. Describe the characteristics of the Rogowski coil current sensor.
13. What is an auxiliary CT? Where is it used?
14. What is a linear coupler? Where is it used?
15. Discuss the different types of VTs with their areas of application.
16. What is a summation transformer? Where is it used?

Copyrighted material

You have either reached a page that is unavailable for viewing or reached your viewing limit for this book.

You have either reached a page that is unavailable for viewing or reached your viewing limit for this book.

You have either reached a page that is unavailable for viewing or reached your viewing limit for this book.

phase systems, the base values usually chosen are three phase kVA or MVA and line-to-line voltage in kV. For power networks containing transformers, it is convenient to select the same power (kVA or MVA) base for both the sides but the ratio of base voltages on the two sides is kept same as the transformation ratio. Such a selection gives the same per-unit impedance on both sides of the transformer.

Therefore, for per-unit calculations involving transformers in three-phase circuits, the base voltages on the two sides of the transformer have the same ratio as the rated line-to-line voltages on the two sides of the transformer and the kilovoltampere (kVA) or megavoltampere (MVA) base remains the same on both the sides.

In a power system, voltage, current, apparent power (VA, kVA or MVA) and impedance are so related that selection of base values for any two of them determines the base values of the remaining two quantities.

4.2.1 Base and Per-Unit Values in a Single-Phase System

Let the selected base quantities be as follows:

$$\text{Base } VA = (VA)_b$$

$$\text{Base voltage} = V_b \text{ Volts}$$

Then,

$$\text{Base current } I_b = \frac{(VA)_b}{V_b} A \tag{4.1}$$

$$\text{Base impedance } Z_b = \frac{V_b}{I_b} = \frac{V_b^2}{(VA)_b} \text{ ohms} \tag{4.2}$$

If the actual impedance is Z (ohms), its per-unit value is given by

$$Z_{\text{pu}} = \frac{Z}{Z_b} = \frac{Z \times (VA)_b}{V_b^2} \tag{4.3}$$

For a power system, the practical choice of base values are:

$$\text{Base kVA} = (\text{kVA})_b$$

or

$$\text{Base MVA} = (\text{MVA})_b$$

$$\text{Base Voltage in kV} = (\text{kV})_b$$

Then, base values for current and impedance, and per-unit values can be calculated as follows:

$$\text{Base current } I_b = \frac{(\text{kVA})_b}{(\text{kV})_b} = \frac{(\text{MVA})_b \times 10^3}{(\text{kV})_b} \text{ A} \tag{4.4}$$

$$\text{Base impedance } Z_b = \frac{(\text{kV})_b \times 10^3}{I_b}$$

$$= \frac{(\text{kV})_b^2 \times 10^3}{(\text{kVA})_b} = \frac{(\text{kV})_b^2}{(\text{MVA})_b} \text{ ohms} \tag{4.5}$$

$$\text{Per-unit impedance } Z_{pu} = \frac{Z \text{ (ohms)}}{Z_b \text{ (ohms)}}$$

Copyrighted material

You have either reached a page that is unavailable for viewing or reached your viewing limit for this book.

You have either reached a page that is unavailable for viewing or reached your viewing limit for this book.

You have either reached a page that is unavailable for viewing or reached your viewing limit for this book.

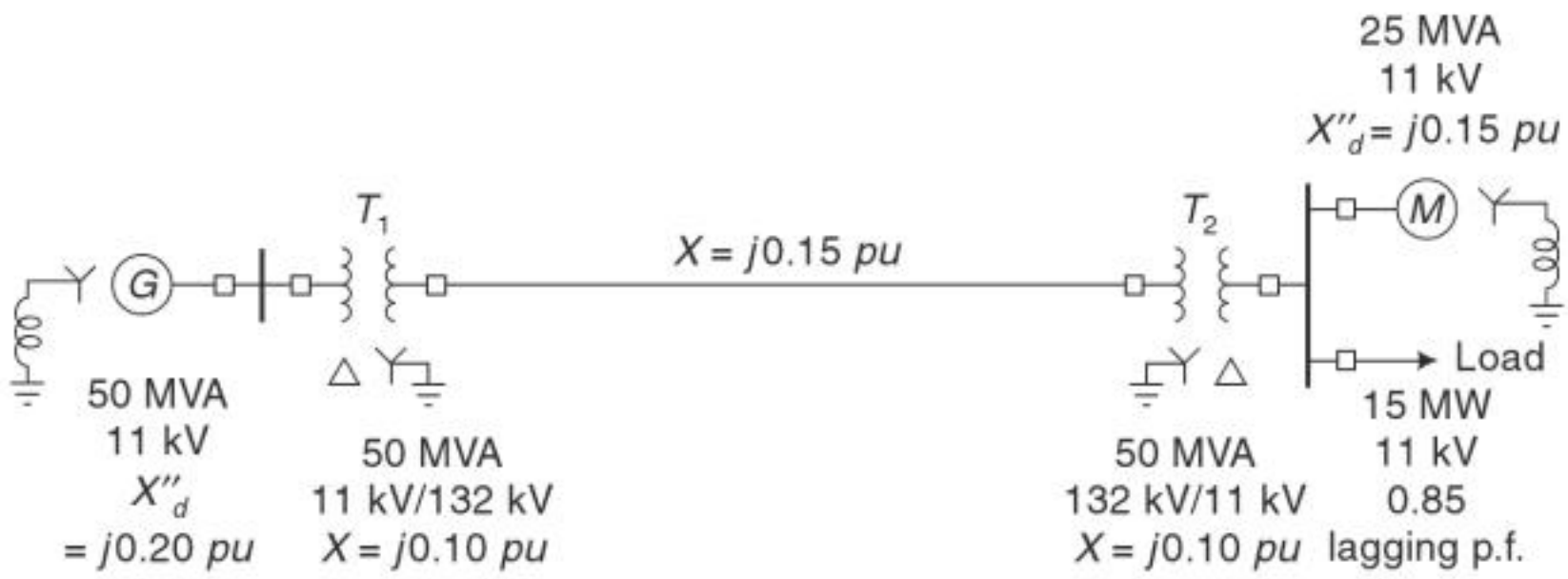

Fig. 4.1 *One-line diagram of a simple power system.*

4.4 IMPEDANCE AND REACTANCE DIAGRAMS

In order to analyze a power system under load conditions or upon the occurrence of a fault, it is essential to draw the per-phase equivalent circuit of the system by using its one-line diagram. The equivalent circuit of the system drawn by combining the equivalent circuits for the various components shown in the one-line diagram is known as the impedance diagram of the system. A generator is represented by an emf in series with an impedance. Transformers and motors are represented by their equivalent circuits. A short line is represented by its series impedance. Medium and long lines are represented by nominal Π circuits, whereas very long lines are represented by equivalent Π circuits. The shunt admittance is usually omitted in the equivalent circuit of the transformer because the magnetizing current of a transformer is usually insignificant compared with the full load current. Since the resistance of a system is very small as compared to its inductive reactance, the resistance is often omitted when making fault calculations. Static loads (i.e., the loads which do not involve rotating machines) have little effect on the total line current during a fault and are usually omitted. Since the generated emfs of synchronous motor loads contribute to the fault current, they are always included in making fault calculations. If the impedance diagram is to be used to determine the current immediately after the occurrence of a fault, the induction motors are taken into account by a generated emf in series with an inductive reactance. Induction motors are omitted in computing the current a few cycles after the occurrence of the fault because the current contributed by an induction motor dies out very quickly after the induction motor gets short circuited.

Static loads are neglected during fault, as voltages dip very low so that currents drawn by them are negligible in comparison to fault currents. If all static loads, all resistances, the shunt admittance of each transformer, and the capacitance of the transmission line are neglected in order to simplify the calculation of the fault current, the impedance diagram reduces to the reactance diagram. These simplifications are applicable to fault calculations only and not to load-flow studies. Since the impedance and reactance diagrams show impedances to balanced currents in a symmetrical three-phase system, they are sometimes called the positive-sequence diagrams. The values of impedances and reactances in the impedance and reactance

You have either reached a page that is unavailable for viewing or reached your viewing limit for this book.

You have either reached a page that is unavailable for viewing or reached your viewing limit for this book.

You have either reached a page that is unavailable for viewing or reached your viewing limit for this book.

220 kV and 132 kV respectively and the line to line base voltage of the synchronous motor circuit is 11 kV.

For fault calculations, static load of 40 MW is neglected in the impedance diagram.

The per-unit reactances of various components on the common MVA base of 200 MVA are calculated below:

$$\text{Generator } G : 0.20 \times \frac{200}{200} = 0.20\ pu$$

$$\text{Transformer } T_1 : 0.12 \times \frac{200}{100} = 0.24\ pu$$

$$\text{Transformer } T_2 : 0.10 \times \frac{200}{100} = 0.20\ pu$$

$$\text{Transformer } T_3 : 0.10 \times \frac{200}{100} = 0.20\ pu$$

$$\text{Transformer } T_4 : 0.08 \times \frac{200}{100} = 0.16\ pu$$

$$\text{Synchronous Motor } M : 0.18 \times \left(\frac{200}{60}\right) \times \left(\frac{10.5}{11}\right)^2 = 0.546\ pu$$

$$\text{Line 1} : \frac{40 \times 200}{(220)^2} = 0.165\ pu$$

$$\text{Line 2} : \frac{55 \times 200}{(132)^2} = 0.631\ pu$$

The per-unit impedance diagram of the system is shown in Fig. 4.6

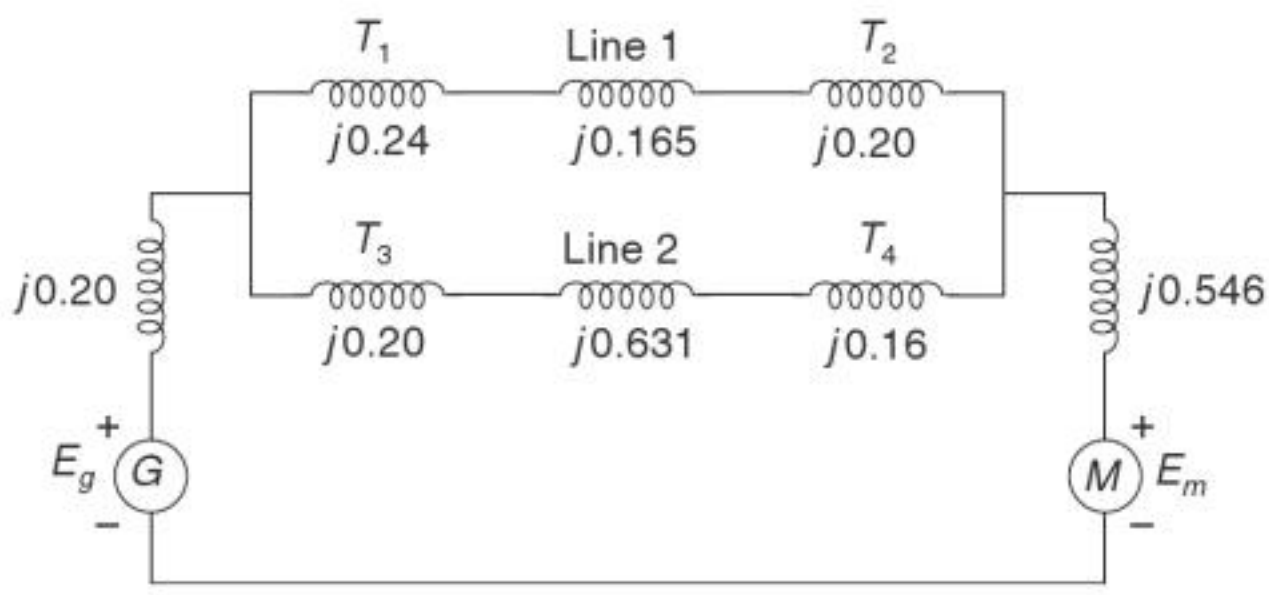

Fig. 4.6 *Per-unit impedance (reactance) diagram of the system of Fig. 4.5*

4.5 SYMMETRICAL FAULT ANALYSIS

Symmetrical fault is defined as the simultaneous short circuit across all the three phases. This type of fault may involve ground or may not involve ground. Though this fault is very infrequent in occurrence, but it is the most severe type of fault which gives rise to the maximum fault current. Under symmetrical fault condition, the three-phase system behaves like a balanced circuit and can be analyzed on a

You have either reached a page that is unavailable for viewing or reached your viewing limit for this book.

You have either reached a page that is unavailable for viewing or reached your viewing limit for this book.

You have either reached a page that is unavailable for viewing or reached your viewing limit for this book.

[Fig. 4.7(b)] in the middle period of the short circuit, and finally to X_a in steady state as shown in Fig. 4.7(c)

During the initial period of the short circuit, the reactance presented by the machine is given by:

$$X_l + \frac{1}{(1/X_a + 1/X_f + 1/X_{dw})} = X''_d \tag{4.18}$$

X''_d is called subtransient reactance (direct-axis subtransient reactance in the case of salient pole machines).

The effective reactance after the damper winding currents have died out is given by:

$$X_l + \frac{1}{(1/X_a + 1/X_f)} = X'_d \tag{4.19}$$

X'_d is called the transient reactance (direct-axis transient reactance in the case of salient pole machines) under steady-state conditions, the reactance is the synchronous reactance X_d of the machine. The values of X''_d, X'_d and X_d are such that $X''_d < X'_d < X_d$. Thus, under short circuit conditions, the machine offers a time-varying reactance which changes from X''_d to X'_d and finally to X_d.

The symmetrical trace of a short-circuited stator-current wave is shown in Fig. 4.8. This wave may be divided into three-periods or time regimes namely the subtransient period, lasting only for the first few cycles, during which the current-decrement is very rapid; the transient period, covering a relatively longer time during which the current decrement is more moderate; and finally the steady-state period. During subtransient period, the current is large as the machine offers subtransient reactance, during the middle transient period the machine offers transient reactance, and finally the steady-state period when the machine offers synchronous reactance.

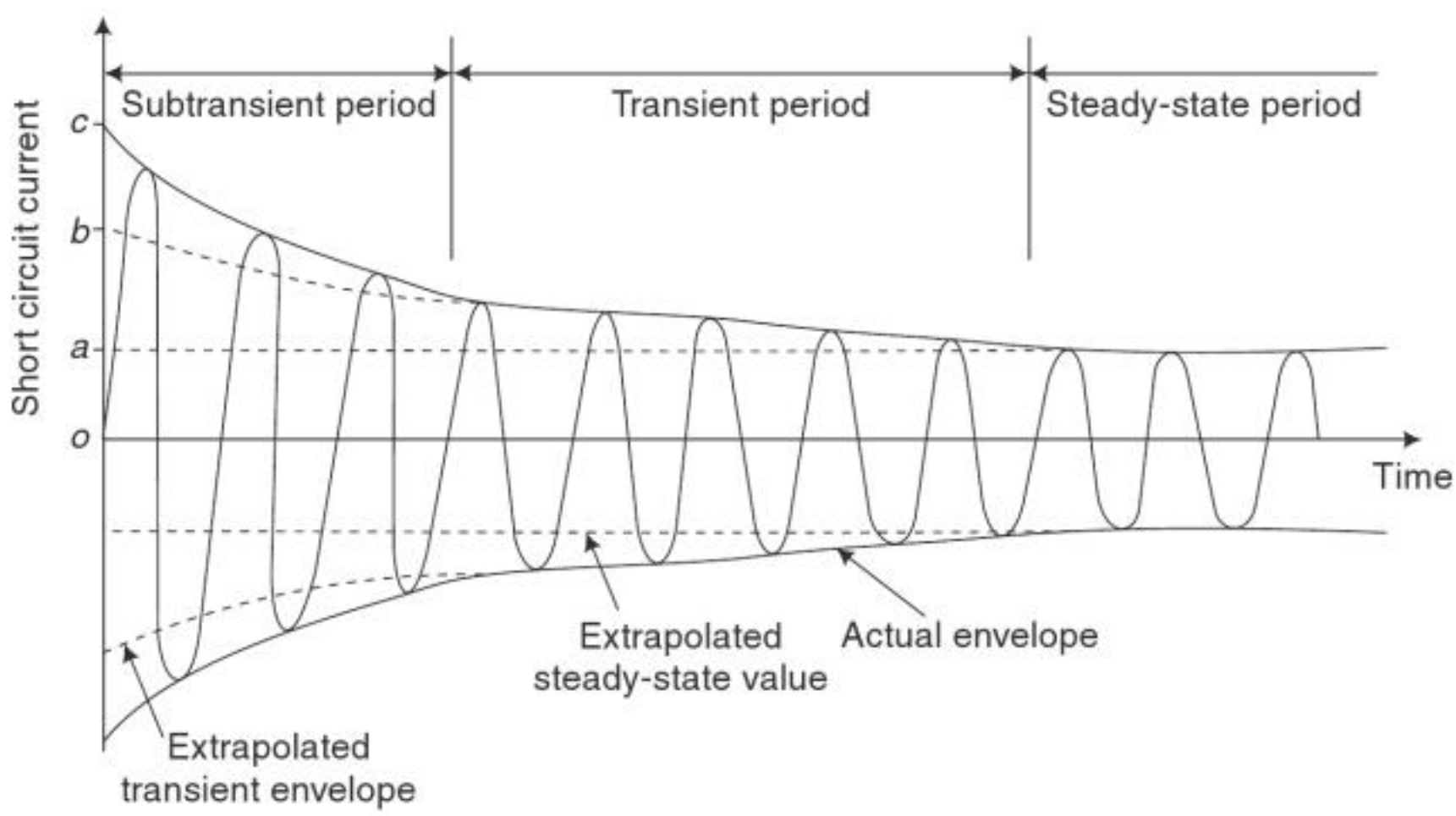

Fig. 4.8 *Symmetrical short-circuit stator current in synchronous machine.*

The envelope of the current wave shape is shown in Fig. 4.9. when the transient envelope is extrapolated backwards in time, the difference $\Delta i''$ between the

You have either reached a page that is unavailable for viewing or reached your viewing limit for this book.

You have either reached a page that is unavailable for viewing or reached your viewing limit for this book.

You have either reached a page that is unavailable for viewing or reached your viewing limit for this book.

From the current viewpoint, the following two factors are to be considered in selecting the circuit breaker.

(i) The maximum instantaneous current which the circuit breaker must carry (withstand) and

(ii) The total current when the circuit-breaker contacts part to interrupt the circuit.

Two of the circuit-breaker ratings which require the computation of the fault current are: rated momentary current and rated interrupting current. Symmetrical momentary fault current is obtained by using subtransient reactances for synchronous machines. The current which a circuit-breaker must interrupt is usually asymmetrical since it contains the decaying dc component (dc offset current). The asymmetrical momentary fault current is calculated by multiplying the symmetrical momentary fault current by a factor of 1.6 to account for the presence of dc offset current.

The interrupting MVA rating of a circuit-breaker equals $\sqrt{3}$ × (the kilovolts of the bus to which the breaker is connected) × (the current in kA which the breaker must be capable of interrupting when its contacts part). This interrupting current is, of course, lower than the momentary current and depends on the speed of the breaker, such as, 8, 5, 3, or 2 cycles, which is a measure of the time from the occurrence of the fault to the extinction of the arc. Breakers of various speeds are classified by their rated interrupting times. The rated interrupting time of a circuit-breaker is the period between the instant of energizing the trip circuit and the arc extinction on an opening operation, as shown in Fig. 4.10. The tripping delay time which is usually assumed to be ½ cycle for relays to pick up precedes the rated interrupting time.

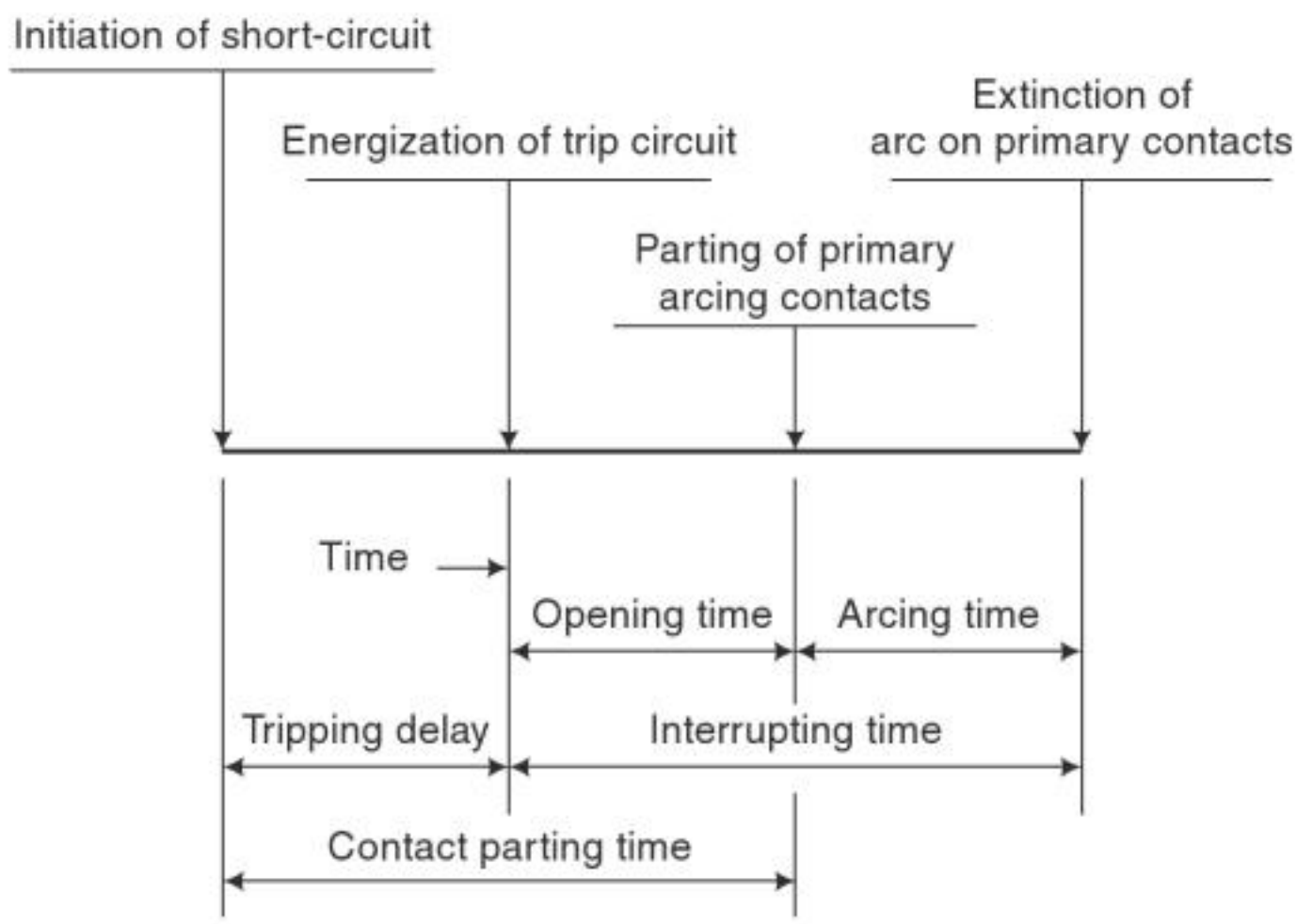

Fig. 4.10 *Definition of interrupting time*

Example 4.4 | The one-line diagram of a simple power system is shown in Fig. 4.1. A symmetrical three-phase fault occurs at the motor terminals. Determine the (i) subtransient fault current; (ii) subtransient fault current in the generator and the motor. Assume the system to be operating at no-load and at the rated voltage immediately before occurrence of the fault.

You have either reached a page that is unavailable for viewing or reached your viewing limit for this book.

You have either reached a page that is unavailable for viewing or reached your viewing limit for this book.

You have either reached a page that is unavailable for viewing or reached your viewing limit for this book.

and $\quad j\,0.30 + j\,0.10 + j\,0.0744$

$$= j\,0.4744\ pu$$

Hence, the Thevenin's equivalent reactance $X_{\text{eq. }pu}$ is given by

$$X_{\text{eq. }pu} = \frac{j\,0.4248 \times j\,0.4744}{j\,0.4248 + j\,0.4744}$$

$$= j\,0.224\ pu$$

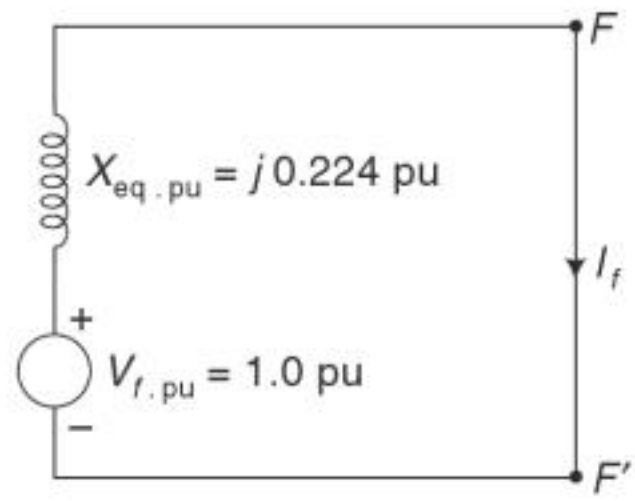

Fig. 4.12(c) *Thevenin's equivalent circuit*

The Thevenin's equivalent circuit with fault path FF' showing the fault current I_f is shown in Fig. 4.12(c)

Per-unit fault current

$$I_{f.\,pu} = \frac{V_{f.\,pu}}{X_{\text{eq. }pu}} = \frac{1.0}{j\,0.224} = -j\,4.46\ pu$$

Base current in the line circuit is given by

$$I_b = \frac{(\text{MVA})_b \times 10^3}{\sqrt{3}\,(\text{kV})_b} A = \frac{30 \times 10^3}{\sqrt{3} \times 66} = 262.7\ \text{A}$$

The actual fault current

$$I_f = I_{f.\,pu} \times I_b = 4.46 \times 262.7 = 1172\ \text{A}$$

Fault MVA $= \sqrt{3} \times V_f \times I_f \times 10^{-3} = \sqrt{3} \times 66 \times 1172 \times 10^{-3} = 133.9$ MVA

Alternative Method:

$$\text{Fault MVA, } (\text{MVA})_f = \frac{(\text{MVA})_b}{X_{\text{eq. }pu}} = \frac{30}{0.224} = 133.9\ \text{MVA}$$

$$\text{Fault current } I_f = \frac{(\text{MVA})_f \times 10^3}{\sqrt{3} \times (\text{kV})_b} = \frac{133.9 \times 10^3}{\sqrt{3} \times 66} = 1172\ \text{A}$$

Example 4.6 | Two 11-kV generators G_1 and G_2 are connected in parallel to a bus-bar. A 66 kV feeder is connected to the bus-bar through a 11/66 kV transformer.

Calculate fault MVA for three-phase symmetrical fault: (a) at the high-voltage terminals of the transformer, and (b) at the load end of the feeder. Find the fault current shared by G_1 and G_2 in each case. The ratings of the equipment are as follows:

Generator G_1 : 11 kV, 50 MVA, $X''_{G1} = 15\%$

Generator G_2 : 11 kV, 25 MVA, $X''_{G2} = 12\%$

Transformer T : 11/66 kV, 75 MVA, $X_T = 10\%$

Feeder : 66 kV, $X_F = 25\ \Omega$

Assume the system to be operating on no load before the fault and neglect the losses.

Copyrighted material

You have either reached a page that is unavailable for viewing or reached your viewing limit for this book.

You have either reached a page that is unavailable for viewing or reached your viewing limit for this book.

You have either reached a page that is unavailable for viewing or reached your viewing limit for this book.

The fault current shared by generators is given by [From Fig. 4.13(e)]

$$I_{G1.\,pu} = 1.497 \times \frac{0.36}{0.225 + 0.36} = 0.9212\ pu$$

$$I_{G2.\,pu} = 1.497 \times \frac{0.225}{0.225 + 0.36} = 0.5758\ pu$$

Base current I_b on LT side = 3941. 145 A.

Hence I_{G1} and I_{G2} in amperes are given by

$$I_{G1} = I_{G1.\,pu} \times I_b = 0.9212 \times 3941.145 = 3630.58 \text{ A}$$

$$I_{G2} = I_{G2.\,pu} \times I_b = 0.5758 \times 3941.145 = 2269.31 \text{ A}$$

Total fault current I_f on LT side = $(I_{G1} + I_{G2})$

$$= I_{f.\,pu} \times I_b = 1.497 \times 3941.145$$

$$= 5899.89 \text{ A}$$

Note: From the calculated values of the fault current and fault MVA, it is clear that these values reduce drastically as the fault point moves further and further away from the source. This reduction is mainly due to more impedance coming in the path of the fault current. The MVA rating of the circuit breaker to be placed at any location should be more than the fault MVA (fault level) at that location.

Example 4.7 | A generating station consisting of two generators, one of 20 MVA, 11 kV, 0.18 *pu* reactance with the unit transformer of 20 MVA, 11/132 kV, 0.08 *pu* reactance, another of 30 MVA, 11 kV, 0.18 *pu* reactance with the transformer of 30 MVA, 11/132 kV, 0.12 *pu* reactance, transmits power over double circuit 132-kV transmission line. Each line is having reactance of 120 ohms per phase.Determine the fault current supplied by the generators to a three-phase solid fault on the 132-kV bus-bar at the receiving end. Neglect pre-fault current and losses. Assume pre-fault generated voltages at rated value.

Solution: The one-line diagram of the system is shown in Fig. 4.14(a).

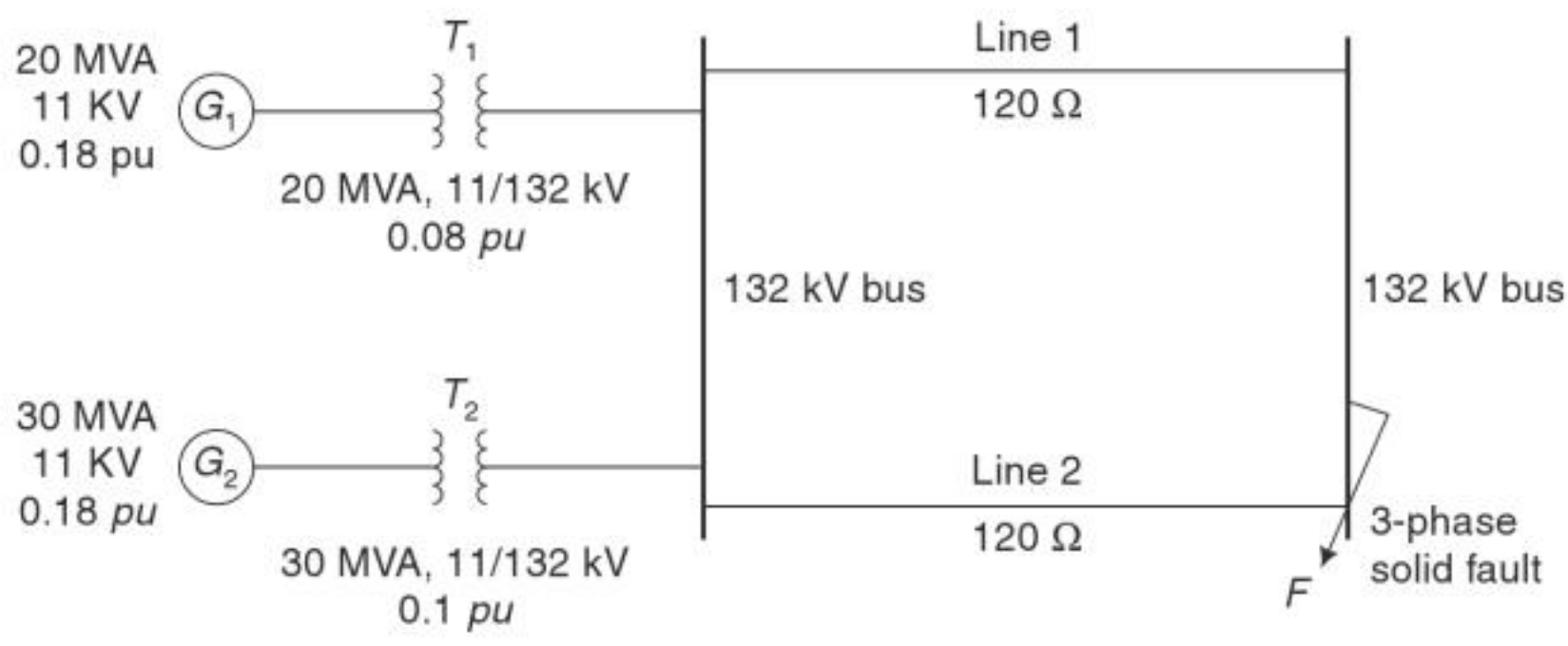

Fig. 4.14(a) *One-line diagram of the system of Example 4.7*

Let us choose the base MVA of 30 and base voltage of 11 kV on LT side. The base voltage on the HT side is 132 kV.

You have either reached a page that is unavailable for viewing or reached your viewing limit for this book.

You have either reached a page that is unavailable for viewing or reached your viewing limit for this book.

You have either reached a page that is unavailable for viewing or reached your viewing limit for this book.

The circuit for calculating the Thevenin's equivalent reactance X_{eq} as viewed from the fault point F_1 (with voltage sources short circuited) is shown in Fig. 4.15(b)

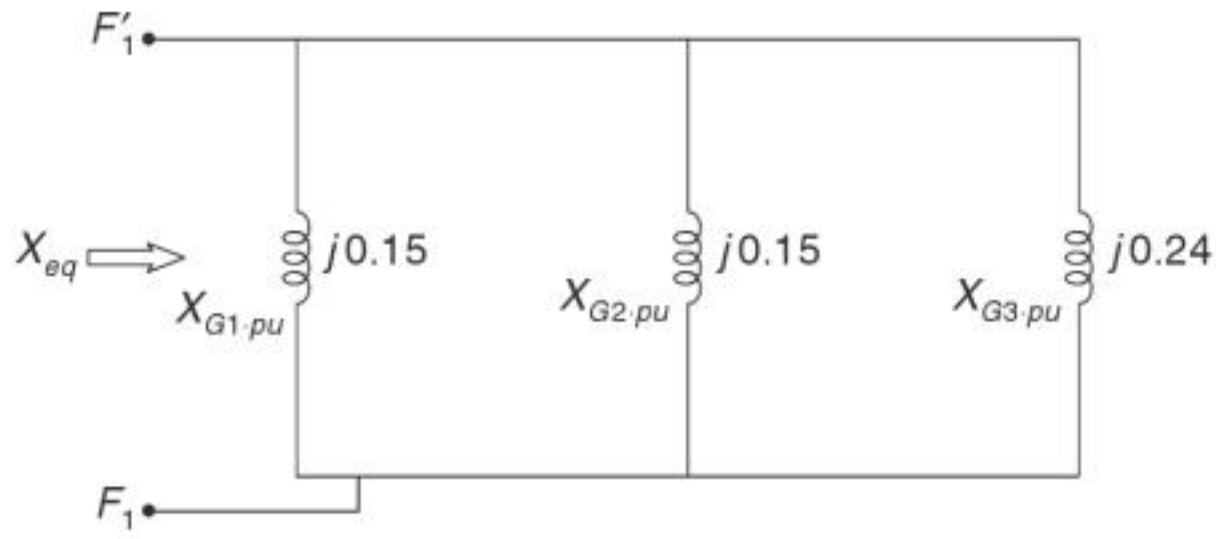

Fig. 4.15(b) *Circuit for calculating X_{eq} for fault at F_1*

$X_{eq.\,pu}$ for fault at F_1 is given by

$$X_{eq.\,pu} = \frac{\left(j\,\frac{0.15}{2} \times j\,0.24\right)}{\left(j\,\frac{0.15}{2} + j\,0.24\right)} = j\,0.057\ pu$$

Per-unit fault MVA is

$$(\text{MVA})_{f.\,pu} = \frac{1}{X_{eq.\,pu}}$$

and fault MVA is

$$(\text{MVA})_f = \frac{(\text{MVA})_b}{X_{eq.\,pu}} = \frac{10}{0.057} = 175.4\ \text{MVA}$$

(b) Fault on h.v. side of the transformer.

The circuit for calculating X_{eq} for fault at F_2 is shown in Fig. 4.15(c).

Per-unit value of X_{eq} is given by

$$X_{eq.\,pu} = j\,0.16 + \frac{\left(j\,\frac{0.15}{2} \times j\,0.24\right)}{\left(j\,\frac{0.15}{2} + j\,0.24\right)}$$

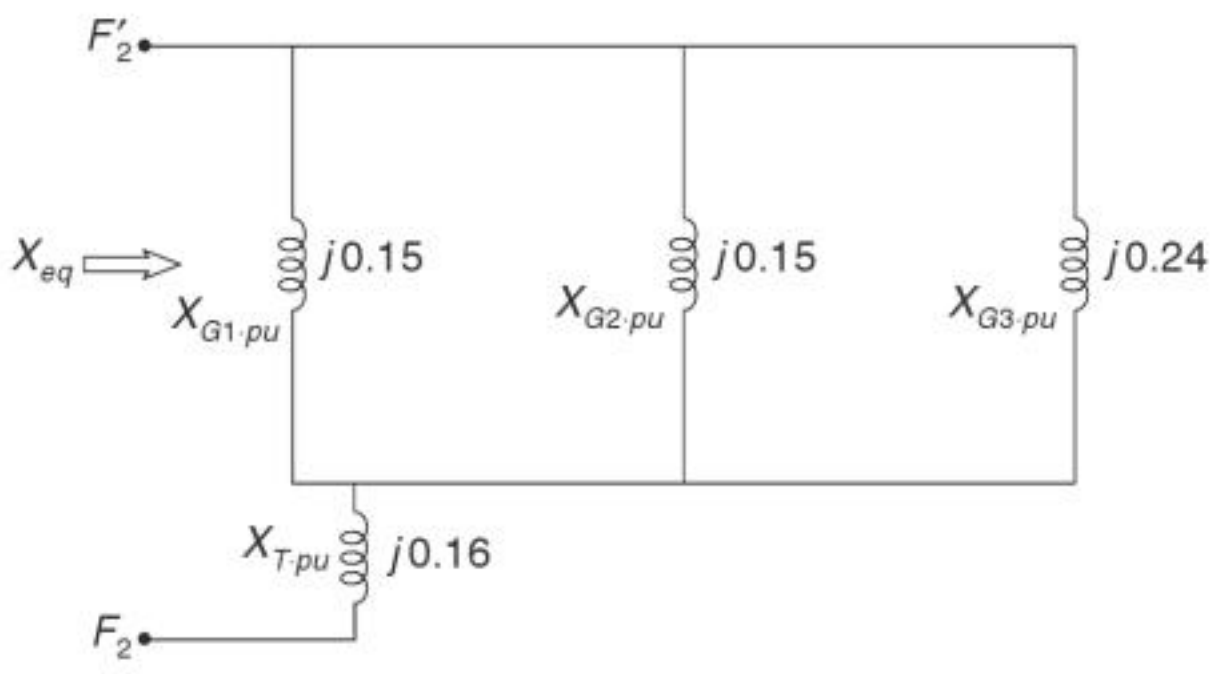

Fig. 4.15(c) *Circuit for calculating X_{eq} for fault at F_2*

Copyrighted material

You have either reached a page that is unavailable for viewing or reached your viewing limit for this book.

You have either reached a page that is unavailable for viewing or reached your viewing limit for this book.

You have either reached a page that is unavailable for viewing or reached your viewing limit for this book.

$$= \frac{25 \times 10^3}{\sqrt{3} \times 6.6} = 2187 \text{ A}$$

Therefore, $I_f = I_{f.\,pu} \times I_b = 4.95 \times 2187 = 10{,}826$ A

Alternative method

From Fig. 4.17(e), $I_{f.\,pu} = 4 \times \frac{1}{j\,1.25} + \frac{1}{j\,0.57}$

$$= -j\,3.20 - j\,1.75 = -j\,4.95\ pu.$$

$$I_f = I_{f.\,pu} \times I_b = 4.95 \times 2187 = 10{,}826 \text{ A}$$

(b) From Fig. 4.17(e), current through circuit breaker A is

$$I_{f.\,pu}\,(A) = 3 \times \frac{1}{j\,1.25} + \frac{1}{j\,0.57} = -j\,2.40 - j\,1.75 = -j\,4.15\ pu$$

and $I_f(A) = 4.15 \times 2187 = 9076$ A

(c) For finding the momentary current through the breaker, the presence of dc offset current is taken into account by multiplying the symmetrical subtransient current by a factor of 1.6.

Hence, momentary current through the breaker A.

$= 1.6 \times I_f(A) = 1.6 \times 9076 = 14{,}521$ A

(d) To calculate the current to be interrupted by the breaker, motor subtransient reactance ($X''_{dm} = j\,0.25$) is replaced by transient reactance ($X'_{dm} = j\,0.30$).

Hence, the reactances of the circuit of Fig. 4.17(e) modify to that of Fig. 4.17(f).

Current (symmetrical) to be interrupted by the breaker (as shown by arrow)

$$= 3 \times \frac{1}{j\,1.5} + \frac{1}{j\,0.57} = -j\,3.75\ pu$$

Allowance for the dc offset value is made by multiplying the symmetrical current by a factor of 1.1.

Therefore, the current to be interrupted by breaker A is

$1.1 \times 3.75 \times 2187 = 9021$ A

Example 4.10 | A 100-MVA, 13.2 kV genrator is connected to a 100 MVA, 13.2/132 kV transformer. The generator's reactances are $X''_d = 0.15\ pu$, $X'_d = 0.25\ pu$, $X_d = 1.25\ pu$ on a 100 MVA base, while the transformer reactance is 0.1 *pu* on the same base. The system is operating on no load, at rated voltage when a three-phase symmetrical fault occurs at the HT terminals of the transformer. Determine

(a) The subtransient, transient and steady state symmetrical fault currents in *pu* and in amperes

(b) The maximum possible dc component

(c) Maximum value of instantaneous current

(d) Maximum rms value of the asymmetrical fault current.

Copyrighted material

You have either reached a page that is unavailable for viewing or reached your viewing limit for this book.

You have either reached a page that is unavailable for viewing or reached your viewing limit for this book.

You have either reached a page that is unavailable for viewing or reached your viewing limit for this book.

Solution: All reactances are given on MVA base of 50 and appropriate voltage bases. Hence, the chosen base MVA is 50 and base voltages are 11 kV and 66 kV in LT and HT circuits respectively.

The pre-fault equivalent circuit is shown in Fig. 4.19(b) and the equivalent circuit under faulted condition is shown in Fig. 4.19(c).

Taking the prefault voltage V_f as the reference phasor,

$$V_{f.\,pu} = \frac{10.5}{11} = 0.954 < 0°\ pu$$

Base current $$I_b = \frac{50 \times 10^3}{\sqrt{3} \times 11} = 2624 \text{ A}$$

Load current $$I_L = \frac{40 \times 10^3}{\sqrt{3} \times 10.5 \times 0.8} = 2749 \text{ A} < 36.9° \text{ A}$$

$$I_{L.\,pu} = \frac{2749}{2624} = 1.047 < 36.9°$$

$$= 1.047\ (0.8 + j\,0.6) = 0.837 + j\,0.628\ pu$$

From Fig. 4.19(b)

For the generator,

$$V_{t.\text{pu}} = V_{f.\,pu} + I_{L.\,pu}\ (j\,0.1 + j\,0.1 + j\,0.1)$$

$$= 0.954 + j\,0.3\ (0.837 + j\,0.628)$$

$$= 0.766 + j\,0.251\ pu$$

$$E''_{g.\,pu} = V_{t.\,pu} + I_{L.\,pu}\ (j\,0.20)$$

$$= 0.766 + j\,0.251 + j\,0.20\ (0.837 + j\,0.628)$$

$$= 0.640 + j\,0.4184\ pu$$

For the motor

$$V_{t.\,pu} = V_{f.\,pu} = 0.954 < 0°.$$

$$E''_{m.\,pu} = V_{t.\,pu} - I_{L.\,pu}\ (j\,0.20)$$

$$= 0.954 - j\,0.20\ (0.837 + j\,0.628)$$

$$= 1.079 - j\,0.1674\ pu$$

From Fig. 4.19(c)

$$I''_{g.\,pu} = \frac{E''_{g.\,pu}}{(j\,0.50)} = \frac{0.640 + j\,0.4184}{j\,0.50} = 0.837 - j\,1.280\ pu$$

$$I''_{m.\,pu} = \frac{E''_{m.\,pu}}{j\,0.2} = \frac{1.079 - j\,0.1674}{j\,0.2} = -\,0.837 - j\,5.395\ pu$$

Current in the fault,

$$I''_{f.\,pu} = I''_{g.\,pu} + I''_{m.\,pu}$$

$$= 0.837 - j\,1.280 - 0.837 - j\,5.395$$

$$= -\,j\,6.675\ pu$$

Copyrighted material

You have either reached a page that is unavailable for viewing or reached your viewing limit for this book.

You have either reached a page that is unavailable for viewing or reached your viewing limit for this book.

You have either reached a page that is unavailable for viewing or reached your viewing limit for this book.

Following are the disadvantages of this method:

(i) Since full-load current is always flowing through the reactor, there is a constant voltage drop and power loss in the reactor even during normal operating conditions.

(ii) When a fault occurs on a feeder, the voltage on the common busbar drops to a low value with the result that the generators and the remaining healthy feeders may also fall out of step.

Due to above disadvantages and also since modern generators have sufficiently large transient reactance to protect them against fault (short-circuit), it is not a common practice to use separate reactors in series with the generators.

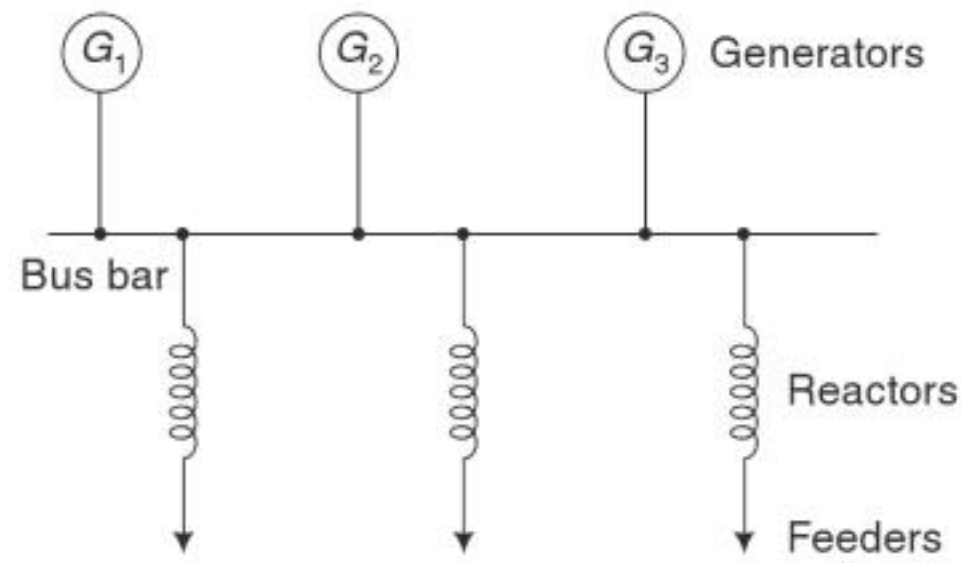

Fig. 4.21 *Feeder reactors*

2. **Feeder reactors** In this arrangement the reactors are connected in series with each feeder as show in Fig. 4.21. Since most of the faults occur on feeders, a large number of reactors are used for such circuits. This method avoids the main disadvantages of the first method since reactors are connected in series with feeders instead of generators. Two main advantages of feeder reactors are as follows:

   (i) In the case of a fault on any feeder, the main voltage drop is in its reactor only so that the bus-bar voltage is not affected and there is a little tendency for the generator to lose synchronism.

   (ii) Since the fault on a feeder will not affect other feeders, the effects of faults are localised.

   Disadvantages are as follows.

   (i) This method provides no protection to the generators if a fault occurs on the busbars. But, since the busbar faults are rare, this drawback is not of much importance.

   (ii) The disadvantage of constant voltage drop and power loss in the reactors even during normal operating conditions is equally present in this method also.

3. **Busbar reactors** The above two methods of locating reactors suffer from the disadvantage that there is considerable voltage drop and power loss in the reactors due to flow of full-load current through them during normal operating conditions. This disadvantage can be overcome by connecting the reactors in the busbars. Two methods used for this purpose are ring system and tie-bar system.

   (a) *Ring System* In this method, the bus-bar is divided into sections and these sections are interconnected through reactors as shown in Fig. 4.22. Here each feeder is generally fed by one generator only. Since each generator

You have either reached a page that is unavailable for viewing or reached your viewing limit for this book.

You have either reached a page that is unavailable for viewing or reached your viewing limit for this book.

You have either reached a page that is unavailable for viewing or reached your viewing limit for this book.

For a symmetrical three-phase fault at point F on an outgoing feeder connected to A, the reactance diagram with voltage sources short circuited will be as shown in Fig. 4.25(b). The circuit of Fig. 4.25(b) reduces to that shown in Fig. 4.25(c).

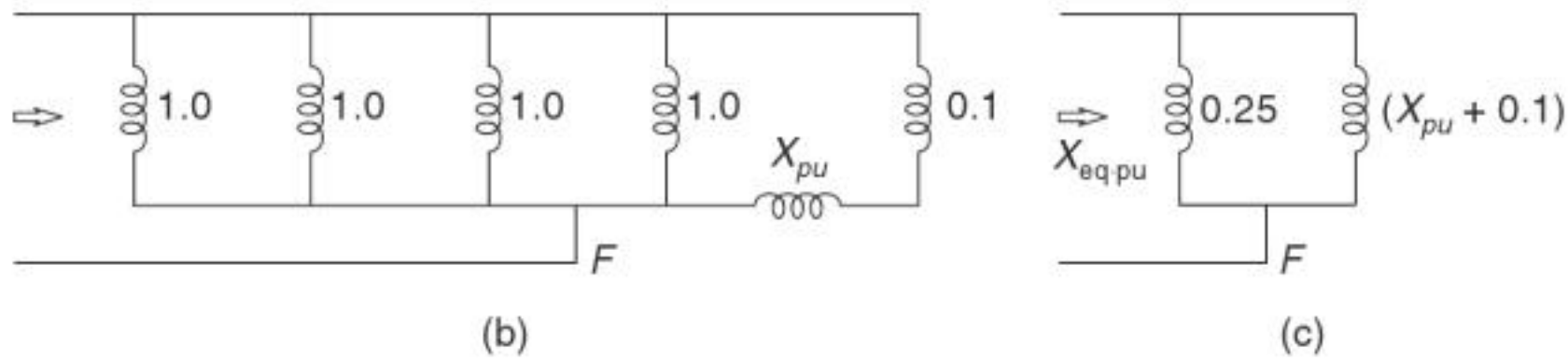

Fig. 4.25 (b) Reactance diagram (c) Reduced circuit for 4.25(b)

From Fig. 4.25(c), the equivalent reactance of the network as viewed from the fault point F is given by

$$X_{\text{eq. } pu} = \frac{0.25\,(X_{pu} + 0.1)}{[0.25 + (X_{pu} + 0.1)]} = \frac{0.25\,(X_{pu} + 0.1)}{(X_{pu} + 0.35)}$$

Per-unit fault MVA is

$$(\text{MVA})_{f.\,pu} = \frac{1}{X_{\text{eq. } pu}} = \frac{(X_{pu} + 0.35)}{0.25(X_{pu} + 0.1)}$$

Per-unit value of the required fault MVA

$$(\text{MVA})_{f.\,pu} = \frac{500}{50} = 10$$

Hence, $$10 = \frac{(X_{pu} + 0.35)}{0.25(X_{pu} + 0.1)}$$

or $$X_{\text{pu}} = 0.066\ pu$$

Actual value, $$X = X_{pu} \times X_b = 0.066 \times \frac{(33)^2}{50} = 1.437\ \Omega$$

Example 4.14 | A generating station has four identical generators G_1, G_2, G_3 and G_4 each of 20 MVA, 11 kV having 20% reactance. They are connected to a busbar which has a busbar reactor of 25% reactance on 20 MVA base, inserted between G_2 and G_3. A 66-kV feeder is taken off from the bus-bars through a 15-MVA transformer having 8% reactance. A symmetrical 3-phase fault occurs at the high voltage terminals of the transformer. Calculate the current fed into the fault.

Solution: The one-line diagram of the system is shown in Fig. 4.26(a).

Let the base MVA chosen be 20 and base kV be 11 kV on generator side and 66 kV on feeder side.

Per-unit reactance of each generator

$$X_{g.\,pu} = 0.20\ pu$$

Per-unit reactance of transformer on new base,

$$X_{t.\,pu} = 0.08 \times \frac{20}{15} = 0.10\ pu$$

Copyrighted material

You have either reached a page that is unavailable for viewing or reached your viewing limit for this book.

You have either reached a page that is unavailable for viewing or reached your viewing limit for this book.

You have either reached a page that is unavailable for viewing or reached your viewing limit for this book.

4.6.1 Fundamentals of Symmetrical Components

The method of symmetrical components was introduced by C L Fortescue, an American Scientist, in 1918. His work proved that an unbalanced system of n related phasors can be resolved into n systems of balanced phasors called the symmetrical components of the original phasors. The n phasors of each set of components are equal in magnitude, and the angles between adjacent phasors of the set are equal. Although the method of symmetrical components is applicable to any unbalanced polyphase system, but its application to a more practical three-phase system is of main interest of discussion here.

According to Fortescue's theorem, three unbalanced phasors (voltages or currents) of a three-phase system can be resolved into three balanced systems of phasors called positive, negative and zero sequence phasors (components). The positive, negative and zero sequence components of the original unbalanced phasors of the three-phase system are called the "Symmetrical Components" which are defined as follows:

1. Positive-sequence components consist of three phasors equal in magnitude, displaced from each other by 120° in phase, and having the same phase sequence as the original phasors.
2. Negative-sequence components consist of three phasors equal in magnitude, displaced from each other by 120° in phase, and having the phase sequence opposite to that of the original phasors.
3. Zero-sequence components consists of three phasors equal in magnitude and in phase with each other (i.e. with zero phase displacement from each other).

The phase sequence in a three-phase system is defined as the order in which the three phases pass through a positive maximum. While solving a problem by symmetircal components, the three phases of the system are customarily designated as a, b, and c in such a manner that the phase sequence of the voltages and currents in the system is abc. Thus the phase sequence of the positive-sequence components of the unbalanced phasors is abc, and the phase-sequence of the negative-sequence components is acb. The original phasors of voltages are designated as V_a, V_b, and V_c; and original phasors of current as I_a, I_b and I_c. The three sets of symmetrical components are designated by the additional subscript 1 for the positive-sequence components, 2 for the negative sequence components, and 0 for the zero-sequence components. The positive-sequence components of V_a, V_b, and V_c are designated by V_{a1}, V_{b1}, and V_{c1}. Similarly, the negative-sequence components are V_{a2}, V_{b2}, and V_{c2}, and the zero-sequence components are V_{a0}, V_{b0}, and V_{c0}. Similarly, the positive, negative and zero-sequence components of I_a, I_b and I_c are designated by I_{a1}, I_{b1}, and I_{c1}, I_{a2}, I_{b2}, and I_{c2}, and I_{a0}, I_{b0}, and I_{c0} respectively.

Since each of the original unbalanced phasors is the sum of its components, the original phasors of voltage can be expressed in terms of their components as

$$V_a = V_{a1} + V_{a2} + V_{a0} \tag{4.40}$$

$$V_b = V_{b1} + V_{b2} + V_{b0} \tag{4.41}$$

$$V_c = V_{c1} + V_{c2} + V_{c0} \tag{4.42}$$

Three sets of symmetrical components of three unbalanced phasors of voltage (V_a, V_b and V_c) are shown in Fig. 4.28. The graphical addition of symmetrical components

Copyrighted material

You have either reached a page that is unavailable for viewing or reached your viewing limit for this book.

You have either reached a page that is unavailable for viewing or reached your viewing limit for this book.

You have either reached a page that is unavailable for viewing or reached your viewing limit for this book.

(ii) Since the sum of the three line currents equals the current in the neutral wire, we get

$$I_{a0} = \frac{1}{3}(I_a + I_b + I_c) = \frac{1}{3} I_n \tag{4.69}$$

or

$$I_n = 3I_{a0} \tag{4.70}$$

Hence, the current in the neutral is three times the zero sequence line current.

(iii) If the neutral connection is absent,

$$I_{a0} = \frac{1}{3} I_n = 0 \tag{4.71}$$

i.e., in the absence of neutral connection the zero sequence line corrent is always zero.

4.6.2 Power in Terms of Symmetrical Components

The power in a three-phase circuit can be computed directly from the symmetrical components of voltage and current. The symmetrical component transformation is power invarient, which means that the sum of powers of the three symmetrical components equals the three-phase power.

The total complex power in a three-phase circuit is given by

$$S = P + jQ = V_a I_a^* + V_b I_b^* + V_c I_c^* \tag{4.72}$$

In matrix notation

$$S = [V_p]^T [I_p]^*$$

or

$$S = [AV_s]^T [AI_s]^*$$

$$= [V_s]^T [A]^T [A]^* [I_s]^* \tag{4.73}$$

Now

$$[A]^T [A]^* = \begin{bmatrix} 1 & a^2 & a \\ 1 & a & a^2 \\ 1 & 1 & 1 \end{bmatrix} \begin{bmatrix} 1 & 1 & 1 \\ a & a^2 & 1 \\ a^2 & a & 1 \end{bmatrix}$$

$$= 3 \begin{bmatrix} 1 & 0 & 0 \\ 0 & 1 & 0 \\ 0 & 0 & 1 \end{bmatrix} = 3\,[U] \tag{4.74}$$

Therefore,

$$S = 3\,[V_s]^T [U]\,[I_s]^*$$

$$= 3\,[V_s]^T [I_s]^*$$

$$= 3\,[V_{a1}\ V_{a2}\ V_{a0}] \begin{bmatrix} I_{a1}^* \\ I_{a2}^* \\ I_{a0}^* \end{bmatrix}$$

$$= 3\,V_{a1} I_{a1}^* + 3V_{a2} I_{a2}^* + 3V_{a0} I_{a0}^* \tag{4.75}$$

= Sum of symmetrical component powers

Copyrighted material

You have either reached a page that is unavailable for viewing or reached your viewing limit for this book.

You have either reached a page that is unavailable for viewing or reached your viewing limit for this book.

You have either reached a page that is unavailable for viewing or reached your viewing limit for this book.

sequence only. The single-phase equivalent circuit composed of the impedances to the current of any one sequence only is called the sequence network for that particular sequence. The sequence network contains any generated emfs of like sequence. Thus, three-sequence networks can be formed for every power system. Sequence networks carrying the currents I_{a1}, I_{a2}, and I_{a0} are interconnected to represent the different unbalanced fault conditions. Therefore, in order to calculate the effect of a fault by the method of symmetrical components, it is essential to determine the sequence impedances and to combine them to form the sequence networks.

4.6.5 Sequence Impedances of Power System Elements

A power system consists of synchronous generators, transformers, transmission lines and loads connected together. The impedances offered by various elements of the power system to positive, negative and zero sequence currents is of considerable importance in determining the fault currents in a 3-phase unbalanced system. The impedance of a particular sequence can be found by applying a voltage of that sequence only at the three terminals of the power system element (component) and measuring the current. All elements of the power system are considered to be symmetrical.

The positive and negative sequence impedances of linear, symmetrical and static circuits (e.g., transmission lines, cables, transformers and static loads) are identical and are the same as those used in the analysis of balanced conditions. This is because of the fact that the impedance of such circuits is independent of the phase sequence, provided the applied voltages are balanced. The positive and negative sequence impedances of rotating machines are generally different. The zero sequence impedance depends upon the path taken by the zero sequence current. As the path of zero sequence current is generally different from the path of positive and negative sequence currents, the zero sequence impedance is usually different from positive or negative sequence impedance.

Sequence Impedances of Transmission Lines

Transmission line is a linear and static component of the power system. Considering the line to be fully transposed three-phase line, it is completely symmetrical also. Therefore, the transmission line offers the same impedance to positive and negative sequence currents. In other words, the positive and negative sequence impedances of the line are equal and are the same as the normal impedance of the line. For fault analysis, a transmission line is represented by the series impedance, the shunt branch being neglected. Therefore, for the line $Z_1 = Z_2 =$ series impedance of the line.

The character of zero-sequence impedance of a line is entirely different from either positive or negative sequence impedance. Zero-sequence currents can flow through the line if these currents get a return path. The return path is provided partly by the ground and partly by overhead ground wires. When only zero-sequence currents flow in the line, the currents in all the phases are identical in both magnitude and phase angle. These currents return partly through the ground and partly through the overhead ground wires. The ground wires being grounded at several towers, the return currents through the ground wires are not necessarily uniform along the entire length. The magnetic field created due to the flow of zero-sequence currents through the transmission line, ground and ground wires is very different from that due to the flow

Copyrighted material

You have either reached a page that is unavailable for viewing or reached your viewing limit for this book.

You have either reached a page that is unavailable for viewing or reached your viewing limit for this book.

You have either reached a page that is unavailable for viewing or reached your viewing limit for this book.

damper windings are at double the rotor frequency. While sweeping over the rotor surface, the reluctances of direct and quadrature axes are alternately presented to the negative sequence mmf. The negative sequence impedance offered by the machine with consideration given to the damper windings, is often given by

$$Z_2 = \frac{j X''_d + X''_q}{2} \tag{4.95}$$

Figures 4.34(a) and (b) show negative sequence models of synchronous machine, on a three-phase and single-phase basis respectively. In this case also, the reference bus is at neutral potential which is the same as the ground potential. Z_n does not appear in the model as $I_n = I_{a2} + I_{b2} + I_{c2} = 0$

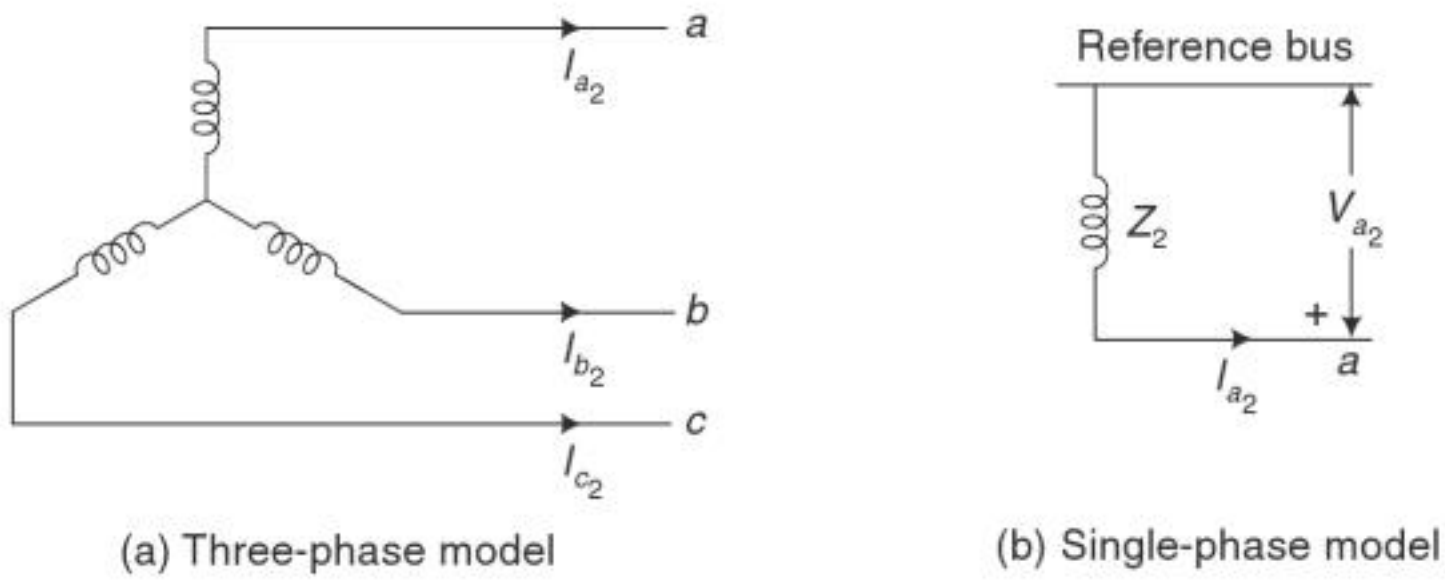

(a) Three-phase model (b) Single-phase model

Fig. 4.34 *Negative sequence network of synchronous machine*

From Fig. 4.34(b), the negative sequence voltage of terminal a with respect to reference bus is given by

$$V_{a2} = - I_{a2} Z_2 \tag{4.96}$$

Zero-Sequence Network

Since no zero-sequence voltages are induced in a synchronous machine, the zero-sequence network contains no emfs but includes the impedance offered to zero-sequence current. Three magnetic fields produced by the zero-sequence currents are in time-phase but are distributed in space phase by 120°. Therefore, the resultant air gap field due to zero-sequence currents is zero. Hence, the reactance offered by the rotor winding to the flow of zero-sequence currents is leakage reactance only.

Three-phase and single-phase zero-sequence network models are shown in Fig. 4.35(a) and(b) respectively. In Fig. 4.35(a), the current flowing in the impedance

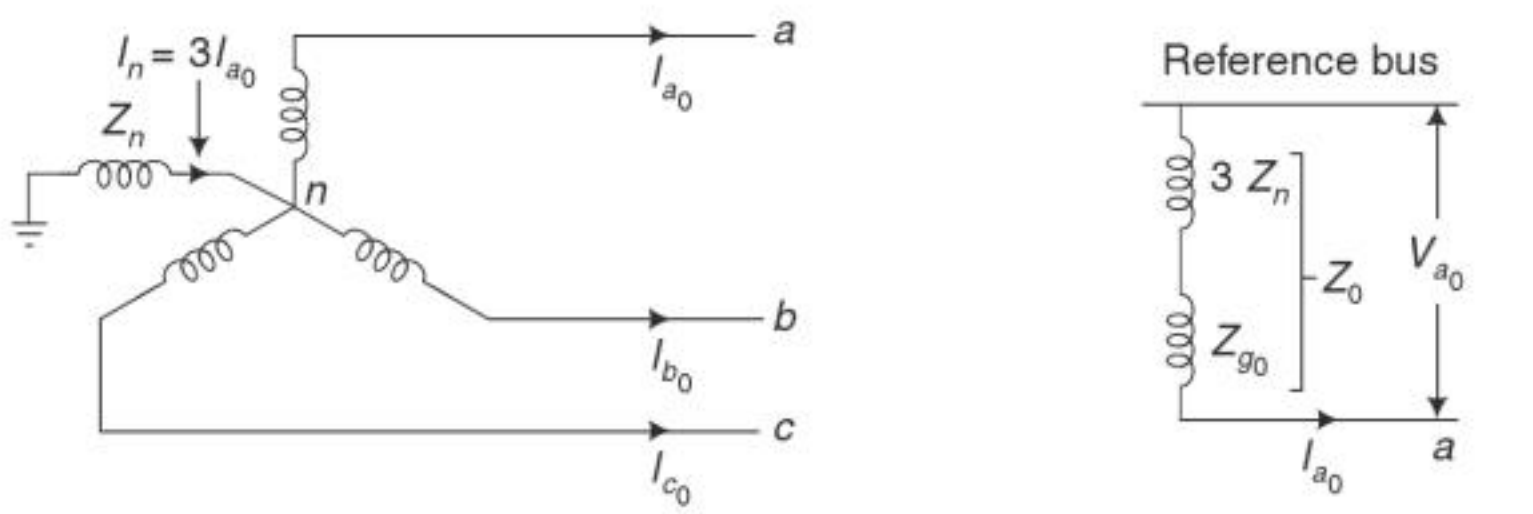

(a) Three-phase model (b) Single-phase model

Fig. 4.35 *Zero-sequence network of synchronous machine*

You have either reached a page that is unavailable for viewing or reached your viewing limit for this book.

You have either reached a page that is unavailable for viewing or reached your viewing limit for this book.

You have either reached a page that is unavailable for viewing or reached your viewing limit for this book.

network, points P and Q on the two sides of the transformer are connected by the zero-sequence impedance of the transformer.

Case 3: Y-Δ transformer bank with grounded Y neutral

When the neutral of star side is grounded, zero-sequence currents can flow in star because of availability of path to ground through the star and the corresponding induced currents can circulate in the delta. The induced zero-sequence currents which circulate within the delta only to balance the zero-sequence currents in the star cannot flow in the lines connected to the delta. Hence, the equivalent circuit must have a path from the line P on the star side through the zero-sequence impedance of the transformer to the reference bus and an open circuit must exist between the line Q on the delta side and the reference bus. If the neutral of the star is grounded through an impedance Z_n, its effect is indicated by including an impedance of $3Z_n$ in series with the zero-sequence impedance of the transformer in the zero-sequence network.

Case 4: Y-Δ transformer bank with ungrounded star

This is the special case of case 3 where the impedance Z_n between neutral and ground is infinite. The impedance $3Z_n$ in the equivalent circuit of case 3 also becomes infinite. Therefore, zero-sequence current cannot flow in the transformer windings.

Case 5: Δ-Δ transformer bank

Since a Δ circuit provides no return path for the zero-sequence current, it cannot flow in or out of Δ-Δ transformer, although it can circulate within the Δ windings.

The zero-sequence networks of transformers for the above five cases are shown in Fig. 4.38.

Symbols	Connection Diagrams	Zero-sequence Networks
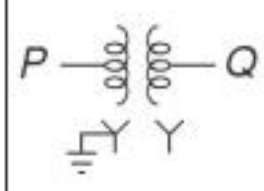	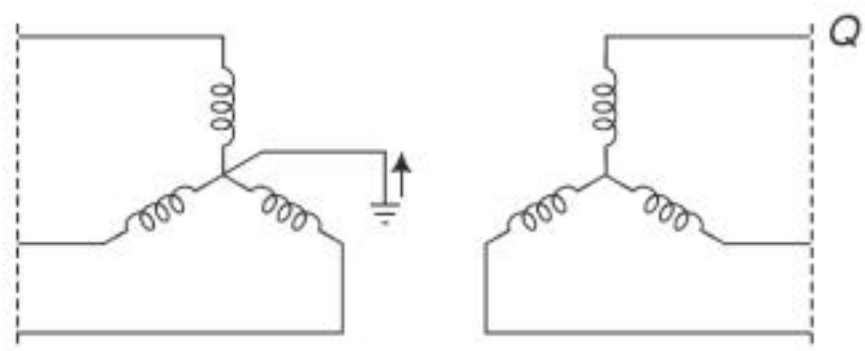	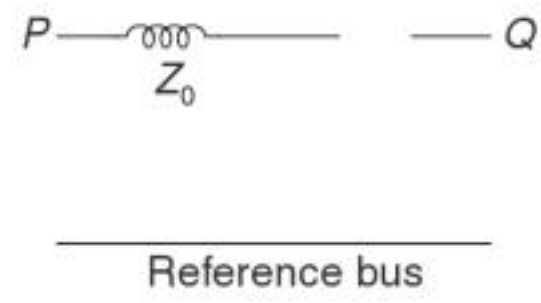
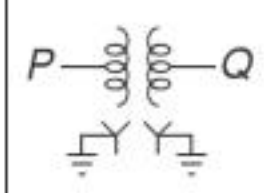	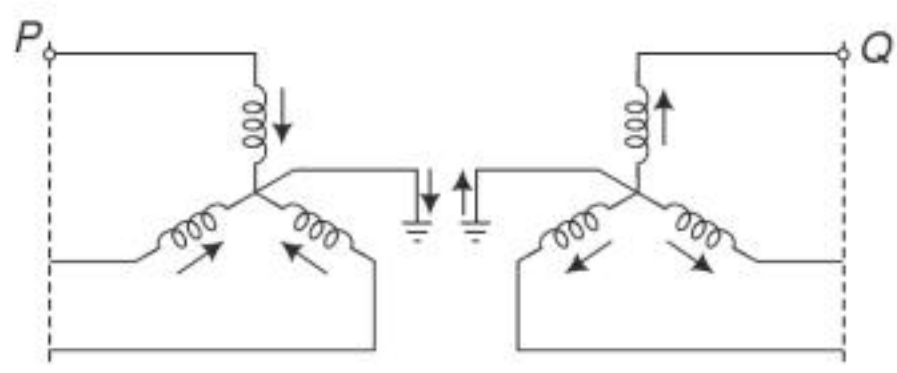	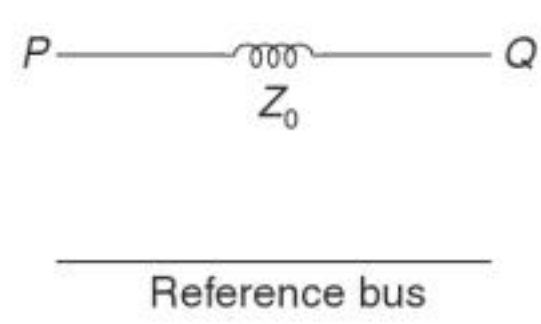
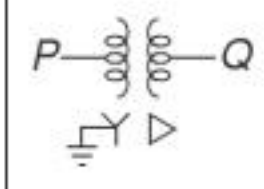	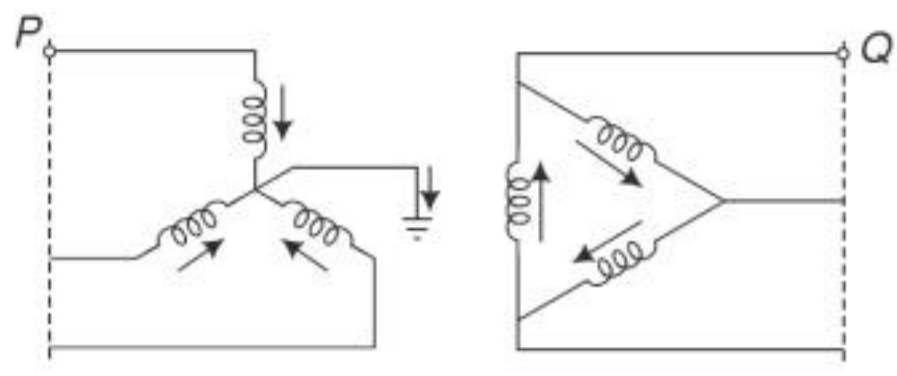	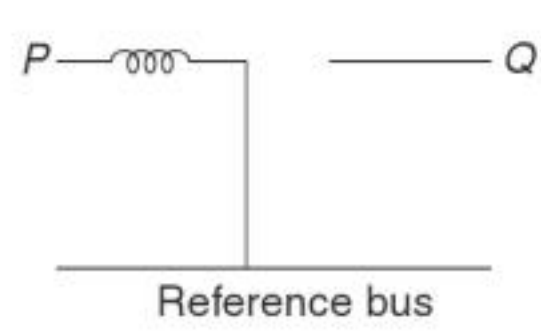

Fig. contd...

You have either reached a page that is unavailable for viewing or reached your viewing limit for this book.

You have either reached a page that is unavailable for viewing or reached your viewing limit for this book.

You have either reached a page that is unavailable for viewing or reached your viewing limit for this book.

Base voltage in motor circuit = $138 \times \frac{13.2}{132} = 13.8$ kV

The reactances of generator, transformers, line and motors are converted to *pu* values on appropriate bases as follows:

For Generator G_1 : Base MVA = 30, Base voltage = 13.8 kV

$$X_1 = X_2 = X''_d = 0.15\ pu,\ X_0 = 0.06\ pu$$

For transformers T_1 and T_2 : Base MVA = 30, Base voltage on LT side = 13.8 kV, Base voltage on HT side = 138 kV

The reactances of transformers on appropriate bases are

$$X_1 = X_2 = X_0 = 0.1 \times \frac{30}{50} \times \left(\frac{13.2}{13.8}\right)^2 = 0.0548\ pu$$

For transmission line : Base MVA = 30, Base voltage = 138 kV

The reactances are

$$X_1 = X_2 = \frac{90 \times 30}{(138)^2} = 0.142\ pu,\ X_0 = \frac{300 \times 30}{(138)^2} = 0.472\ pu$$

For motors M_1 and M_2 : Base MVA = 30, Base voltage = 13.8 kV

The reactances of motor M_1 are

$$X_1 = X_2 = X''_d = 0.2 \times \frac{30}{15} \times \left(\frac{12.5}{13.8}\right)^2 = 0.328\ pu$$

$$X_0 = 0.06 \times \frac{30}{15} \times \left(\frac{12.5}{13.8}\right)^2 = 0.098\ pu$$

The reactances of motor M_2 are

$$X_1 = X_2 = X''_d = 0.2 \times \frac{30}{10} \times \left(\frac{12.5}{13.8}\right)^2 = 0.492\ pu$$

$$X_0 = 0.06 \times \frac{30}{10} \times \left(\frac{12.5}{13.8}\right)^2 = 0.147\ pu$$

Reactance of current limiting reactor of generator

$$Z_n = X_n = 2 \times \frac{30}{(13.8)^2} = 0.315\ pu$$

$$3Z_n = 3X_n = 3 \times 0.315 = 0.945\ pu$$

Reactance of current limiting reactor of motor M_1

$$Z_n = X_n = 2 \times \frac{30}{(13.8)^2} = 0.315\ pu$$

$$3Z_n = 3X_n = 3 \times 0.315 = 0.945\ pu$$

Using the values of the above reactances, the positive, negative and zero-sequence networks are as shown in Fig. 4.42(a), (b) and (c) respectively.

Copyrighted material

You have either reached a page that is unavailable for viewing or reached your viewing limit for this book.

You have either reached a page that is unavailable for viewing or reached your viewing limit for this book.

You have either reached a page that is unavailable for viewing or reached your viewing limit for this book.

You have either reached a page that is unavailable for viewing or reached your viewing limit for this book.

You have either reached a page that is unavailable for viewing or reached your viewing limit for this book.

$$V_c = aV_{a1} + a^2V_{a2} + V_{a0}$$

$$= a\,(E_a - I_{a1}Z_1) + a^2(-I_{a2}Z_2) + (-I_{a0}Z_0)$$

$$= a\,(E_a - I_{a1}Z_1) - a^2I_{a1}Z_2 - I_{a1}Z_0$$

Substituting for I_{a1} and reorganizing, we get.

$$V_c = E_a \frac{3aZ_f + (a - a^2)\,Z_2 + (a - 1)\,Z_0}{(Z_1 + Z_2 + Z_0) + 3Z_f} \tag{4.110}$$

Fault Occuring Under Loaded Conditions

If the power system supplies balanced load during pre-fault condition, only positive sequence load currents flow in the system. Since a generator does not generate negative and zero-sequence voltages, the negative and zero-sequence components of the load current during pre-fault balanced load condition are zero. Therefore, negative and zero-sequence networks during fault under loaded conditions are the same as without load. Under the fault condition, the positive-sequence component of the fault current is to be added to the pre-fault load current. Hence, the positive-sequence network under fault condition must of course carry the load current. In order to account for load current, the synchronous machines in the positive-sequence network are replaced by subtransient (X''_d), transient (X'_d) or synchronous reactances depending upon time at which the fault currents are to be determined after the occurrence of the fault. The positive-sequence network which takes the pre-fault load current into account is used in the connection of sequence networks shown in Fig. 4.47(a) for computing sequence currents under fault condition.

If the positive-sequence network is replaced by its Thevenin equivalent network as shown in Fig. 4.47(b), the Thevenin voltage is equal to the pre-fault voltage V_f at the fault point F under loaded conditions. The Thevenin equivalent impedance is the impedance between fault point F and the reference bus of the positive sequence network (with voltage sources short circuited).

Comparison of Fault Currents Under Single-line-to-Ground and 3-Phase Symmetrical Faults

Though a 3-phase symmetrical fault is the most severe types of fault which gives rise to the maximum fault current, but under certain special situations an L-G fault can be more severe and can cause greater fault current than a three-phase symmetrical fault. A single line-to-ground fault located close to large generating units can be more severe than a 3-phase symmetrical fault at the same location.

If it is assumed that the sequence impedances Z_1, Z_2 and Z_0 are pure reactances (X_1, X_2 and X_0) and $Z_f = 0$, the fault currents are

Under three-phase symmetrical fault:

Fault current, $$I_a = \frac{E_a}{jX_1} \tag{4.111}$$

Copyrighted material

You have either reached a page that is unavailable for viewing or reached your viewing limit for this book.

You have either reached a page that is unavailable for viewing or reached your viewing limit for this book.

You have either reached a page that is unavailable for viewing or reached your viewing limit for this book.

$$V_b = a^2 V_{a1} + aV_{a2}$$

$$= a^2 (E_a - I_{a1}Z_1) + aI_{a1}Z_2$$

$$= a^2 E_a - I_{a1} (a^2 Z_1 - aZ_2)$$

$$= a^2 E_a - \frac{E_a (a^2 Z_1 - aZ_2)}{(Z_1 + Z_2 + Z_f)}$$

$$= E_a \frac{a^2 (Z_1 + Z_2 + Z_f) - (a^2 Z_1 - aZ_2)}{(Z_1 + Z_2 + Z_f)}$$

or

$$V_b = E_a \left(\frac{-Z_2 + a^2 Z_f}{Z_1 + Z_2 + Z_f} \right) \tag{4.131}$$

Similarly,

$$V_c = E_a \left(\frac{-Z_2 + aZ_f}{Z_1 + Z_2 + Z_f} \right) \tag{4.132}$$

Check:

$$V_b - V_c = \frac{E_a (a^2 - a) Z_f}{Z_1 + Z_2 + Z_f}$$

$$= (a^2 - a) I_{a1} Z_f = I_b Z_f$$

Note: Current caused by any fault that does not involve ground, cannot contain zero sequence component.

4.7.3 Double Line-to-Ground (2L-G) Fault

A double line-to-ground fault at F in a power system is shown in Fig. 4.50. The faulted phases are b and c which are shorted to the ground through the fault impedance Z_f.

The conditions at the fault are expressed as

$$I_a = I_{a1} + I_{a2} + I_{a0} = 0 \tag{4.133}$$

$$V_b = V_c = (I_b + I_c) Z_f \tag{4.134}$$

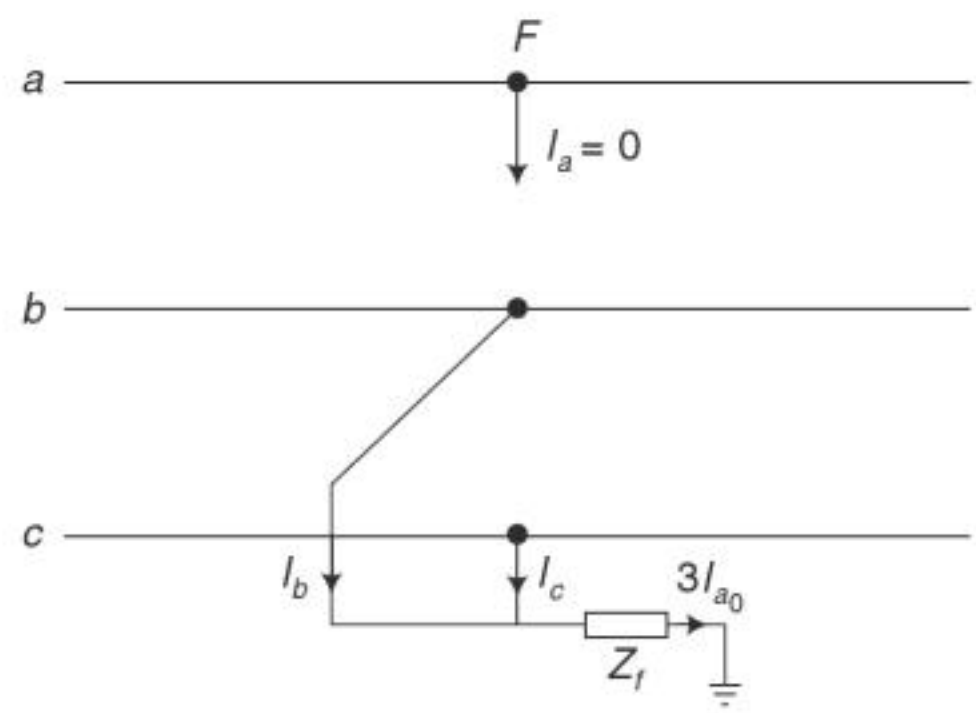

Fig. 4.50 *Double line-to-ground fault*

Since,

$$\begin{bmatrix} I_{a1} \\ I_{a2} \\ I_{a0} \end{bmatrix} = \frac{1}{3} \begin{bmatrix} 1 & a & a^2 \\ 1 & a^2 & a \\ 1 & 1 & 1 \end{bmatrix} \begin{bmatrix} 0 \\ I_b \\ I_c \end{bmatrix} \qquad \text{(As } I_a = 0 \text{ in this case)}$$

Hence,

$$I_{a0} = \frac{1}{3} (I_b + I_c)$$

or

$$(I_b + I_c) = 3I_{a0}$$

You have either reached a page that is unavailable for viewing or reached your viewing limit for this book.

You have either reached a page that is unavailable for viewing or reached your viewing limit for this book.

You have either reached a page that is unavailable for viewing or reached your viewing limit for this book.

(a) Three-phase symmetrical fault

(b) A single line-to-ground fault

(c) Line-to-line fault

For a generator, assume –ve sequence reactance to be 75% that of +ve sequence.

Solution: One-line diagram of the system is shown in Fig. 4.53. The fault occurs at point *F*. Let us choose a common base MVA of 30 MVA and base voltage of 6.6 kV on LV side. Then base voltage on HV side, i.e., of transmission line is 33 kV.

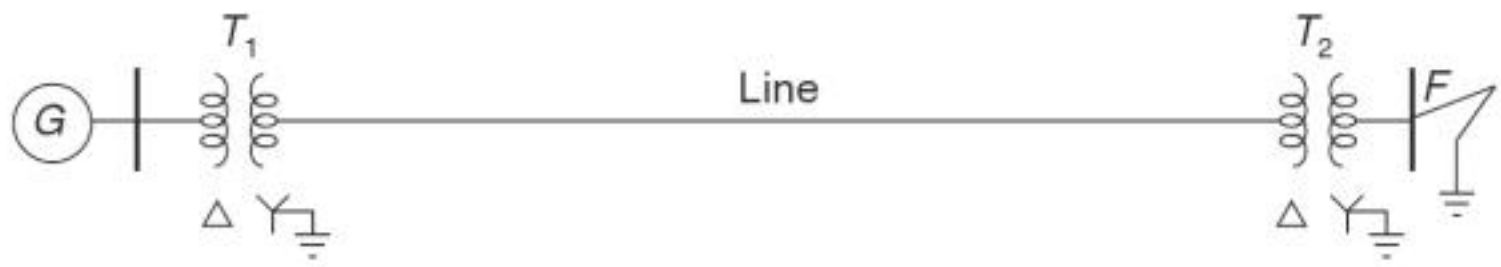

Fig. 4.53 *One-line diagram of the system*

The sequence impedances on the common base MVA and the concerned base voltages are

$$\text{Generator } G : Z_{g1} = j\,0.20\ pu,\ Z_{g2} = j\,0.20 \times 0.75$$

$$= j\,0.15\ pu,\ Z_{g0} \qquad Z_{g0} \text{ is not necessary to know.}$$

$$\text{Transformers} : Z_{T1} = Z_{T2} = Z_{T0} = j\,0.10\ pu$$

$$\text{Transmission line} : Z_{L1} = Z_{L2} = j\,5 \times \frac{30}{(33)^2}$$

$$= j\,0.138\ pu \qquad Z_{L0} \text{ is not necessary to know.}$$

Positive, negative and zero sequence networks are then drawn as shown in Figs. 4.54(a), (b) and (c).

From sequence networks of Fig. 4.54 it is clear that

$$Z_1 = Z_{g1} + Z_{T1} + Z_{L1} + Z_{T1}$$

$$= j\,(0.20 + j\,0.10 + j\,0.138 + j\,0.10)$$

$$= j\,0.538\ pu$$

$$Z_2 = Z_{g2} + Z_{T2} + Z_{L2} + Z_{T2}$$

$$= j\,(0.15 + j\,0.10 + j\,0.138 + j\,0.10)$$

$$= j\,0.488\ pu$$

$$Z_0 = Z_{T0} = j\,0.10\ pu$$

Pre-fault voltage at $F = E_a = 1.0\ pu$.

(a) When 3-phase symmetrical fault occurs at *F*. In this case only the positive-sequence network need be considered

$$I_f = \frac{E_a}{Z_1} = \frac{1.0}{j\,0.538} = -j\,1.86\ pu.$$

You have either reached a page that is unavailable for viewing or reached your viewing limit for this book.

You have either reached a page that is unavailable for viewing or reached your viewing limit for this book.

You have either reached a page that is unavailable for viewing or reached your viewing limit for this book.

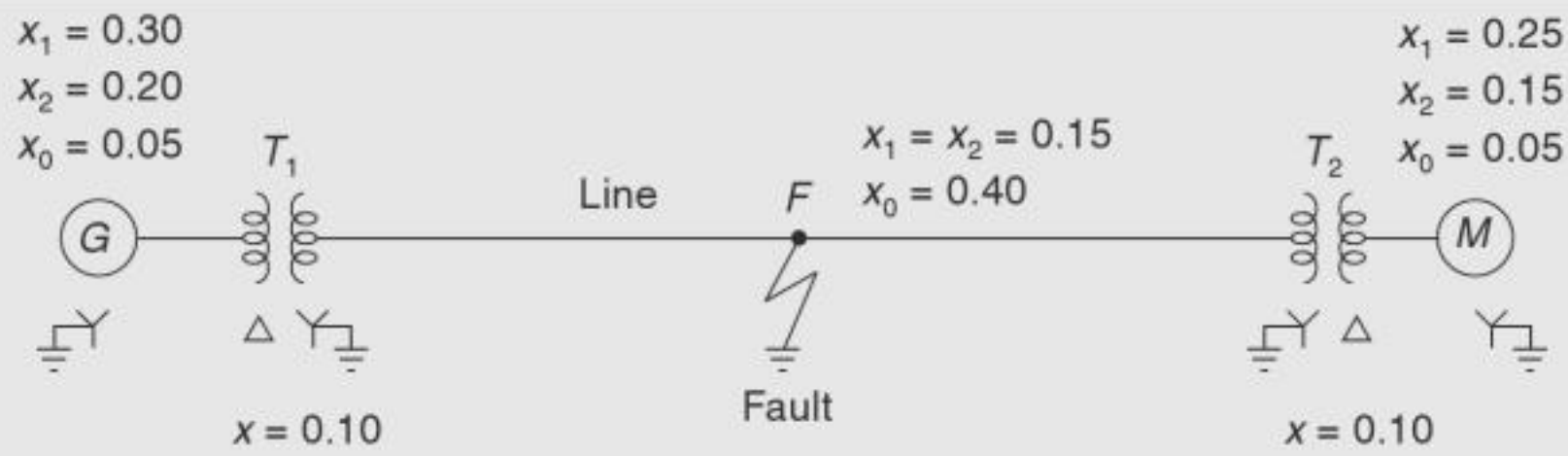

Fig. 4.57 System for Example 4.21

Solution: The sequence reactances of various equipment are tabulated below:

	Positive-Seq. (X_1)	Negative-Seq. (X_2)	Zero-Seq. (X_0)
Generator G	0.30 *pu*	0.20 *pu*	0.05 *pu*
Motor M	0.25 *pu*	0.15 *pu*	0.05 *pu*
Transformer T_1	0.10 *pu*	0.10 *pu*	0.10 *pu*
Transformer T_2	0.10 *pu*	0.10 *pu*	0.10 *pu*
Line	0.15 *pu*	0.15 *pu*	0.40 *pu*

For a fault at middle point of the line, i.e., at F, the sequence networks of the system are shown in Fig. 4.58(a), (b) and (c) and their corresponding Thevenin's equivalent circuits in Fig. 4.59(a), (b) and (c), In the positive sequence network $V_f = E_a$ is shown as the pre-fault voltage at point F.

Thevenin equivalent impedances of each of the sequence network as viewed from the fault point F are calculated from the sequence diagrams:

$$Z_1 = \frac{(j\,0.30 + j\,0.10 + j\,0.075)\,(j\,0.075 + j\,0.10 + j\,0.25)}{(j\,0.475 + j\,0.425)}$$

$$= \frac{j\,0.475 \times j\,0.425}{j\,0.90} = j\,0.224\ pu$$

$$Z_2 = \frac{(j\,0.20 + j\,0.10 + j\,0.075)\,(j\,0.075 + j\,0.10 + j\,0.15)}{(j\,0.375 + j\,0.325)}$$

$$= \frac{j\,0.375 \times j\,0.325}{j\,0.70} = j\,0.174$$

$$Z_0 = \frac{(j\,0.10 + j\,0.20)\,(j\,0.20 + j\,0.10)}{(j\,0.30 + j\,0.30)}$$

$$= \frac{j\,0.30 \times j\,0.30}{j\,0.60} = j\,0.15\ pu$$

Since pre-fault current is to be neglected, the pre-fault voltage at the fault point F, $V_f = E_a = 1.0\ pu$

Copyrighted material

You have either reached a page that is unavailable for viewing or reached your viewing limit for this book.

You have either reached a page that is unavailable for viewing or reached your viewing limit for this book.

You have either reached a page that is unavailable for viewing or reached your viewing limit for this book.

You have either reached a page that is unavailable for viewing or reached your viewing limit for this book.

You have either reached a page that is unavailable for viewing or reached your viewing limit for this book.

Since the fault is of dead short-circuit type, $Z_f = 0$

$$I_{a1} = I_{a2} = I_{a0} = \frac{E_a}{Z_1 + Z_2 + Z_0} = \frac{1.0 < 0°}{j\,(0.15 + 0.10) + (0.471 + j\,0.05)}$$

$$= \frac{1.0 < 0°}{0.471 + j\,0.30} = \frac{1.0 < 0°}{0.558 < 36°} = 1.792 < -36°\ pu$$

Fault current at phase $a = I_a = 3I_{a1} = 3 \times 1.792 = 5.376\ pu$

Actual value of fault current in amperes

$$I_a = 5.376 \times 1255 = 6747 \text{ A}$$

$$I_b = I_c = 0$$

The terminal voltages can be calculated in the following manner:

The sequence voltages are

$$V_{a1} = E_a - I_{a1}Z_1$$

$$V_{a2} = -I_{a2}Z_2 = -I_{a1}Z_2 \qquad (\text{As } I_{a2} = I_{a1})$$

$$V_{a0} = -I_{a0}Z_0 = -I_{a1}Z_0 \qquad (\text{As } I_{a0} = I_{a1})$$

So, line-to-neutral voltages at the terminals during fault are

$$V_a = V_{a1} + V_{a2} + V_{a0} = 0$$

$$V_b = a^2V_{a1} + aV_{a2} + V_{a0}$$

$$V_c = aV_{a1} + a^2V_{a2} + V_{a0}$$

So, the line voltages are

$$V_{ab} = V_a - V_b$$

$$V_{bc} = V_b - V_c$$

$$V_{ca} = V_c - V_a$$

Example 4.24 | Three 6.6 kV, 10 MVA, three-phase, star connected generators are connected to a common set of busbars. Each generator has a reactance to positive sequence current of 18%. The reactance to negative and zero-sequence currents are 75% and 30% of the positive sequence value. If a ground fault occurs on one busbar, determine the fault current (a) if all the generator neutrals are solidly grounded, (b) if only one of the generator's neutral is solidly grounded and others are isolated, and (c) if one of the generator's neutral is grounded through a resistance of 1.5 ohm and the others are isolated.

Solution: Let us assume base quantities to be the rating of the generator. So, base MVA = 10 and base voltage = 6.6 kV (line to line).

$$\text{Base current} = \frac{(\text{MVA})_b \times 10^3}{\sqrt{3}\,(\text{kV})_b} = \frac{10 \times 10^3}{\sqrt{3} \times 6.6} = 875 \text{ A}$$

(a) All the generator neutrals are solidly grounded and a ground fault occurs on one busbar i.e. on one phase (say phase 'a') as shown in Fig. 4.62(a)

Copyrighted material

You have either reached a page that is unavailable for viewing or reached your viewing limit for this book.

You have either reached a page that is unavailable for viewing or reached your viewing limit for this book.

You have either reached a page that is unavailable for viewing or reached your viewing limit for this book.

You have either reached a page that is unavailable for viewing or reached your viewing limit for this book.

You have either reached a page that is unavailable for viewing or reached your viewing limit for this book.

One Conductor Open

Let the conductor a be broken between points $a - a'$ leading to one conductor open condition as shown in Fig. 4.66(a). The system ends on the sides of the fault are identified as F, F', whereas the conductor ends are identified as aa', bb' and cc'.

The current and voltages at the fault point are given by

$$I_a = 0 \tag{4.143}$$

$$V_{bb'} = V_{cc'} = 0 \tag{4.144}$$

The current and voltages in terms of symmetrical components are expressed as

$$I_{a1} + I_{a2} + I_{a0} = 0 \tag{4.145}$$

and

$$\begin{bmatrix} V_{aa'1} \\ V_{aa'2} \\ V_{aa'0} \end{bmatrix} = \frac{1}{3}\begin{bmatrix} 1 & a & a^2 \\ 1 & a^2 & a \\ 1 & 1 & 1 \end{bmatrix}\begin{bmatrix} V_{aa'} \\ 0 \\ 0 \end{bmatrix}$$

or

$$V_{aa'1} = V_{aa'2} = V_{aa'0} = \frac{1}{3} V_{aa'} \tag{4.146}$$

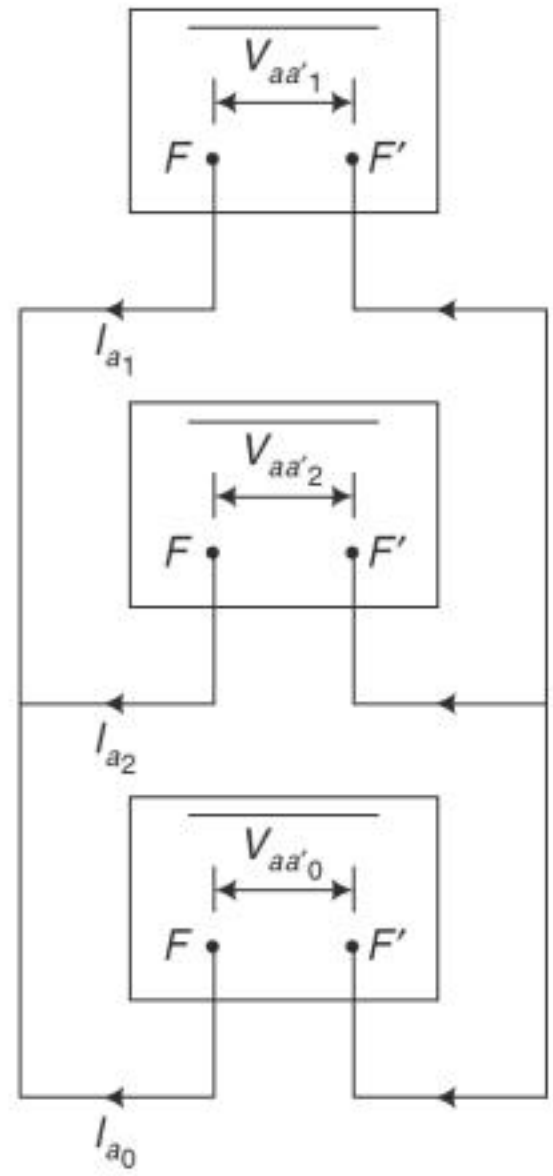

Fig. 4.66(b) *Connection of sequence net works for one conductor open*

Equations (4.145) and (4.146) provide the basis for interconnection of sequence networks in parallel as shown in Fig. 4.67.

Two Conductors Open

Figure 4.67 shows the fault at FF' with conductors b and c open. The currents and voltages under this fault condition are expressed as

$$V_{aa'} = 0 \tag{4.147}$$

$$I_b = I_c = 0 \tag{4.148}$$

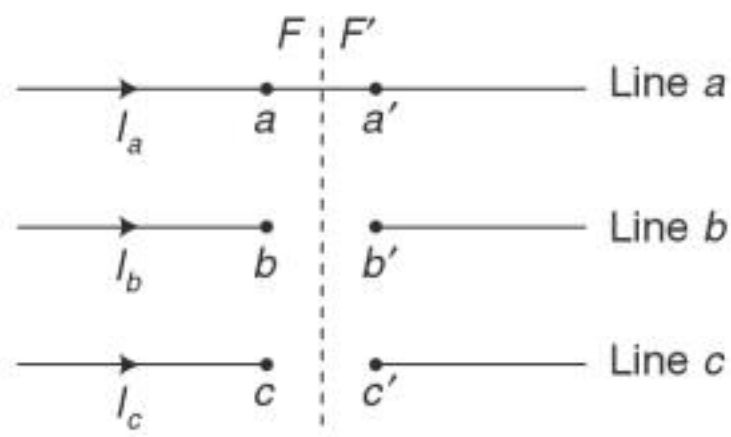

Fig. 4.67 *Two conductors open*

Currents and voltages in terms of symmetrical components can be written as

$$V_{aa'1} + V_{aa'2} + V_{aa'0} = 0 \tag{4.149}$$

and

$$\begin{bmatrix} I_{a1} \\ I_{a2} \\ I_{a0} \end{bmatrix} = \frac{1}{3}\begin{bmatrix} 1 & a & a^2 \\ 1 & a^2 & a \\ 1 & 1 & 1 \end{bmatrix}\begin{bmatrix} I_a \\ 0 \\ 0 \end{bmatrix}$$

or

$$I_{a1} = I_{a2} = I_{a0} = \frac{1}{3} I_a \tag{4.150}$$

Equations (4.159) and (4.150) suggest a series connection of positive, negative and zero sequence networks as shown in Fig. 4.68. Sequence currents and voltage can now be computed.

Copyrighted material

You have either reached a page that is unavailable for viewing or reached your viewing limit for this book.

You have either reached a page that is unavailable for viewing or reached your viewing limit for this book.

You have either reached a page that is unavailable for viewing or reached your viewing limit for this book.

magnitude that the same cannot operate the ground fault relays and hence the ground fault cannot be easily sensed. Due to these disadvantages, ungrounded systems are not used these days.

The modern power systems operate with neutral grounding at every voltage level. In present-day power systems, there are various voltage levels between generation and distribution. It is desirable to provide at least one grounding at each voltage level.

Neutral grounding can be broadly classified into the following two categories:

(i) Effective grounding

(ii) Non-effective grounding

In effective grounding, the neutral is directly connected to ground without inserting any intentional impedance (resistance or reactance). Effective grounding was previously called 'solid grounding'. The coefficient of grounding of effectively grounded system is less than 80%. In non-effective grounding, the neutral is connected to ground through impedance (resistance or reactance). The coefficient of grounding of non-effectively grounded system is greater than 80%.

Ungrounded System

This is power system without an intentional connection to ground. However, it is connected to ground through the natural shunt capacitance of the system to ground. The ungrounded system is also called *isolated neutral system*.

In an isolated neutral system, the voltage of the neutral is not fixed and may float freely. Under balanced system conditions, the voltage of the neutral is held at ground due to the presence of the natural shunt capacitance of the system. The three-phase conductors have, then, the phase voltages with respect to ground. Thus, as shown in Fig. 4.69(a), in the normal balanced system, neutral (N) equals ground (G) and hence, $V_{aN} = V_{aG}$, $V_{bN} = V_{bG}$, and $V_{cN} = V_{cG}$. When a ground fault occurs on any conductor, the phase-to-neutral voltages and the phase-to-ground voltages are quite different.

With a ground fault on any line conductor, the faulted line conductor assumes the voltage of ground and so, the voltage of the neutral with respect to ground attains the voltage of the conductor. This is illustrated in Fig. 4.69(b). The neutral is thus, shifted from ground and the two healthy lines b and c will experience the line voltage (i.e., $\sqrt{3}$ times the phase voltage) with respect to ground.

From Fig. 4.69(b), the voltage drop around the right-hand triangle bGN is given by.

$$V_{bG} - V_{bN} - V_{NG} = 0 \tag{4.151}$$

and around the left-hand triangle CGN

$$V_{CG} - V_{CN} - V_{NG} = 0 \tag{4.152}$$

Also,

$$V_{aN} + V_{NG} = 0 \tag{4.153}$$

From the basic equations,

$$V_{aG} + V_{bG} + V_{cG} = 3\,V_0 \quad \text{(Where, } V_0 = \text{zero-sequence voltage)} \tag{4.154}$$

$$V_{aN} + V_{bN} + V_{cN} = 0 \tag{4.155}$$

Copyrighted material

You have either reached a page that is unavailable for viewing or reached your viewing limit for this book.

You have either reached a page that is unavailable for viewing or reached your viewing limit for this book.

You have either reached a page that is unavailable for viewing or reached your viewing limit for this book.

(iii) The capacitive current in the two healthy phases increases to $\sqrt{3}$ times the normal value.

(iv) The capacitive fault current (I_f) in the faulty phase is 3 times the normal per phase capacitive current.

(v) Persistent arcing ground occurs. Due to arcing ground, the system capacitance is charged and discharged in a cyclic order. This results in high-frequency oscillations being superimposed on the whole system and the phase-voltage of healthy phases may rise to 5 to 6 times its normal value. The overvoltages may result in insulation breakdown.

(vi) The ground fault protection of ungrounded systems becomes difficult because the capacitive fault current is so small in magnitude that it may not be sufficient to operate-protective devices (i.e., ground fault relays).

(vii) Because of the capacitive fault current being small, there will be very little effect on the neighbouring communication circuit. However, the long duration of the arc which may be as long as 30 minutes, may offset this advantage.

In spite of many disadvantages as discussed above, the following are the few advantages of ungrounded (isolated) neutral system.

(i) In case of a single line-to-ground fault, the fault current is very small. Hence, it is possible to maintain the supply with a fault on one line.

(ii) Interference with communication lines is reduced because of the absence of zero sequence currents.

The advantages of ungrounded neutral system are of negligible importance as compared to their disadvantages. With the growth of power systems in terms of power transmitted, voltage level and distance of transmission, many difficulties were being encountered in ungrounded systems. Therefore, ungrounded systems are no more used. The modern power systems operate with neutral grounding at every voltage level.

Grounded System

In order to avoid dangerous and inconvenient situations arising in ungrounded systems during ground faults, the neutrals of the modern power systems are grounded. The systems having their neutrals grounded are called 'grounded systems'. The neutral is grounded either directly or through resistance or reactance. The neutral grounding provides a return path to the zero-seuqence current, and hence the ground fault current in a grounded system may be too large compared to the small capacitive fault current in an ungrounded system. The large ground fault current cannot be allowed to be in the system for a long time and needs to be interrupted by the circuit breaker. In a grounded system, the ground fault current is sufficient to operate the ground fault relays. The advantages of neutral grounding are discussed in the following section.

Advantages of Neutral Grounding

The modern power systems operate with their neutrals grounded. The advantages of the neutral grounding are as follows:

(i) Persistent arcing grounds are eliminated and hence the system is not subjected to overvoltages due to arcing grounds.

Copyrighted material

You have either reached a page that is unavailable for viewing or reached your viewing limit for this book.

You have either reached a page that is unavailable for viewing or reached your viewing limit for this book.

You have either reached a page that is unavailable for viewing or reached your viewing limit for this book.

6. Since the system neutral is almost invariably displaced during ground faults, the equipment require insulation for higher voltages.
7. The system becomes costlier than the effectively grounded system.

(iii) Reactance grounding In this case, the neutral is grounded through impedance, the principal element of which is reactance (i.e., the impedance is having predominant reactance and negligible resistance) as hown in Fig. 4.75. In fact, whether a system is reactance grounded or effectively grounded depends upon the ratio of X_0/X_1. For reactance grounded system, X_0/X_1 ratio is more than 3.0 whereas it is less than 3.0 for effectively grounded system. Reactance grounding lies between effective grounding and resonant grounding. The value of reactance is such that the ground fault current is within safe limits.

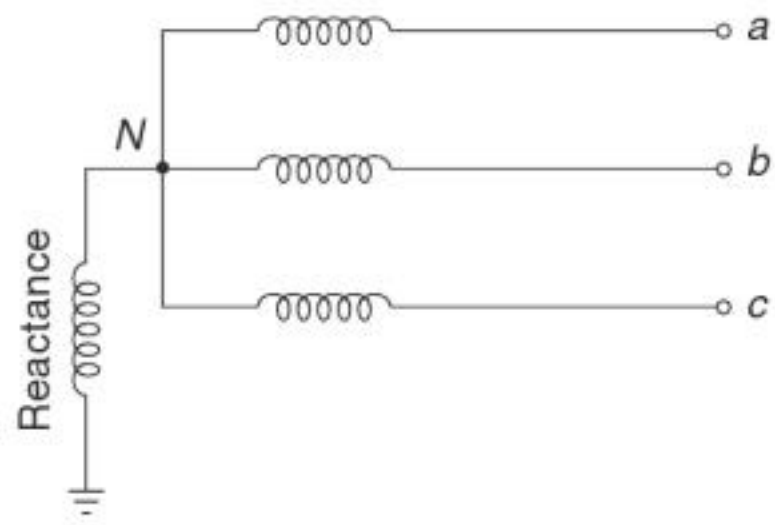

Fig. 4.75 *Reactance grounded system.*

Since reactance grounding provides additional reactance, the capacitive currents are neutralized. Hence this method of neutral grounding may be used for grounding the neutral of circuits and equipment where high charging currents are involved such as transmission lines, underground cables, synchronous motors, synchronous capacitors, etc. For networks where capacitance is relatively low, resistance grounding is preferred.

(iv) Resonant grounding (arc suppressing coil grounding) Resonant grounding is a special case of reactance grounding. In this case an iron-cored reactor connected between the neutral and ground is capable of being tuned to resonate with the capacitance of the system when a line-to-ground (L-G) fault occurs [Fig. 4.76(a)]. The iron-cored reactor is known as arc suppression coil or Peterson coil or ground fault neutralizer. Arc suppression coil (Peterson coil or ground fault neutralizer) is provided with tappings which permit selection of reactance of the coil depending upon the capacitance to be neutralized. The capacitance to be neutralized depends upon the length of the transmission line. The phasor diagram for fault on phase c is shown in Fig. 4.76(b).

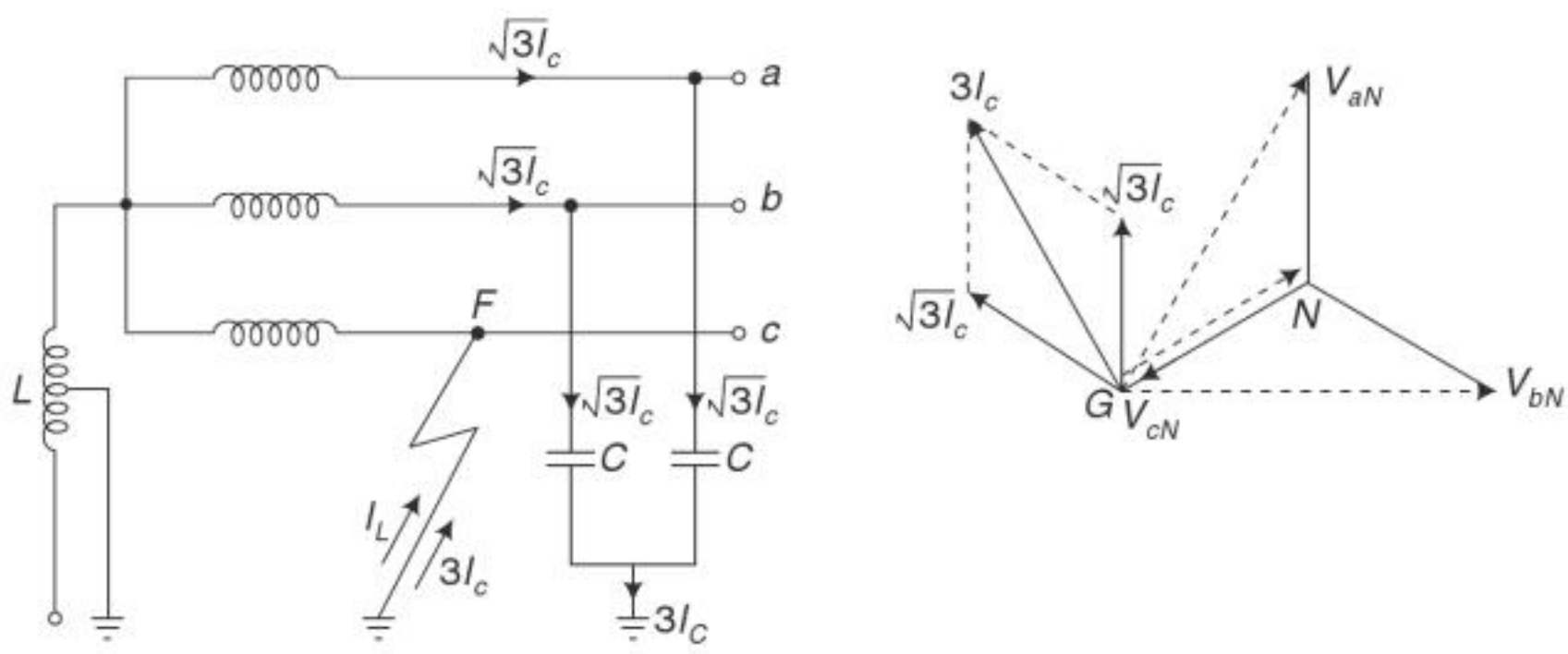

(a) L-G fault on phase c (b) Phasor diagram

Fig. 4.76 *Resonant grounded system.*

You have either reached a page that is unavailable for viewing or reached your viewing limit for this book.

You have either reached a page that is unavailable for viewing or reached your viewing limit for this book.

You have either reached a page that is unavailable for viewing or reached your viewing limit for this book.

deals with grounding of non-current carrying metallic parts of the equipment to ensure safety of personnel and protection against lightning. Equipment grounding is also called 'safety grounding'.

Under fault conditions, the non-current carrying metallic parts of an electrical installation such as frames, enclosures, supports, fencing, etc., may attain high voltages with respect to the ground so that any person or stray animal touching these or approaching these will be subjected to voltage which may result in the flow of a current through the body of the person or the animal of such a value as may prove fatal. The magnitude of the tolerable current flowing through the body is related to duration.

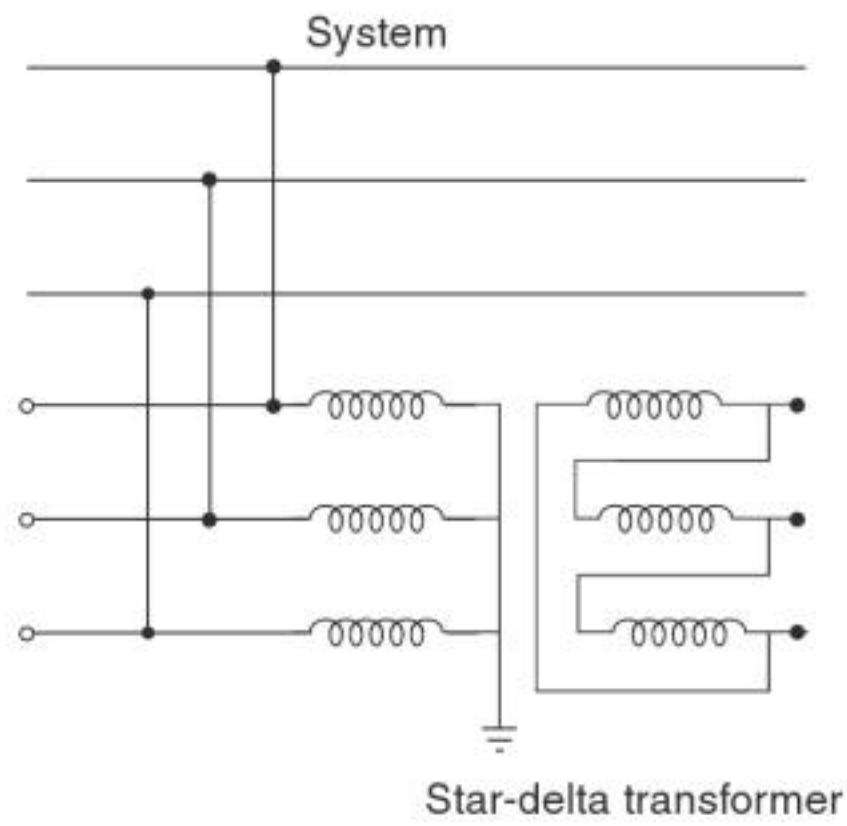

Fig. 4.79(b) *Star-delta trans former for grounding.*

It has been found experimentally that the safe value of the current which a human body can tolerate is given by

$$I_b = \frac{0.165}{\sqrt{t}} \qquad \text{for } t < 3 \text{ secs} \tag{4.164}$$

and

$$I_b = 9 \text{ mA} \qquad \text{for } t > 3 \text{ secs} \tag{4.165}$$

where I_b is the rms value of the body current in amps and t is the time in seconds

Tolerable Step and Touch Voltages

When a fault occurs, the flow of fault current to ground results in voltage gradient on the surface of the ground in the vicinity of the grounding system. This voltage gradient may affect a person in two ways, viz., step or foot to foot contact and hand to both feet or touch contact.

Step voltage

It is the voltage between the feet of a person standing on the floor of the substation, with 0.5 m spacing between two feet (i.e., one step), during the flow of ground fault current through the grounding system. Fig. 4.80 shows the circuit for step contact. R_f is the grounding resistance of one foot (in ohms), and R_b is the resistance of body (in ohms).

The grounding resistance of one foot (R_f) may be assumed to be $3p_s$ where p_s is the resistivity of the soil near the surface of ground. R_b is assumed to be 1000 ohms.

Therefore, tolerable value of the step voltage is given by [from Fig. 4.80(b)].

$$V_{\text{step}} = (R_b + 2R_f)\, I_b \tag{4.166}$$

Substituting the values of R_b, R_f and I_b [from Eqs. (164) and (165)], we get

$$V_{\text{step}} = (1000 + 6p_s)\, 0.165/\sqrt{t} \qquad \text{for } t < 3 \text{ sec} \tag{4.167}$$

$$= (1000 + 6p_s)\, 0.009 \qquad \text{for } t > 3 \text{ sec}$$

You have either reached a page that is unavailable for viewing or reached your viewing limit for this book.

You have either reached a page that is unavailable for viewing or reached your viewing limit for this book.

You have either reached a page that is unavailable for viewing or reached your viewing limit for this book.

16. The section bus bars *A* and *B* in Fig. 4.85 are linked by a bus bar reactor rated at 5 MVA with 10% reactance drop. On bus bar *A* there are two generators each of 10 MVA with 10% reactance and on *B* two generators, each of 8 MVA with 12% reactance. Find the steady MVA load fed into a dead short circuit between all phases on *B* with bus bar reactor in circuit. (**Ans.** 174 MVA)

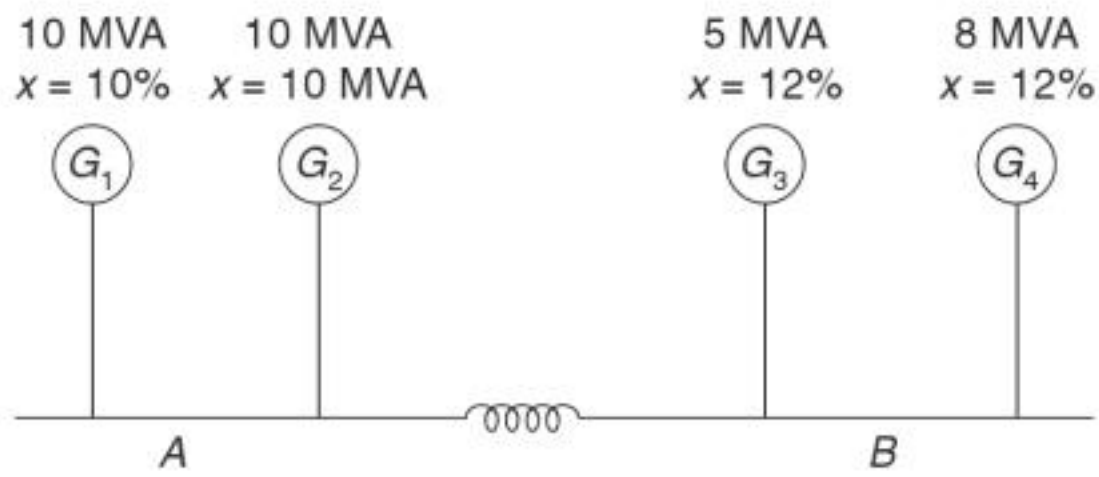

Fig. 4.85

17. Each of the three generators in a generating station has a short circuit reactance of 10% based on the respective ratings of 75 MVA, 90 MVA and 110 MVA. Each machine is connected to its own sectional bus bar and each bus bar is connected to a tiebar through a reactor of 5% reactance based on the rating of the generator connected to it. Calculate the short circuit current in amperes and the MVA fed into the short circuit occurring between the bus bars of the section to which the 110 MVA generator is connected. The generator voltage is 33 kV. (**Ans.** 32,200 A; 1830 MVA)
18. A hydro station has five 80 MVA, 11 kV generators each of 10% reactance connected in parallel. The generated voltage is stepped up to 220 kV by three 160 MVA transformers, each of 15% reactance, also connected in parallel. The 220 kV system supplies power to two sub-stations over two feeders having reactances of 12.1 ohms and 24.2 ohms per phase. Calculate for each sub-station separately, the rms value of the symmetrical fault current when a 3-phase short circuit (fault) occurs at the sub-station. Assume that the generators are not loaded prior to the fault. (**Ans.** 3220 A, 2480 A)
19. For the system shown in Fig. 4.86 determine the fault current and rupturing capacity of the breaker on feeder *C*.

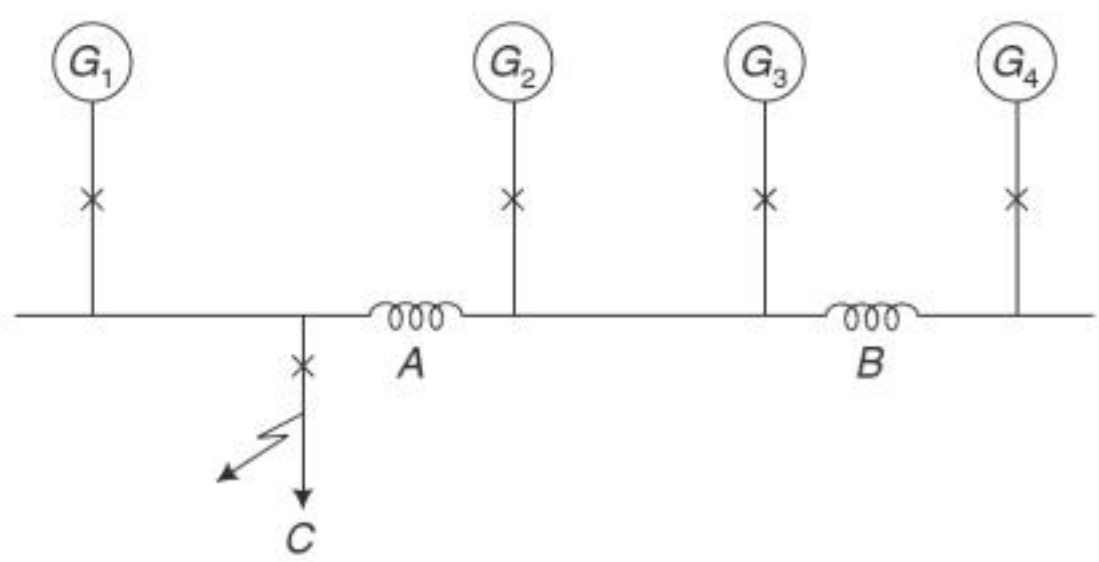

G_1 = 10 MVA, 10%; G_2 = 20 MVA, 15%
G_3 = 20 MVA, 15%; G_4 = 12.5 MVA, 12.5%
A = 8 MVA, 5%; B = 10 MVA, 5%

Fig. 4.86

Copyrighted material

You have either reached a page that is unavailable for viewing or reached your viewing limit for this book.

You have either reached a page that is unavailable for viewing or reached your viewing limit for this book.

You have either reached a page that is unavailable for viewing or reached your viewing limit for this book.

5 Overcurrent Protection

5.1 INTRODUCTION

A protective relay which operates when the load current exceeds a preset value, is called an *overcurrent relay*. The value of the preset current above which the relay operates is known as its pick-up value. Overcurrent relays offer the cheapest and simplest form of protection. These relays are used for the protection of distribution lines, large motors, power equipment, industrial systems, etc. Overcurrent relays are also used on some subtransmission lines which cannot justify more expensive protection such as distance or pilot relays. A scheme which incorporates overcurrent relays for the protection of an element of a power system, is known as an overcurrent protection scheme or overcurrent protection. An overcurrent protection scheme may include one or more overcurrent relays.

At present, electromechanical relays are widely used for overcurrent protection. The induction disc type construction, as shown in Fig. 2.9(b) is commonly used. With the development of numerical relays based on microprocessors or micorcontrollers, there is a growing trend to use numerical overcurrent relays for overcurrent protection.

5.2 TIME-CURRENT CHARACTERISTICS

A wide variety of time-current characteristics is available for overcurrent relays. The name assigned to an overcurrent relay indicates its time-current characteristic as describe below.

5.2.1 Definite-time Overcurrent Relay

A definite-time overcurrent relay operates after a predetermined time when the current exceeds its pick-up value. Curve (a) of Fig. 5.1 shows the time-current characteristic for this type of relay. The operating time is constant, irrespective of the magnitude of the current above the pick-up value. The desired definite operating time can be set with the help of an intentional time-delay mechanism provided in the relaying unit.

5.2.2 Instantaneous Overcurrent Relay

An instantaneous relay operates in a definite time when the current exceeds its pick-up value. The operating time is constant, irrespective of the magnitude of the current, as shown by the curve (a) of Fig. 5.1. There is no intentional time-delay. It operates

Copyrighted material

You have either reached a page that is unavailable for viewing or reached your viewing limit for this book.

You have either reached a page that is unavailable for viewing or reached your viewing limit for this book.

You have either reached a page that is unavailable for viewing or reached your viewing limit for this book.

5.3 CURRENT SETTING

The current above which an overcurrent relay should operate can be set. Suppose that a relay is set at 5 A. It will then operate if the current exceeds 5 A. Below 5 A, the relay will not operate. There are a number of tappings on the current coil, available for current setting, as shown in Fig. 2.9 and Fig. 2.10. The operation of the relay requires a certain flux and ampere turns. The current settings of the relay are chosen by altering the number of turns of the current coil by means of a plug PS in Fig. 2.9 and 2.10. The plug-setting (current-setting) can either be given directly in amperes or indirectly as percentages of the rated current. An overcurrent relay which is used for phase-to-phase fault protection, can be set at 50% to 200% of the rated current in steps of 25%. The usual current rating of this relay is 5 A. So it can be set at 2.5 A, 3.75 A, 5 A, ..., 10 A. When a relay is set at 2.5 A, it will operate when current exceeds 2.5 A. When the relay is set at 10 A, it will operate when current exceeds 10 A. The relay which is used for protection against ground faults (earth-fault relay) has settings 20% to 80% of the rated current in steps of 10%. The current rating of an earth-fault relay is usually 1 A.

If time-current curves are drawn, taking current in amperes on the *X*-axis, there will be one graph for each setting of the relay. To avoid this complex situation, the plug setting multipliers are taken on the *X*-axis. The actual r.m.s. current flowing in the relay expressed as a multiple of the setting current (pickup current) is known as the plug setting multiplier (PSM). Suppose, the rating of a relay is 5 A and it is set at 200%, i.e. at 10 A. If the current flowing through the relay is 100 A, then the plug setting multiplier will be 10. The PSM = 4 means 40 A of current is flowing, PSM = 6 means 60 A of current is flowing and so on.

If the same relay is set at 50%, i.e. at 2.5 A, the PSM = 4 means 10 A; PSM = 6 means 15 A; PSM = 10 means 25 A and so on.

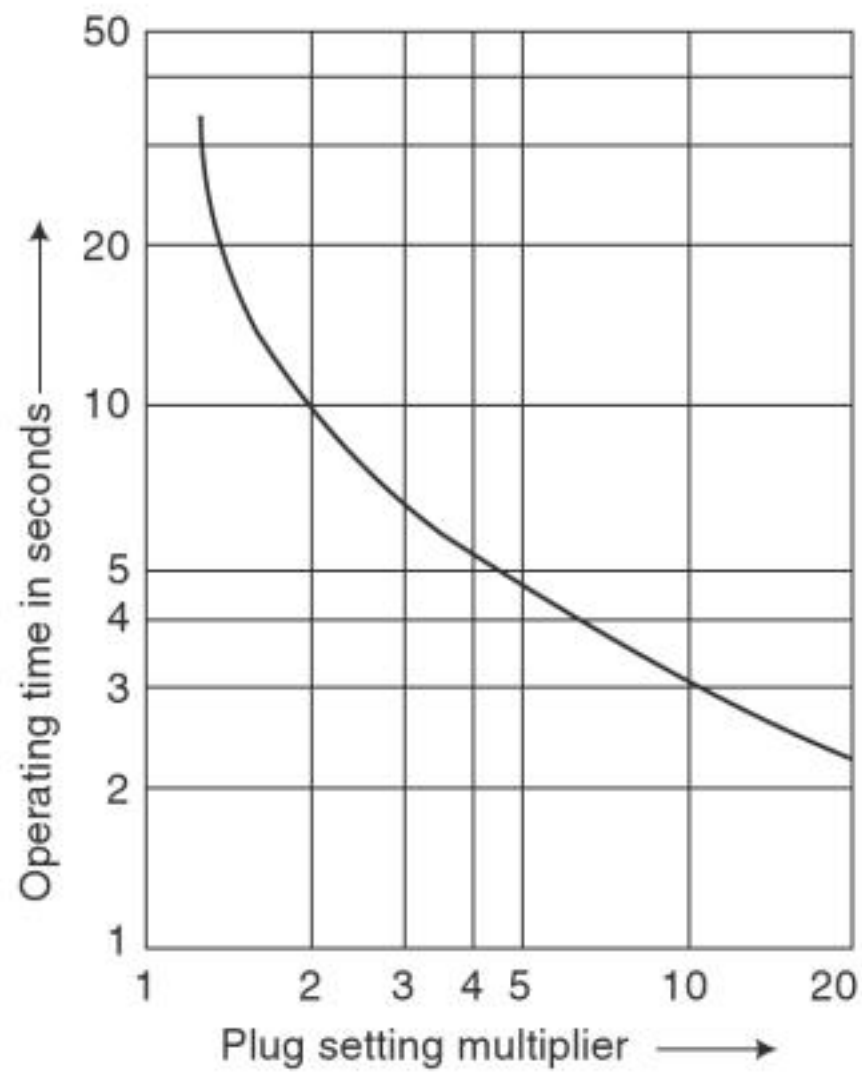

Fig. 5.3 *Standard I.D.M.T. characteristic*

Hence, PSM can be expressed as

$$\text{PSM} = \frac{\text{Secondary current}}{\text{Relay current setting}}$$

$$= \frac{\text{Primary current during fault, i.e. fault current}}{\text{Relay current setting} \times \text{CT ratio}}$$

While plotting the time-current characteristic, if PSM is taken on the *X*-axis, there will be only one curve for all the settings of the relay. Figure 5.3 shows a time-current characteristic with PSM on the *X*-axis. The curve is generally plotted on log/log

You have either reached a page that is unavailable for viewing or reached your viewing limit for this book.

You have either reached a page that is unavailable for viewing or reached your viewing limit for this book.

You have either reached a page that is unavailable for viewing or reached your viewing limit for this book.

The drawback of this scheme is that for faults near the power source, the operating time is more. If a fault occurs near the power source, it involves a large current and hence it should be cleared quickly. But this scheme takes the longest time in clearing the heaviest fault, which is undesirable because the heaviest fault is the most destructive.

This scheme is suitable for a system where the impedance (distance) between substations is low. It means that the fault current is practically the same if a fault occurs on any section of the feeder. This is true for a system in which the source impedance Z_s is more than the impedance of the protected section, Z_1. If the neutral of the system is grounded through a resistance or an impedance, Z_s is high and $Z_s/(Z_s + Z_1)$ is not sufficiently lower than unity. In this situation, the advantage of inverse-time characteristic cannot be obtained. So definite relays can be employed, which are cheaper than I.D.M.T. relays. Definite-time relays are popular in Central Europe.

5.5.2 Current-graded System

In a current-graded scheme, the relays are set to pick-up at progressively higher values of current towards the source. The relays employed in this scheme are high set (high speed) instantaneous overcurrent relays. The operating time is kept the same for all relays used to protect different sections of the feeder, as shown in Fig. 5.6. The current setting for a relay corresponds to the fault current level for the feeder section to be protected.

Ideally, the relay at *B* should trip for faults any where between *B* and *C*. But it should not operate for faults beyond *C*. Similarly, the relay at *A* should trip for faults between *A* and *B*. The relay at *C* should trip for faults beyond *C*. This ideal operation is not achieved due to the following reasons.

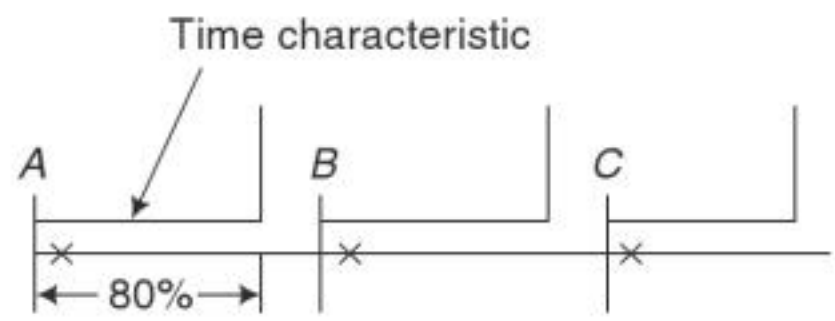

Fig. 5.6 *Instantaneous overcurrent protection of a feeder*

(i) The relay at *A* is not able to differentiate between faults very close to *B* which may be on either side of *B*. If a fault in the section *BC* is very close to the station *B*, the relay at *A* 'understands' that it is in section *AB*. This happens due to the fact that there is very little difference in fault currents if a fault occurs at the end of the section *AB* or in the beginning of the section *BC*.

(ii) The magnitude of the fault current cannot be accurately determined as all the circuit parameters may not be known.

(iii) During a fault, there is a transient conditions and the performance of the relays is not accurate.

Consequently, to obtain proper discrimination, relays are set to protect only a part of the feeder, usually about 80%. Since this scheme cannot protect the entire feeder, this system is not used alone. It may be used in conjunction with I.D.M.T. relays, as shown in Fig. 5.7.

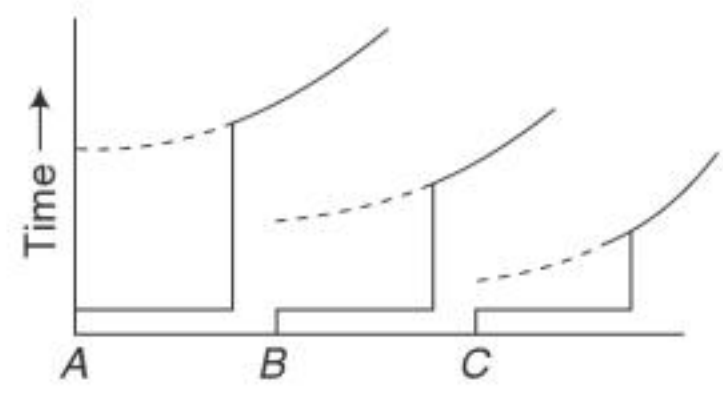

Fig. 5.7 *Combined instantaneous and I.D.M.T. protection*

The performance of instantaneous relays is affected by the dc component of transients. The

You have either reached a page that is unavailable for viewing or reached your viewing limit for this book.

You have either reached a page that is unavailable for viewing or reached your viewing limit for this book.

You have either reached a page that is unavailable for viewing or reached your viewing limit for this book.

But, actual operating time required

= Operating time of feeder relay + discriminative time margin

= 1.12 sec + 0.50 sec

= 1.62 sec

Hence required time multiplier setting (TMS) = 1.62/4.7 = 0.345

Example 5.4 | Two relays R_1 and R_2 are connected in two sections of a feeder as shown in Fig. 5.9. CTs are of ratio 1000/5 A. The plug setting of relay R_1 is 100% and R_2 is 125%. The operating time characteristics of the relays is same as given in Table 5.3 of Example 5.1.

The time multiplier setting of the relay R_1 is 0.3. The time grading scheme has a discriminative time margin of 0.5 s between the relays. A three-phase short circuit at F results in a fault current of 5000 A. Find the actual operating times of R_1 and R_2. What is the time multiplier setting (TMS) of R_2.

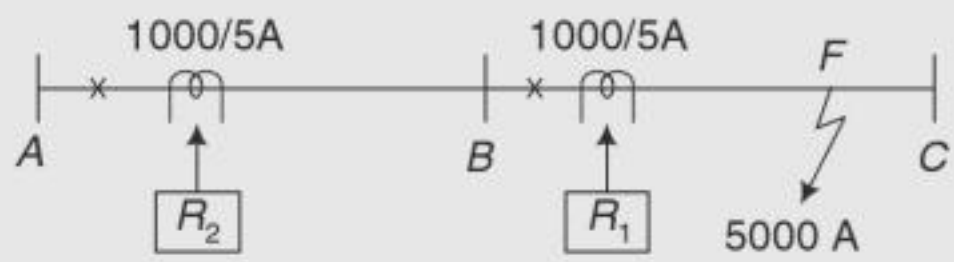

Fig. 5.9 System for Example 5.4

Solution: CT secondary current = $5000 \times \frac{5}{1000} = 25$ A

Relay R_1

Plug setting = 100%

Current setting = 5 A

$$\text{PSM of } R_1 = \frac{\text{Secondary current}}{\text{Relay current setting}} = \frac{25}{5} = 5$$

Operating time of the relay at PSM of 5 and TMS of 1 from the table of Example 5.1 = 4 seconds.

Since TMS of the relay R_1 is 0.3, the actual operating time of the relay = 0.3 × 4 = 0.3 × 4 = 1.2 seconds

Relay R_2

Plug setting = 125%

Relay current setting = 125% of 5 A = 1.25 × 5 = 6.25 A

$$\text{PSM} = \frac{\text{Secondary current}}{\text{Relay current setting}} = \frac{25}{6.25} = 4$$

Operating time at PSM of 4 and TMS of 1 from the table of Example 5.1 = 5 seconds

Actual operating time of R_2 = Operating time of R_1 + time grading margin

= 1.2 + 0.5

= 1.7 seconds

Hence, TMS = 1.7/5 = 0.34

Copyrighted material

You have either reached a page that is unavailable for viewing or reached your viewing limit for this book.

You have either reached a page that is unavailable for viewing or reached your viewing limit for this book.

You have either reached a page that is unavailable for viewing or reached your viewing limit for this book.

directional unit operates, it closes the open contacts of the secondary winding of the overcurrent unit. Thus, a directional feature is attributed to the overcurrent relay. The overcurrent unit may be of either a wattmeter or shaded pole type. In shaded pole type, the opening is made in the shading coil which is in this case a wound coil instead of an ordinary copper strip.

5.7 PROTECTION OF PARALLEL FEEDERS

Figure 5.15 shows an overcurrent protective scheme for parallel feeders. At the sending end of the feeders (at A and B), non-directional relays are required. The symbol ↔ indicates a non-directional relay. At the other end of feeders (at C and D), directional overcurrent relays are required. The arrow mark for directional relays placed at C and D indicate that the relay will operate if current flows in the direction shown by the arrow. If a fault occurs at F, the directional relay at D trips, as the direction of the current is reversed. The relay at C does not trip, as the current flows in the normal direction. The relay at B trips for a fault at F. Thus, the faulty feeder is isolated and the supply of the healthy feeder is maintained.

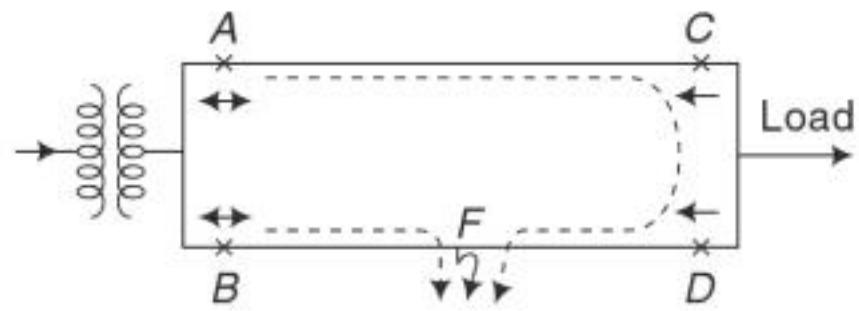

Fig. 5.15 *Protective scheme for parallel feeder*

If non-directional relays are used at C and D, both relays placed at C and D will trip for a fault at F. This is not desired as the healthy feeder is also tripped. Due to this very reason relays at C and D are directional overcurrent relays. For faults at feeders, the direction of current at A and B does not change and hence relays used at A and B are non-directional.

5.8 PROTECTION OF RING MAINS

Figure 5.16(a) shows an overcurrent scheme for the protection of a ring feeder. Figure 5.16(b) is another way of drawing the same scheme. Compared with radial feeders, the protection of ring feeders is costly and complex. Each feeder requires two relays. A non-directional relay is required at one end and a directional relay at the other end. The operating times for relays are determined by considering the grading, first in one direction and then in the other direction, as shown in Fig. 5.16.

If a fault occurs at F_1 as shown in Fig. 5.16(a), the relays at C' and D' will trip to isolate the faulty feeder. The relay at C will not trip as the fault current is not flowing in its tripping direction though its operating time is the same as that of C'. Similarly, the relays at B and D will not trip as the fault currents are not in their tripping direction, though their operating time is less than the operating time of B' and D' respectively. Figure 5.16(b) is an alternative way of drawing the same scheme. In this figure, loads, though present are not shown on buses A, B and D so as to make the figure simple to understand. If a fault occurs at F_2, the relays at A' and D will trip.

Fig. 5.16(c) shows a scheme involving even greater number of feeders.

Copyrighted material

You have either reached a page that is unavailable for viewing or reached your viewing limit for this book.

You have either reached a page that is unavailable for viewing or reached your viewing limit for this book.

You have either reached a page that is unavailable for viewing or reached your viewing limit for this book.

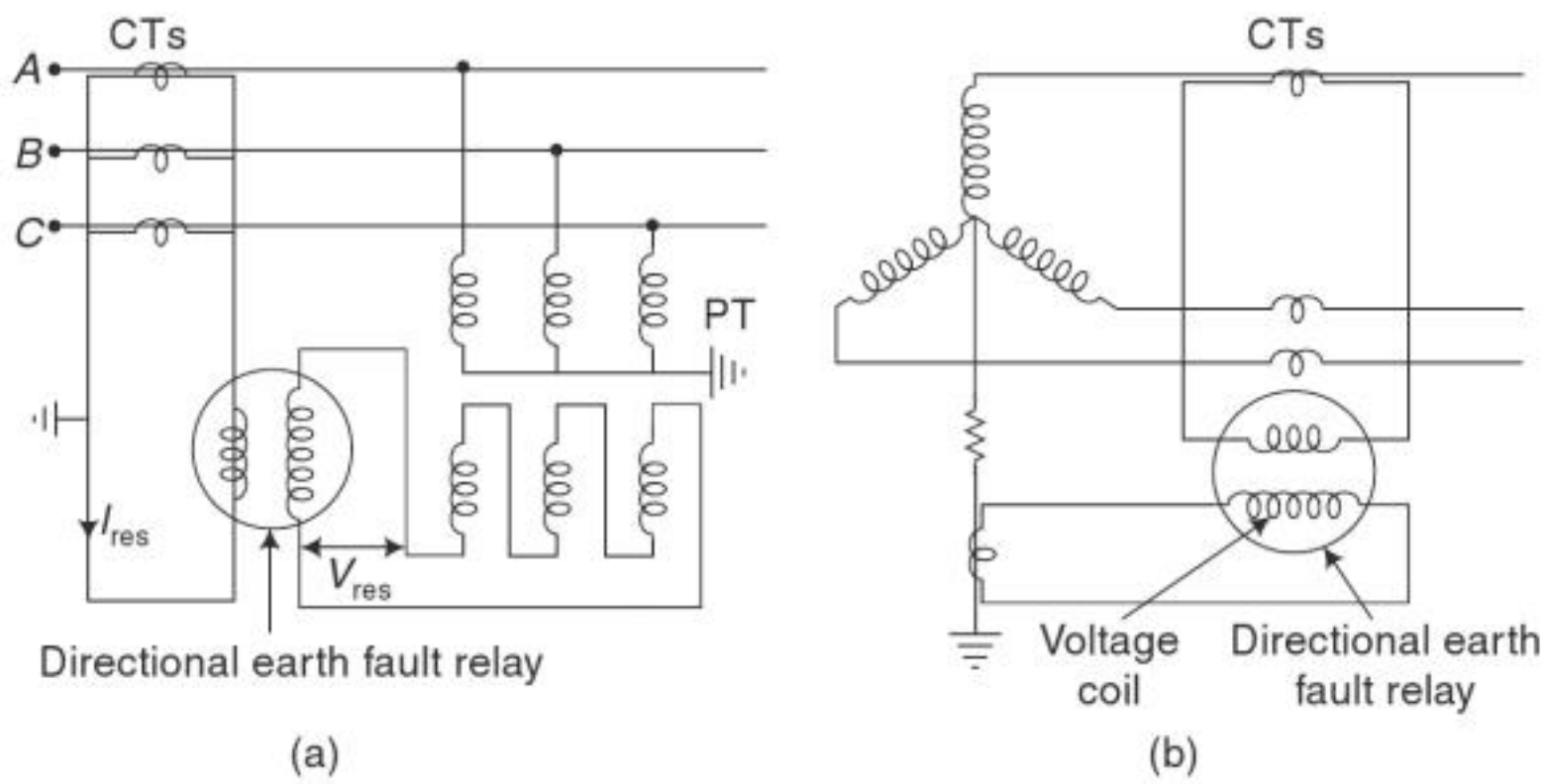

Fig. 5.20 *Connection of a directional earth fault relay*

made as shown in Fig. 5.20(b). If the neutral point is grounded through a VT, the voltage coil of the directional earth fault relay may be connected to the secondary of the VT. The I.D.M.T. element has a plug setting of 20% to 80%.

A special five limbs VT which can energise both the earth fault relay as well as the phase fault relays, as shown in Fig. 5.21, may be used.

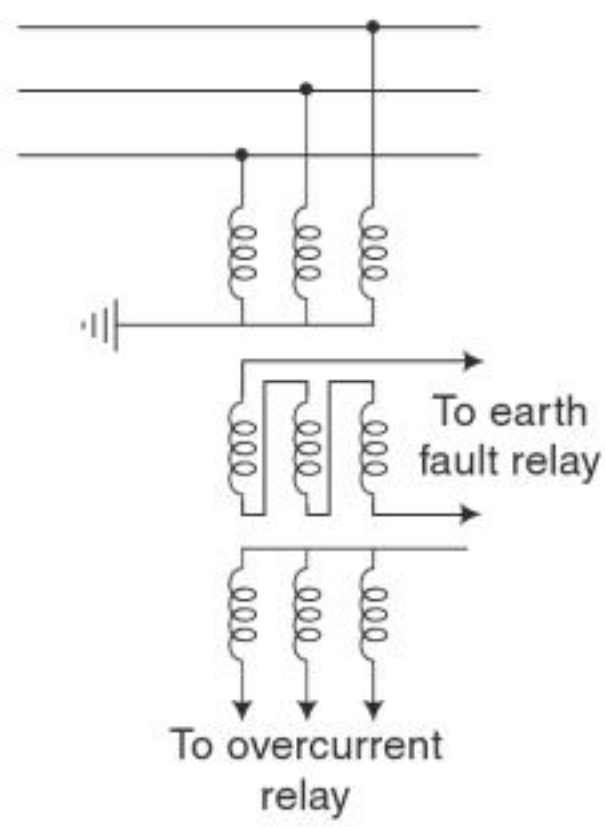

Fig. 5.21 *Five limb VT*

5.13 STATIC OVERCURRENT RELAYS

The general expression for the operating time of a time-current relay is

$$t = \frac{K}{I^n - 1}$$

Inverse time electromagnetic relays produce time-current curves according to this law only up to a few times the CT rating because of magnetic saturation. The time-current characteristic does not follow a simple mathematical equation and it is very difficult to obtain consistency between the characteristics of individual relays. The time-current characteristic of static relays depends on the *R-C* circuit which can be precisely controlled. In the static relays circuit, components are linear, thereby it becomes easier to produce characteristics according to the above law. With an electromagnetic unit, the maximum value of n which is the index of I may be only up to 2. With static relay time-current characteristic with higher values of n can easily be realised. The characteristic of the form $t = K/I^n$ can be realised which will give straight line characteristic on log t/log I graph. Since the time-current characteristics, given by $t = K/I^n$ are not asymptotic to the pick-up value of the current, a separate device to control pick-up is required. Similarly, for an I.D.M.T. relay, a separate unit will provide the definite time portion of the characteristic. With straight line curves there is a great saving in computing relay time settings.

You have either reached a page that is unavailable for viewing or reached your viewing limit for this book.

You have either reached a page that is unavailable for viewing or reached your viewing limit for this book.

You have either reached a page that is unavailable for viewing or reached your viewing limit for this book.

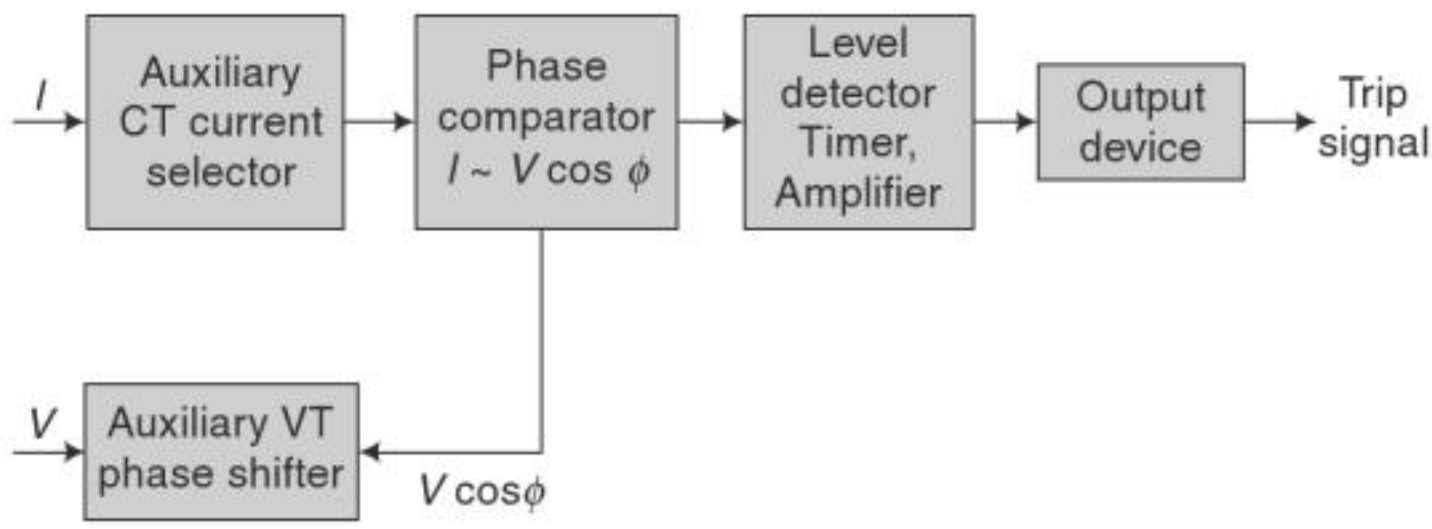

Fig. 5.25 *Simplified block diagram of static directional overcurrent relay*

5.14 NUMERICAL OVERCURRENT RELAYS

Numerical overcurrent relays are the latest development in the area of protection. These relays have been developed because of tremendous advancement in VLSI and computer hardware technology. A numerical overcurrent relay acquires sequential samples of the current signal (i.e., proportional voltage signal) in numeric (digital) data form through the data acquisition system (DAS) and processes the data numerically using a numerical filtering algorithm to extract the fundamental frequency component of the current and make trip decisions. Depending on the processor and processing tool used for processing of the current signal, numerical overcurrent relays are of the following types:

(i) Microprocessor-based overcurrent relays
(ii) Microcontroller-based overcurrent relays
(iii) Digital Signal Processor (DSP)-based overcurrent relays
(iv) Field Programmable Gate Arrays (FPGA)-based overcurrent relays.
(v) Artificial Neural Network (ANN) based numerical relays.

A protection scheme which incorporates numerical overcurrent relays for the protection of an element of a power system, is known as a numerical overcurrent protection scheme or numerical overcurrent protection.

5.14.1 Microprocessor-based Overcurrent Relays

Modern power networks require faster, more accurate and reliable protective schemes. Microprocessor-based protective schemes are capable of fulfilling these requirements. They are superior to electromechanical and static relays. These schemes have more flexibility due to their programmable approach when compared with static relays which have hardwired circuitry. With the same interfacing circuitry, a number of characteristics can be realised using different programs. Microprocessor-based schemes are more compact, accurate, reliable and fast.

There are two methods to realise overcurrent characteristics. One method employs a precision rectifier to convert ac signals to dc signals. Since the microprocessor-based system cannot process current signals, a voltage signal proportional to load current is obtained. The ac voltage signal is rectified and then converted to a digital

You have either reached a page that is unavailable for viewing or reached your viewing limit for this book.

You have either reached a page that is unavailable for viewing or reached your viewing limit for this book.

You have either reached a page that is unavailable for viewing or reached your viewing limit for this book.

6 Distance Protection

6.1 INTRODUCTION

Distance protection is a widely used protective scheme for the protection of high and extra high voltage (EHV) transmission and sub-transmission lines. This scheme employs a number of distance relays which measure the impedance or some components of the line impedance at the relay location. The measured quantity is proportional to the line-length between the location of the relay and the point where the fault has occurred. As the measured quantity is proportional to the distance along the line, the measuring relay is called a distance relay. Overcurrent relays have been found unsuitable for the protection of transmission lines because of their inherent drawbacks of variable reach and variable operating time due to changes in source impedance and fault type. Distance relays have been developed to overcome the problems associated with the use of overcurrent relays for the protection of transmission lines.

Modern distance relays provide high speed fault clearance. They are used where overcurrent relays become slow, and there is difficulty in grading time-overcurrent relays for complicated networks. They are used for the protection of transmission and subtransmission lines at 220 kV, 132 kV, 66 kV, and 33 kV. Sometimes, they are also used at 11 kV. For 132 kV and 220 kV systems, the recent trend is to use carrier current protection. The relaying units used in carrier current protection are distance relays. They operate under the control of carrier signals. In case of the failure of carrier signal, they act as back-up protection.

A distance protection scheme is a non-unit system of protection. A single scheme provides both primary and back-up protection.

The most important and versatile family of relays is the distance-relay group. It includes the following types:

(i) Impedance relays
(ii) Reactance relays
(iii) MHO relays
(iv) Angle impedance relays
(v) Quadrilateral relays
(vi) Elliptical and other conic section relays

Copyrighted material

You have either reached a page that is unavailable for viewing or reached your viewing limit for this book.

You have either reached a page that is unavailable for viewing or reached your viewing limit for this book.

You have either reached a page that is unavailable for viewing or reached your viewing limit for this book.

The directional relay employs two pairs of contacts, one pair is placed in series with the contacts of the impedance relay. The other pair is connected to energise an auxiliary relay. The contacts of the auxiliary relay, when deenergised, short circuit the current coil of the impedance relay. The contacts of the auxiliary relay are opened when a fault occurs in the forward direction. This type of a control is essential to avoid a contact race between the impedance relay and the directional relay in interconnected or double circuit lines. See details in Ref. 5.

6.2.4 Protective Scheme Using Impedance Relays

Three units of impedance relays are required at a particular location for three zones of protection. It is normal practice to adjust the first unit to protect only up to 80%-90% of the protected line. The protected zone of the first unit is called the first zone of protection. It is a high speed unit and is used for the primary protection of the protected line. Its operation is instantaneous; about 1 to 2 cycles. This unit is not set to protect the entire line to avoid undesired tripping due to overreach. If the relay operates for a fault beyond the protected line, this phenomenon is called overreach. Overreach may occur due to transients during the fault condition.

The main purpose of the second unit is to protect the rest of the protected line, which is beyond the reach of the first unit. The setting of the second unit is so adjusted that it operates the relay even for arcing faults at the end of the line. To achieve this, the unit must reach beyond the end of the line. In other words, its setting must take care of underreach caused by arc resistance. Underreach is also caused by intermediate current sources, errors in data available for initial setting of the relay and errors in CT, VT and measurements performed by the relay. To take into account the underreaching tendency caused by these factors, the normal practice is to set the second zone reach up to 50% of the shortest adjoining line section. The protective zone of the second unit is known as the second zone of protection. The second zone unit operates after a certain time delay. Its operating time is usually 0.2 s to 0.5 s.

The third zone of protection is provided for back-up protection of the adjoining line. Its reach should extend beyond the end of the adjoining line under the maximum underreach which may be caused by arcs, intermediate current sources and errors in CT, VT and measuring units. The protective zone of the third stage is known as the third zone of protection. The setting of the third zone covers the first line, i.e. the protected line plus the longest second line plus 25% of the third line. The time-delay for the third unit is usually 0.4 s to 1 s. Figure 6.6 shows the operating time of impedance relays and is known as the stepped time-distance characteristic. A_1, A_2 and A_3 are operating times for the I, II, and III zone relays (placed at A) respectively. Similarly, B_1, B_2, B_3 are operating times for the I, II, and III zone relays, placed at B, respectively. Because of the cost factor and the panel space, it is not

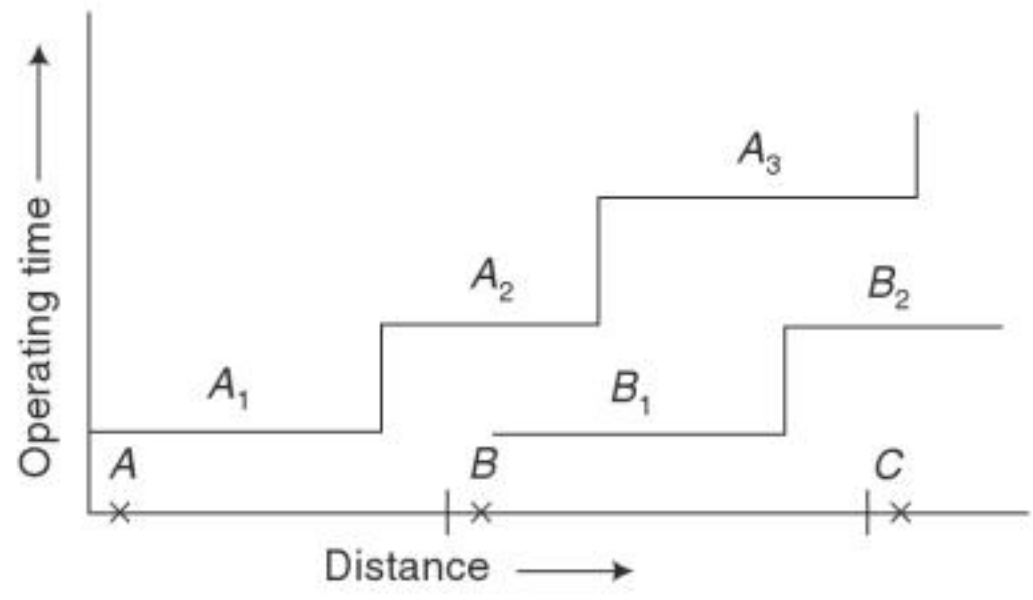

Fig. 6.6 *Stepped time-distance characteristics of impedance relays*

You have either reached a page that is unavailable for viewing or reached your viewing limit for this book.

You have either reached a page that is unavailable for viewing or reached your viewing limit for this book.

You have either reached a page that is unavailable for viewing or reached your viewing limit for this book.

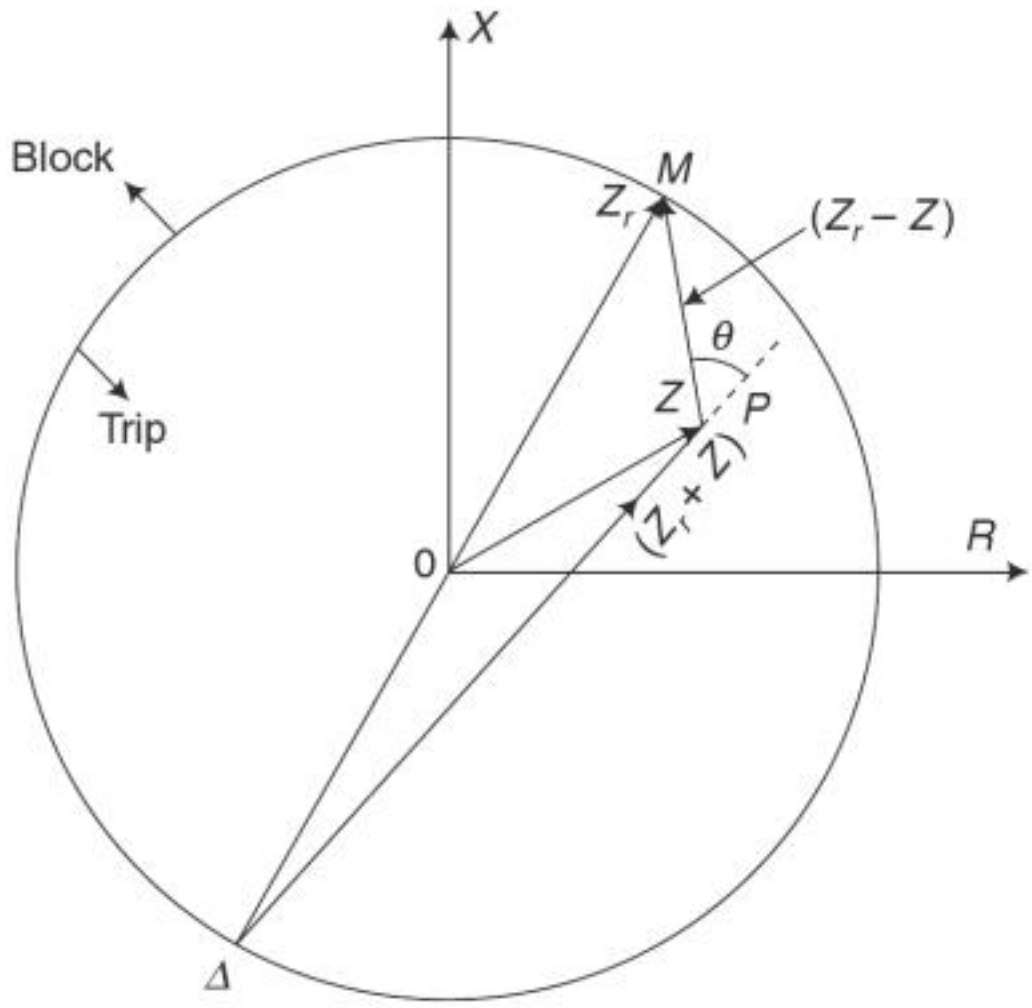

Fig. 6.12 *Impedance relay*

6.2.10 Microprocessor-based Impedance Relay

The microprocessor computes line impedance at relay locations using I_{rms} and V_{rms}. There are a number of techniques which can be used for this type of computation. One of the techniques uses I_{dc} and V_{dc} for computation as these are proportional to I_{rms} and V_{rms}. V_{ac} and I_{ac} are rectified using rectifiers to obtain V_{dc} and I_{dc}. These rectifiers employ ICs and diodes. Now line impedance is computed and the microprocessor issues a trip signal to the circuit breaker if the fault point lies within its protected section.

In another method, the microprocessor takes samples of the voltage and current signals over half a cycle or one full cycle to compute V_{rms} and I_{rms}. Then the line impedance is computed from these quantities. If the fault point lies within the protected section, a trip signal is issued.

After taking samples, the microprocessor may use digital filter techniques to compute R and X at the relay location and take a decision to trip the circuit breaker if the fault point lies within the protected section. See details of microprocessor impedance relay in Chap. 12.

6.2.11 Modified Impedance Relay

Figure 6.13 shows the characteristics of a modified impedance relay. Its characteristic is a circle on the R-X diagram. It is similar to that of an impedance relay but has a shifted characteristic. To realise a modified impedance characteristic, the standard impedance characteristic is shifted outwards along the R-axis by a current bias. This is

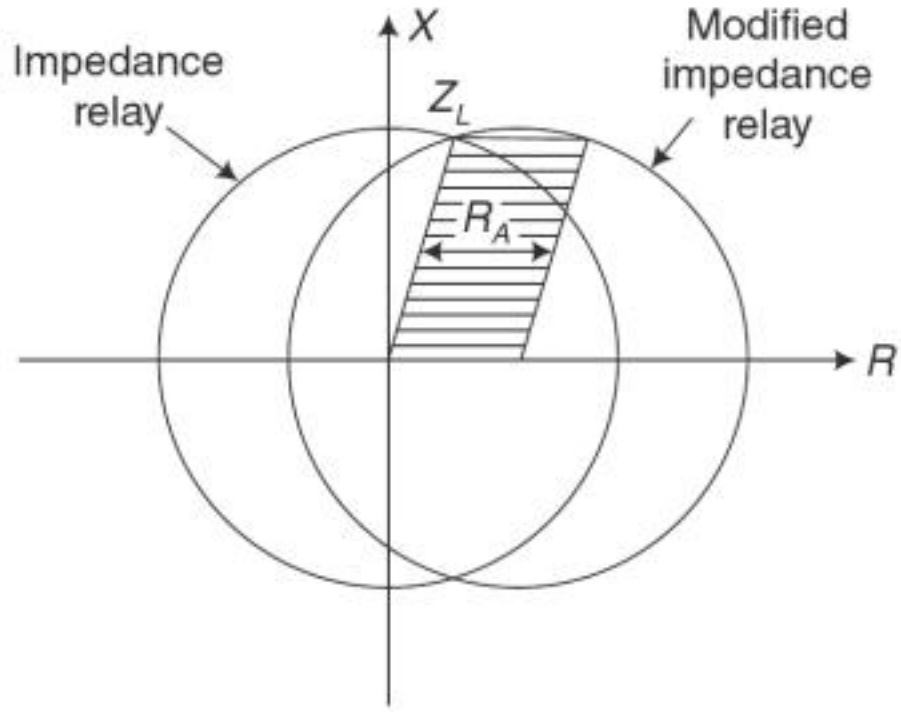

Fig. 6.13 *Modified impedance relay*

You have either reached a page that is unavailable for viewing or reached your viewing limit for this book.

You have either reached a page that is unavailable for viewing or reached your viewing limit for this book.

You have either reached a page that is unavailable for viewing or reached your viewing limit for this book.

The reactance relay characteristic can also be realised if the phase angle between IX_r and $(IX_r - V)$ is compared with ± 90°. The vector diagram for this condition has been shown in Fig 6.19

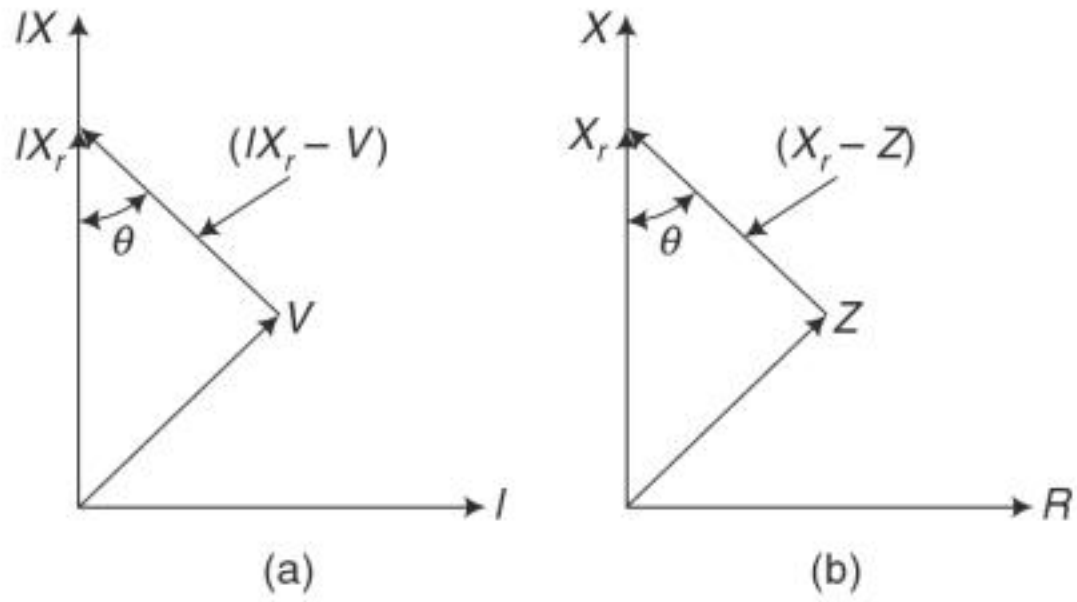

Fig. 6.19 *Realisation of reactance relay by comparing IX_r and $(IX_r - V)$*

6.3.4 Microprocessor-based Reactance Relay

A reactance relay can be realised using a microprocessor by comparing I_{dc} with $V \sin \phi$. Alternatively, X can be measured at the relay location using differential equations, Fast Fourier transforms, walsh functions or any other digital technique and it may be compared with the preset value of X. More details are given in Chap. 12.

6.4 MHO (ADMITTANCE OR ANGLE ADMITTANCE) RELAY

A MHO relay measures a component of admittance $|Y| \angle\theta$. But its characteristic, when plotted on the impedance diagram (R-X diagram) is a circle, passing through the origin. It is inherently a directional relays as it detects the fault only in the forward direction. This is obvious from its circular characteristic passing through the origin, as shown in Fig. 6.20. It is also called an admittance or angle admittance relay. It is called a MHO relay because its characteristic is a straight line when plotted on an admittance diagram (G-B axes).

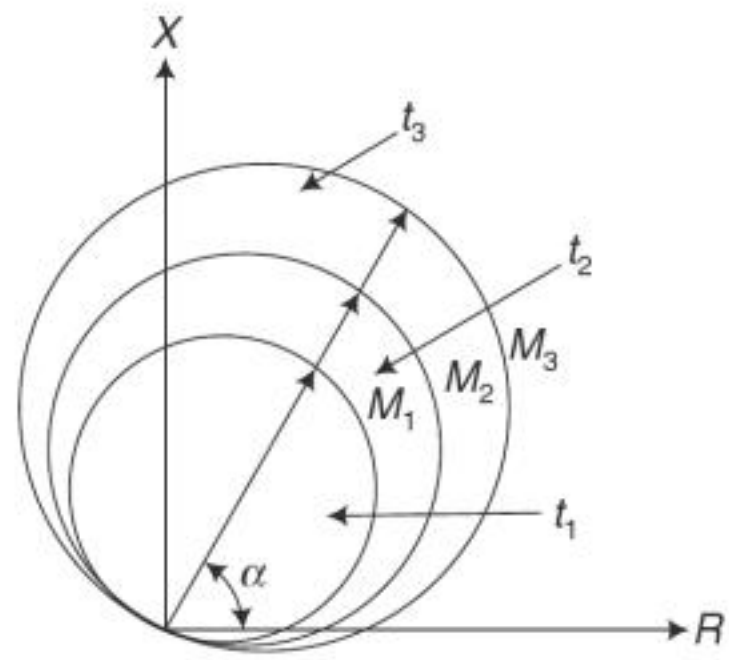

Fig. 6.20 *Characteristics of MHO relay*

6.4.1 Electromechanical MHO Relay

An induction cup structure, as shown in Fig. 6.21 is used to realise a MHO characteristic. The torque equation is given by

$$T = K_1 VI \cos(\phi - \alpha) - K_2 V^2 - K_3$$

The upper and lower poles are energised by a voltage V to produce a polarising flux. The series capacitor provides memory action which will be explained later on. The left pole is energised by a current which is the operating quantity. The flux produced by I interacts with the polarising flux to give an operating

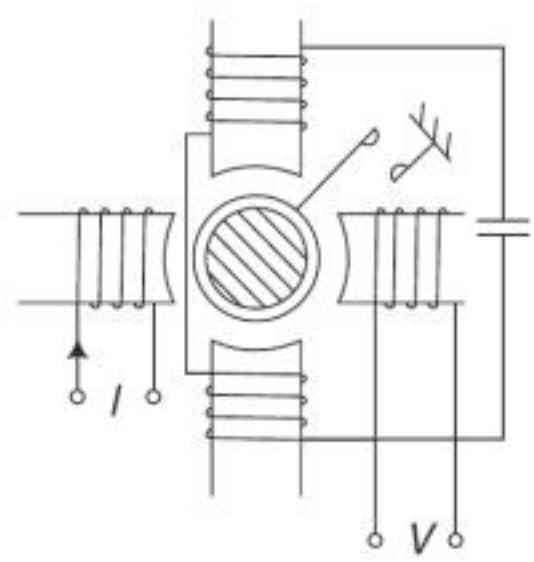

Fig. 6.21 *Induction cup type MHO relay*

You have either reached a page that is unavailable for viewing or reached your viewing limit for this book.

You have either reached a page that is unavailable for viewing or reached your viewing limit for this book.

You have either reached a page that is unavailable for viewing or reached your viewing limit for this book.

(ii) The magnitude of the polarising quantity is of no importance. But in no case should it be zero. In case of terminal faults, when the restraint voltage is zero, the polarising input should not be zero.

The polarising voltage V_p can be related to the restraint voltage V_r by an angle θ, such that

$$\frac{V_p}{V_r} = C\angle\theta, \quad \text{where } C \text{ can have any value}$$

The polarising quantities are also used with directional relays. While discussing the directional relays, methods to derive a polarising voltage have been discussed.

6.4.5 Polarised MHO Relay

In a polarised MHO relay, the inputs to the phase comparator are $(IZ_r - V)$ and V_p, where

V = voltage at the relay point. During a fault, it becomes the fault voltage.

I = Current at the relay point. During a fault, it is the fault current.

Z_r = MHO relay setting

V_p = polarising voltage.

IZ_r is the operating quantity and V is the restraint voltage. V_p is the polarising input which exists even if V is zero as in the case of terminal faults. Therefore, a polarised MHO relay operates when terminal faults occur, as the phase comparison is made between $(IZ_r - V)$ and V_p, though $V = 0$ or is negligibly small. For a self-polarised MHO relay in which memory has not been used, the input quantities are $(IZ_r - V)$ and V. For such a simple MHO relay, when V becomes zero, phase comparison is not possible and the relay fails to operate.

If V_p and V, applied to the measuring unit are in phase, the diameter of the MHO circle will be equal to Z_r. If the polarising and restraint currents are displaced by an angle β, the characteristic will remain a circle but Z_r becomes a chord of the circle, as shown in Fig. 6.28.

In case of an amplitude comparator, if the polarising voltage is to be used, the inputs are $(V_p/Z_p - I + V/Z_r)$ and $(V_p/Z_p - I - V/Z_r)$.

The following methods are used in practice to obtain a polarising voltage for a polarised MHO relay.

(i) V_p can be derived from the fault voltage through a resonant circuit tuned to the system frequency (i.e. faulty phase voltage with memory).

(ii) It may be derived from the healthy phases through a suitable phase-shifting circuit.

(iii) It may be a combination of the faulty phase voltage and the healthy phase voltage.

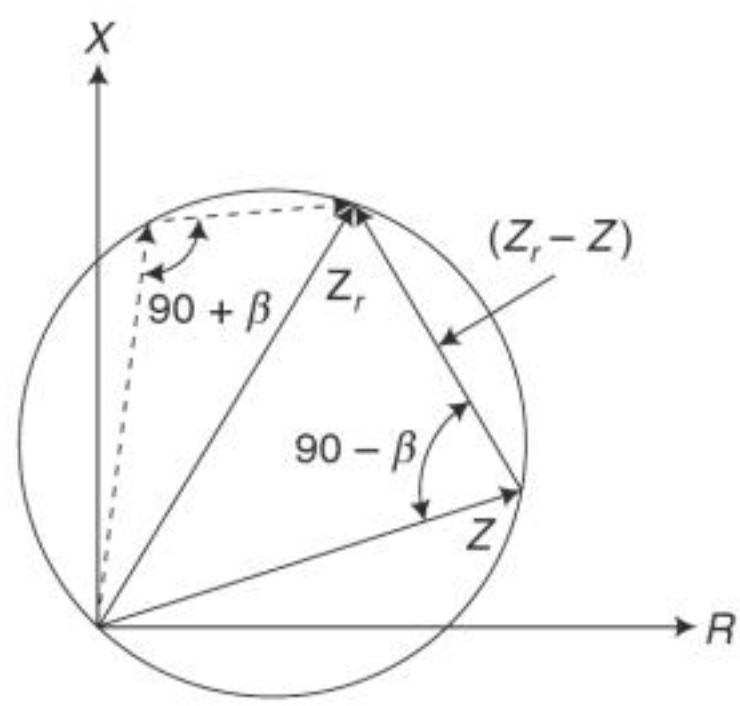

Fig. 6.28 *General case of polarised MHO relay*

You have either reached a page that is unavailable for viewing or reached your viewing limit for this book.

You have either reached a page that is unavailable for viewing or reached your viewing limit for this book.

You have either reached a page that is unavailable for viewing or reached your viewing limit for this book.

6.6 INPUT QUANTITIES FOR VARIOUS TYPES OF DISTANCE RELAYS

Static relays employ either voltage comparator or current comparator. Table 6.1 shows voltage inputs for different types of distance relays. Table 6.2 shows current inputs to realise various distance relay characteristics. The directional relay is not a distance relay. It has been included in these tables as it is used in conjunction with impedance relays. Its characteristic is a straight line passing through the origin.

Table 6.1 Voltage inputs for different types of distance relays

Types of Relays	*Amplitude Comparator*		*Phase Comparator (90°)*	
	Operating quantity	*Restraining quantity*	*Operation quantity*	*Polarising quantity*
Impedance	IZ_r	V	$IZ_r - V$	$IZ_r + V$
Directional	$IZ_r + V$	$V - IZ_r$	IZ_r	V
Reactance	$2IX_r - V$	V	$(IZ_r - V)$ or $(IX_r - V)$	IX_r
MHO	IZ_r	$2V - IZ_r$	$IZ_r - V$	V
Offset MHO	$I(Z_r - Z_0)$	$2V - I(Z_r + Z_0)$	$IZ_r - V$	$V - IZ_0$
Angle Impedance	$2IZ_r - V$	V	$IZ_r - V$	IZ_r

Table 6.2 Current inputs for different types of distance relays

Types of Relays	*Amplitude Comparator*		*Phase Comparator (90°)*	
	Operating quantity	*Restraining quantity*	*Operating quantity*	*Polorising quantity*
Impedance	I	$\frac{V}{Z_r}$	$I - \frac{V}{Z_r}$	$I + \frac{V}{Z_r}$
Directional	$I + \frac{V}{Z_r}$	$\frac{V}{Z_r} - I$	I	$\frac{V}{Z_r}$
Reactance	$I - \frac{V}{2X_r}$	$\frac{V}{2X_r}$	I	$I - \frac{V}{X_r}$
MHO	I	$\frac{2V}{Z_r} - I$	$I - \frac{V}{Z_r}$	$\frac{V}{Z_r}$
Offset MHO	$2I - \left(\frac{V}{Z_r} + \frac{V}{Z_0}\right)$	$\frac{V}{Z_r} - \frac{V}{Z_0}$	$I - \frac{V}{Z_r}$	$\frac{V}{Z_o} - I$
Angle Impedance	$2I - \frac{V}{Z_r}$	$\frac{V}{Z_r}$	I	$I - \frac{V}{Z_r}$

Copyrighted material

You have either reached a page that is unavailable for viewing or reached your viewing limit for this book.

You have either reached a page that is unavailable for viewing or reached your viewing limit for this book.

You have either reached a page that is unavailable for viewing or reached your viewing limit for this book.

If the MHO circle is shifted towards the R-axis by making the characteristic angle of MHO circle α less than the characteristic angle of the line ϕ, the resulting characteristic will tolerate a greater value of arc resistance. Figure 6.35(c) shows such a characteristic. In this case, $(Z_F + R)$ may be even greater than Z_l, but it is less than the diameter of the circle. In such a case, the relay will operate so long as the point $(Z_F + R)$ remains within the characteristic circle. In this case, the relay setting is equal to the diameter of the MHO circle. The maximum length of the line which can be protected is given by $Z_l = OB \cos(\phi - \alpha)$ where OB is the diameter of the circle. The values of α which are used for different system voltages are as follows:

System voltage in kV	400	275	132	66	33	11
	75	75	60	60	45	45

The inclination of the relay characteristic towards R-axis for lower voltage lines is more and such characteristics have a greater tolerance for arc resistance. When line impedance angle is more than 60°, the inclination towards the R-axis is also reduced, otherwise the accuracy of the relay is affected. In other words, with lower values of α arc tolerance is greater but relay accuracy is reduced. Thus, with longer values of α, arc tolerance is less but relay accuracy is higher.

The arc resistance affects the performance of different types of distance relays to different extents. Figure 6.36 shows the characteristics of a MHO, reactance and impedance relays on the R-X diagram to protect the same line. If a fault occurs at the point F with arc resistance R_1, the MHO relay fails to operate but the impedance and reactance relays will operate. If the values of the arc resistance is R_2, the MHO and impedance relays fail to operate but the reactance relay will operate. This shows that the MHO relay is most affected, the impedance relay is moderately affected and the reactance relay is least affected by arc resistance. As the reactance relay measures only reactance it is not at all affected by arc resistance.

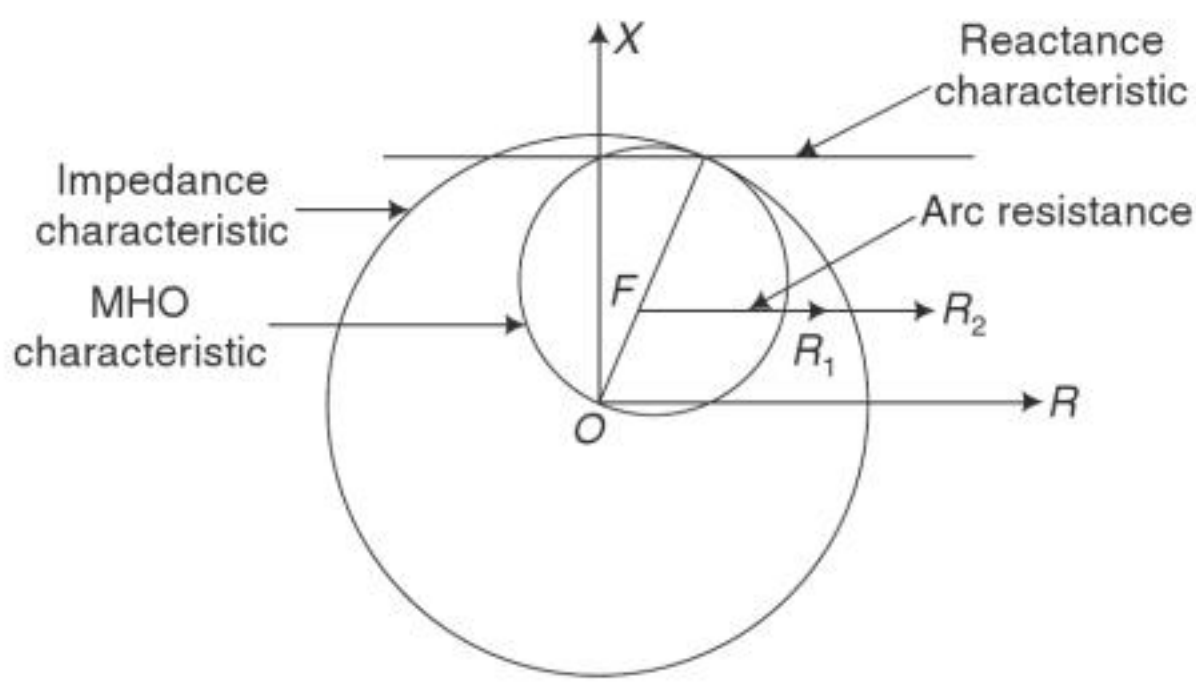

Fig. 6.36 *Effect of arc resistance on distance relays*

6.8.1 Fault Area on Impedance Diagram

Figure 6.37 shows the effect of fault resistance on the impedance diagram vectorially. If a fault occurs at B, without resistance, the relay located at A will measure the

You have either reached a page that is unavailable for viewing or reached your viewing limit for this book.

You have either reached a page that is unavailable for viewing or reached your viewing limit for this book.

You have either reached a page that is unavailable for viewing or reached your viewing limit for this book.

Since $$I_{dc} = 6.0 \text{ A},$$

$$I = \sqrt{I_{ac}^2 + I_{dc}^2} = \sqrt{(8.0)^2 + (6.0)^2} = 10.0 \text{ A}$$

Therefore,

$$Z_{\text{fictitious}} = \frac{110 \text{ V}}{10.0 \text{ A}} = 11.0 \text{ ohms}$$

Since the fictitious impedance due to the dc offset now equals the setting, the relay operates. Though, the fault point is beyond the steady-state reach of the relay, but the relay operates as the fictitious impedance due to the dc offset equals the setting of the relay. This is the case of overreach of the distance relay. The percentage overreach in this case is

$$\text{Percentage overreach} = \frac{13.75 - 11.00}{11.00} \times 100 = 25\%$$

Therefore, in order to minimise the transient overreach, the distance relay should have better design. Relay designers have not been able to reduce the overreach of the distance relay to less than 10% of its setting (i.e., steady-state reach). In practice, the percentage overreach is taken between 10% and 20%. Therefore, the distance relays cannot be set 100% of the line length to provide high-speed primary protection to the entire line. The high-speed distance relay of zone-1 is adjusted to 80% to 90% of the line length. The margin of 10% to 20% is left for transient overreach, error in calculation of line impedance and errors in transducers (CTs and VTs).

6.10 EFFECT OF POWER SURGES (POWER SWINGS) ON THE PERFORMANCE OF DISTANCE RELAYS

Consider a transmission line which connects two generating stations, as shown in Fig. 6.41. The current flowing through the transmission line depends upon the phase difference between the voltage generated at the two ends of the line. The phase difference is equal to the rotor angle. The phase angle between the generated voltages changes during disturbances which may arise because of the removal of a fault or a sudden change in the load. During disturbances, the rotor of the generator swings around the final steady state value. When the rotor swings, the rotor angle changes and the current flowing through the line also changes. Such currents are heavy and they are known as power surges. So long as the phase angle between the generated voltages goes on changing, the current 'seen' by the relay is also changing. Therefore, the impedance measured by the relay also varies during power swings. Thus, a power surge 'seen' by the relay appears like a fault which is changing its distance from the relay location. The characteristic of some important distance relays and power surge are shown on the *R-X* diagram, Fig. 6.40. It is evident from the figure that the relay characteristic occupying greater area on the *R-X* diagram remains under the influence of the power surges. The MHO relay having the least area on the *R-X* diagram is least affected. The impedance relay characteristic has more area than the MHO relay but lesser area than a reactance relay. Therefore, while it is more affected than the MHO relay, it is affected less than the reactance relay. In other words, it is moderately affected. The reactance relay occupying the largest area is most affected.

Copyrighted material

You have either reached a page that is unavailable for viewing or reached your viewing limit for this book.

You have either reached a page that is unavailable for viewing or reached your viewing limit for this book.

You have either reached a page that is unavailable for viewing or reached your viewing limit for this book.

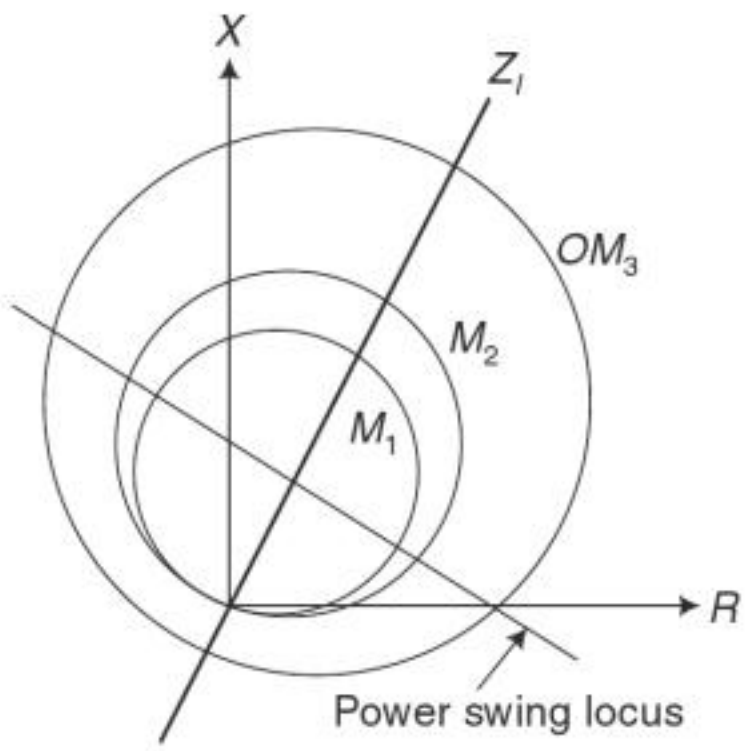

Fig. 6.45 *Offset III zone characteristic for power swing blocking*

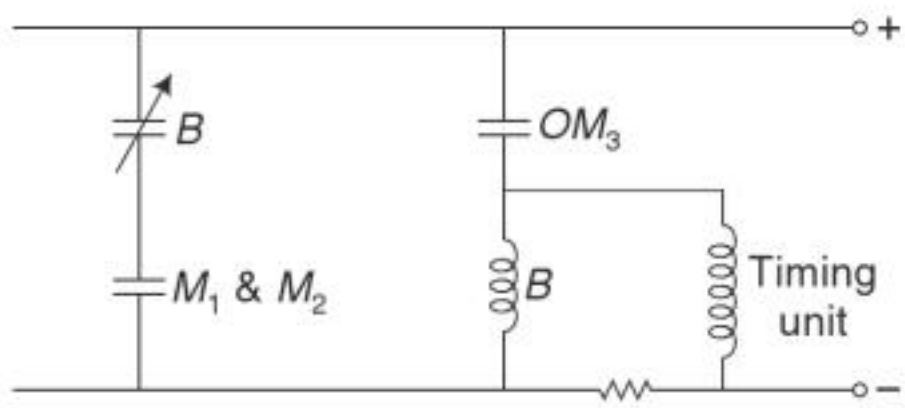

Fig. 6.46 *Connection of out of step blocking relay*

6.11 EFFECT OF LINE LENGTH AND SOURCE IMPEDANCE ON DISTANCE RELAYS

Figure 6.48(a) shows a one-line diagram of the system during fault condition. Z_s is the source impedance behind the relay. Z_L is the line impedance from the relaying point to the fault point F. The current flowing through the relay is given by

$$I = \frac{E}{Z_S + Z_L}$$

The voltage at the relay location which is applied to the distance relay is

$$V = IZ_L = \frac{EZ_L}{Z_S + Z_L} = \frac{E}{\frac{Z_S}{Z_L} + 1}$$

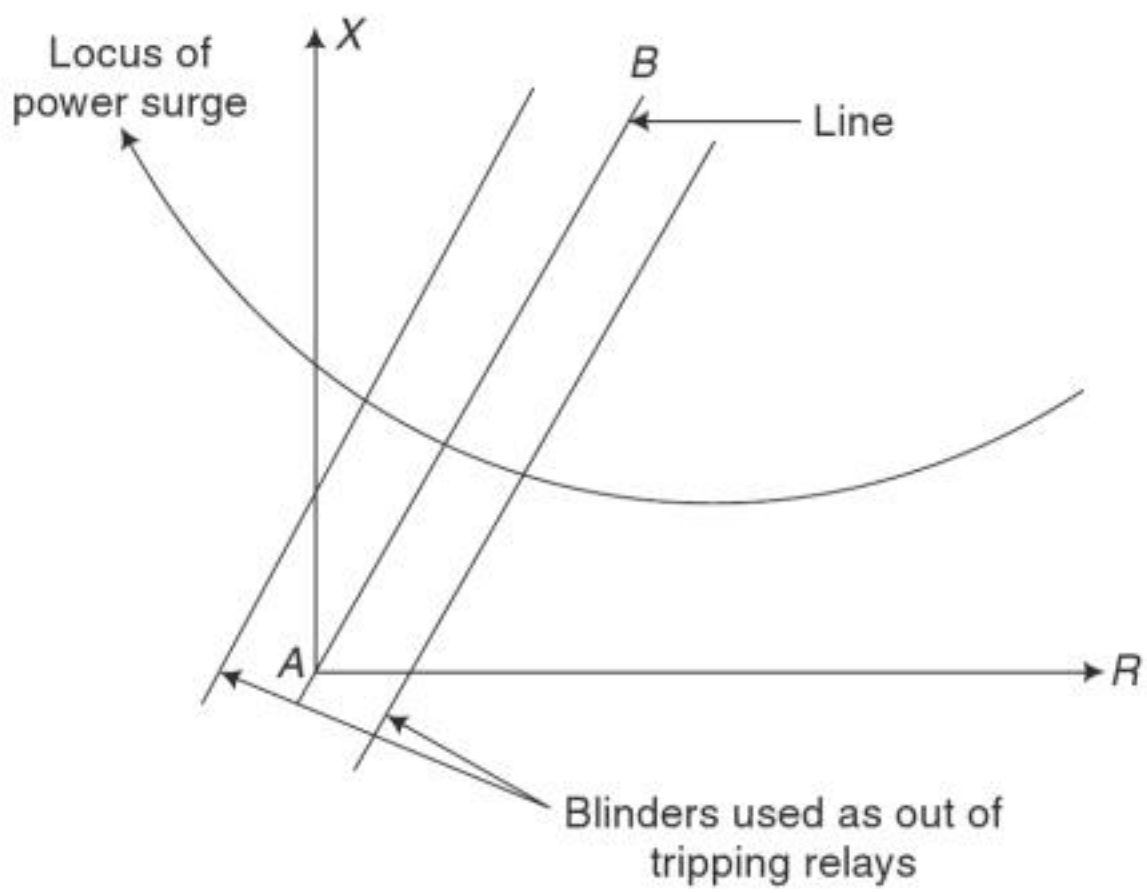

Fig. 6.47 *Out of step tripping relays*

Copyrighted material

You have either reached a page that is unavailable for viewing or reached your viewing limit for this book.

You have either reached a page that is unavailable for viewing or reached your viewing limit for this book.

You have either reached a page that is unavailable for viewing or reached your viewing limit for this book.

The phase comparison between IX_r and V gives a straight line characteristic, as shown in Fig. 6.51(a). The characteristics resulting from the phase comparison of other inputs are shown in Fig. 6.51(b), (c), (d) and (e). The proof for the characteristics shown in Fig. 6.51(d) and (e) has already been given in section 6.3.3 and 6.4.3, respectively. The proofs for the other characteristics are given at the end of this chapter in the appendix. The resultant characteristic is shown in Fig. 6.51(f). The MHO circle will not interfere with the rectangular characteristic as the diameter of the circle passes through the corners of the rectangle.

The desired characteristic is shown in Fig. 6.51(g). In this case, the MHO circle is an undesired element, which can be eliminated if at least one of the quantities $(IZ_r - V)$ and V is pulsed. To take care of the resistance fault near the bus, a characteristic shown in Fig. 6.51(h) is obtained giving a 10° shift in the characteristic. This is obtained by shifting IX_r and IR_r by 10°. For this, X_r is replaced by an impedance having a phase angle of 80°. A capacitor is placed in parallel with R_r for 10° shift in IR_r.

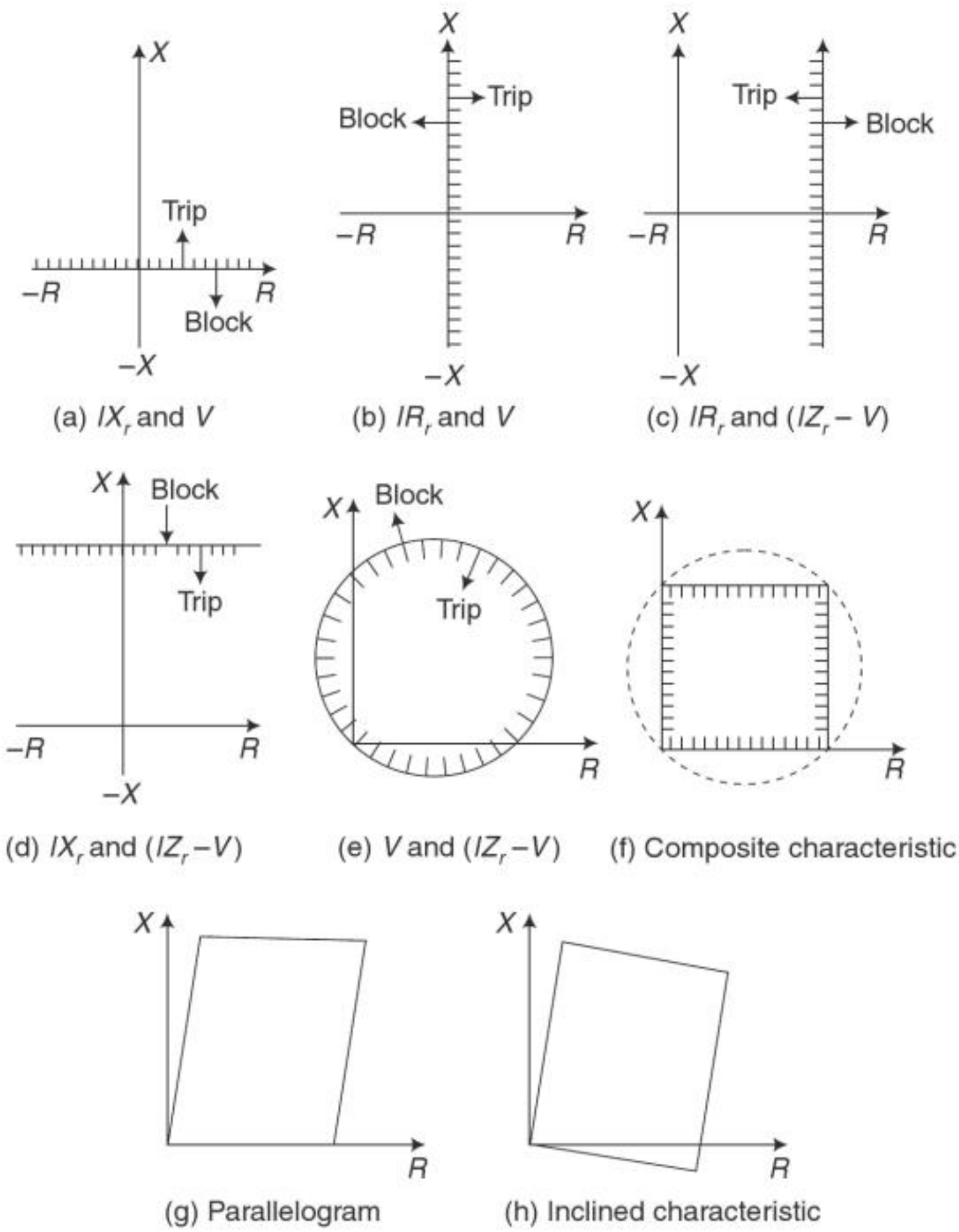

Fig. 6.51 *Various characteristics resulting from the phase comparison of inputs indicated in Fig. 6.50*

You have either reached a page that is unavailable for viewing or reached your viewing limit for this book.

You have either reached a page that is unavailable for viewing or reached your viewing limit for this book.

You have either reached a page that is unavailable for viewing or reached your viewing limit for this book.

You have either reached a page that is unavailable for viewing or reached your viewing limit for this book.

You have either reached a page that is unavailable for viewing or reached your viewing limit for this book.

You have either reached a page that is unavailable for viewing or reached your viewing limit for this book.

You have either reached a page that is unavailable for viewing or reached your viewing limit for this book.

You have either reached a page that is unavailable for viewing or reached your viewing limit for this book.

You have either reached a page that is unavailable for viewing or reached your viewing limit for this book.

You have either reached a page that is unavailable for viewing or reached your viewing limit for this book.

You have either reached a page that is unavailable for viewing or reached your viewing limit for this book.

You have either reached a page that is unavailable for viewing or reached your viewing limit for this book.

You have either reached a page that is unavailable for viewing or reached your viewing limit for this book.

There are different types of distance protection schemes which reduce the number of measuring relays (i.e. distance relays in the schemes under discussion) to reduce the cost of protection. The number of measuring units depends upon the technical requirements but in selecting a particular scheme the economic consideration also must be taken into account. Some important schemes have been described below.

6.24.1 Scheme Using Six Measuring Units

In this scheme, one measuring unit is used for all the III zones through a timer unit. Three units are used for phase to ground faults; one unit for each phase. Three units are used for phase to phase faults; one unit for each pair of phases.

6.24.2 Scheme Using Twelve Measuring Units

In this scheme, only one unit is employed for the I and II zone. A timing unit sets their reach. A separate unit is employed for the III zone. Separate relaying units are provided for phase to phase and phase to ground faults. Thus, 12 relaying units are employed in this scheme.

6.25 SWITCHED SCHEMES

A switched scheme may employ only one, two or three measuring units. Such schemes are less costly and hence they can be used for lines operating at comparatively lower voltages such as 66 kV, 33 kV or 11 kV.

In a switched scheme, an appropriate switching arrangement is necessary to switch on the corresponding voltage and current for the measuring units. The various types of switched schemes have been discussed below.

6.25.1 Delta-Wye Switching

In this scheme, 3 measuring units are employed. The same unit is used for phase as well as ground faults. Normally the units are connected for phase faults. They are enerised by delta voltage and delta current. When ground faults occur they are switched to *Y* connections. Thus, phase faults are cleared instantaneously but ground faults after a small delay. The tripping time is about one cycle for phase faults and about five cycles for ground faults.

The measuring units may be impedance, MHO or reactance units depending on the technical requirements of the system in a particular situation. Polyphase overcurrent or MHO type fault detectors can be used to start the timing unit on phase fault in the case of impedance or MHO type measuring units. For ground faults residual current or power relays are employed as fault detectors.

When the measuring units are reactance type distance relays, switching to *Y* connection is done only for single line to ground faults. For double line to ground faults switching to *Y* connection is prevented by a suitable arrangement in the switching system and the delta connection is retained in this situation. On double line to ground fault, the current in the leading of the two fault phases may be almost in phase with the corresponding *Y* voltage, and because of this fact, the relay may measure zero or negative reactance, which could cause an undesired tripping of the circuit breaker.

Copyrighted material

You have either reached a page that is unavailable for viewing or reached your viewing limit for this book.

You have either reached a page that is unavailable for viewing or reached your viewing limit for this book.

You have either reached a page that is unavailable for viewing or reached your viewing limit for this book.

The third reclosure is made after 60 to 120 s. Less than 2% of faults require the third reclosure. If a fault is not cleared after three reclosures, there is an automatic lock-out of the reclosing relay. The usual practice is to reclose the circuit breakers three-times. The fourth reclosure, if required, can be made by hand. If the fourth reclosure fails, there is clear indication of a permanent fault. The remaining faults are permanent faults which require detection and repair by the maintenance staff. A multi-shot scheme is often recommended in forest areas. If several trip and reclose operations are performed, the maintenance of circuit breaker increases. The vacuum circuit breakers are almost maintenance-free and hence are more suitable for multi-shot reclosing.

6.26.3 Single-phase (Single-pole) Auto-reclosing

If two systems are interconnected by a single tie line, the tripping of all three phases on a fault causes an immediate drift in phase angle of the voltages of the two systems. On the other hand, if only the faulty phase is tripped during earth fault conditions, the synchronising power still flows through the healthy phases. In a single-phase auto-reclosing (single-pole auto-reclosing) scheme, only the faulty phase pole of the circuit breaker is tripped and reclosed. For any multi-phase fault, all the three phases are simultaneously tripped and reclosed. In a single-phase auto-reclosing, each phase of the circuit breaker is segregated and provided with its own closing and tripping mechanism. The main disadvantage is a longer de-ionsiation time. When a faulty phase is disconnected, a capacitive coupling between the healthy phases and the faulty phase tends to maintain the arc, resulting in a longer de-ionisation time. This may cause interference with communication circuits.

A complex relaying scheme is required to detect and select the faulty phase in case of single phase auto-reclosing scheme. Therefore, this scheme is more complex and expensive as compared to the three-phase auto-reclosing scheme.

6.26.4 Three-phase Auto-reclosing

In a three-phase auto-reclosing scheme, all the three phases are tripped and reclosed when a fault occurs on the system, irrespective of types of the fault. Its relaying scheme is simpler and less expensive than the single phase auto-reclosing scheme. It is faster because of less de-ionising time.

6.26.5 Delayed Auto-reclosing Scheme

When two sections of a power system are connected through a number of transmission systems, there is little chance of drifting them apart in phase and losing synchronism. On such a system, delayed auto-reclosing can be employed. The C.E.G.B. employs delayed auto-reclosing with dead times of the order of 5-6 s. The fault arc de-ionisation times and circuit breaker operating characteristics do not present problems in such a scheme. Before reclosing, power swings are allowed to settle down. All tripping and reclosing schemes may be three-phase only, simplifying the control circuits compared to single-phase schemes. An analysis of their relative performance on the C.E.G.B. EHV system shows that high-speed auto-reclosings are successful in 68% of reclosure attempts, whereas delayed reclosings in 77.5%.

Copyrighted material

You have either reached a page that is unavailable for viewing or reached your viewing limit for this book.

You have either reached a page that is unavailable for viewing or reached your viewing limit for this book.

You have either reached a page that is unavailable for viewing or reached your viewing limit for this book.

18. Discuss the effect of power surges on the performance of different types of distance relays.
19. Discuss the selection of distance relays for the protection of long, medium and short lines against (i) ground faults and (ii) phase faults.
20. Explain why a MHO characteristic is preferred for the protection of long lines against phase faults, whereas a reactance relay is preferred for ground faults.
21. Explain why a reactance relay is preferred for the protection of short lines against both, phase faults as well as ground faults.
22. What are blinders? In what circumstances are they used in conjunction with a MHO relay?
23. What do you understand by out of step tripping? Discuss the operating principle of an out of step tripping relay.
24. What do you understand by out of step blocking? Discuss the operating principle of an out of step blocking relay.
25. Derive an expression for the minimum voltage at which the relay can operate. What is the minimum voltage for the operation of a relay, if $Z_S/Z_L = 13$?
26. Discuss how an elliptical characteristic is realised using static comparators. Why is an elliptical characteristic used only for back-up protection?
27. What are restricted MHO characteristic? How are such characteristics realised using a phase comparator?
28. Discuss what is swivelling characteristic. How is it realised using a phase comparator? What are its advantages?
29. What is quadrilateral characteristic? In what way is it superior to other characteristics? How is it realised using a phase comparator?
30. Show that a relay used for phase to phase faults and three-phase faults does not measure the same impedance for both types of faults if they are energized by line voltage and line currents. Discuss what measures are taken so that the relay can measure the same impedance for both types of faults.
31. What are switched distance relaying schemes? Describe them in brief.
32. What is delta-wye switching scheme for distance protection?
33. What is interphase switching scheme for distance protection?
34. Discuss a switched scheme which uses only one measuring unit for all types of phase as well as ground faults.
35. What are the advantages of auto-reclosing?

    What are (i) Single-shot auto-reclosing, (ii) Multi-shot auto-reclosing, (iii) Single-phase auto-reclosing, (iv) Three-phase auto-reclosing and (v) Delayed auto-reclosing?
36. Figure 6.79 shows distance protection for a section of a power system. The I zone setting at *A* and *B* is 150 ohms.

    (a) What will be impedance seen by the relay at *A* for a fault at F_1?

    Will the relay at *A* operate before the circuit breaker at *B* has tripped?

Copyrighted material

You have either reached a page that is unavailable for viewing or reached your viewing limit for this book.

You have either reached a page that is unavailable for viewing or reached your viewing limit for this book.

You have either reached a page that is unavailable for viewing or reached your viewing limit for this book.

reliable because of its simplicity. From cost considerations, the break-even point is about 15-30 km, but the distance is usually limited due to the attenuation of the signal caused by distributed capacitance and series resistance, rather than the cost. For short important lines, wire-pilot relaying is recommended. For unimportant lines, slow-speed overcurrent relays are employed. For long lines, carrier-current schemes are cheaper and more reliable than wire-pilot schemes.

The two alternative operating principles which are used for most of the practical schemes are circulating current principle and balanced voltage principle. Most wire pilot schemes use amplitude comparison in circulating current scheme since they are easier to apply to multi-ended lines and are less affected by pilot capacitance.

7.2.1 Circulating Current Scheme

Figure 7.1 shows the schematic arrangement for the circulating current principle. Figure 7.2 shows the schematic diagram of a practical scheme employing circulating current principle. The scheme is suitable for pilot loop resistance up to 1000 Ω and inter-core capacitances up to 2.5 microfarad. Polarities of the secondary voltage of CT have been marked in Fig. 7.1 for normal or external fault condition. Currents flowing in pilot wires and relay coils caused by CT secondary voltages are also

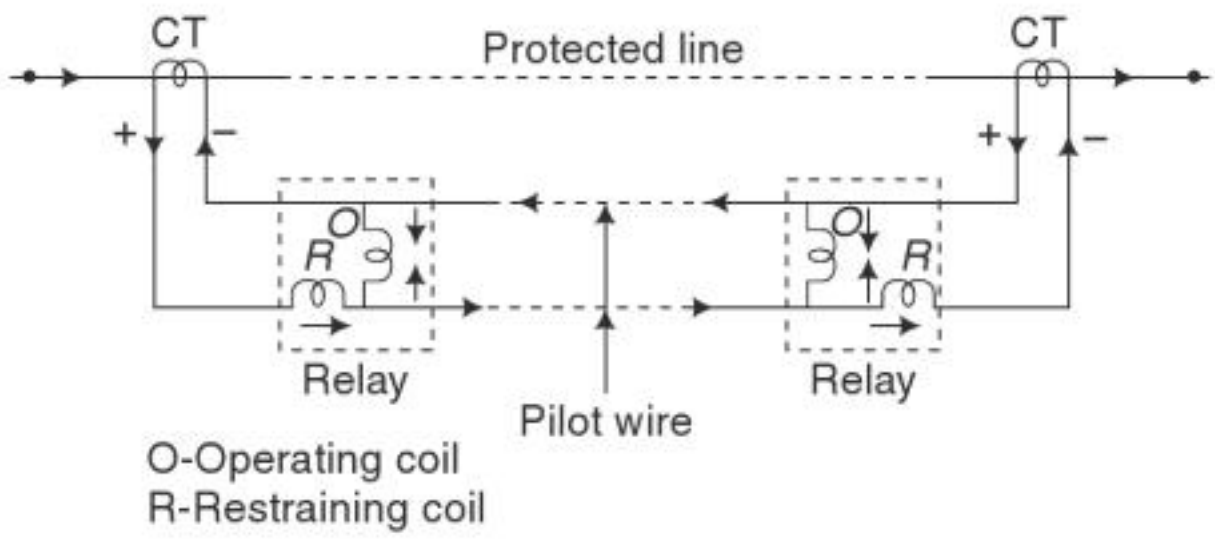

Fig. 7.1 *Schematic diagram of circulating current principle*

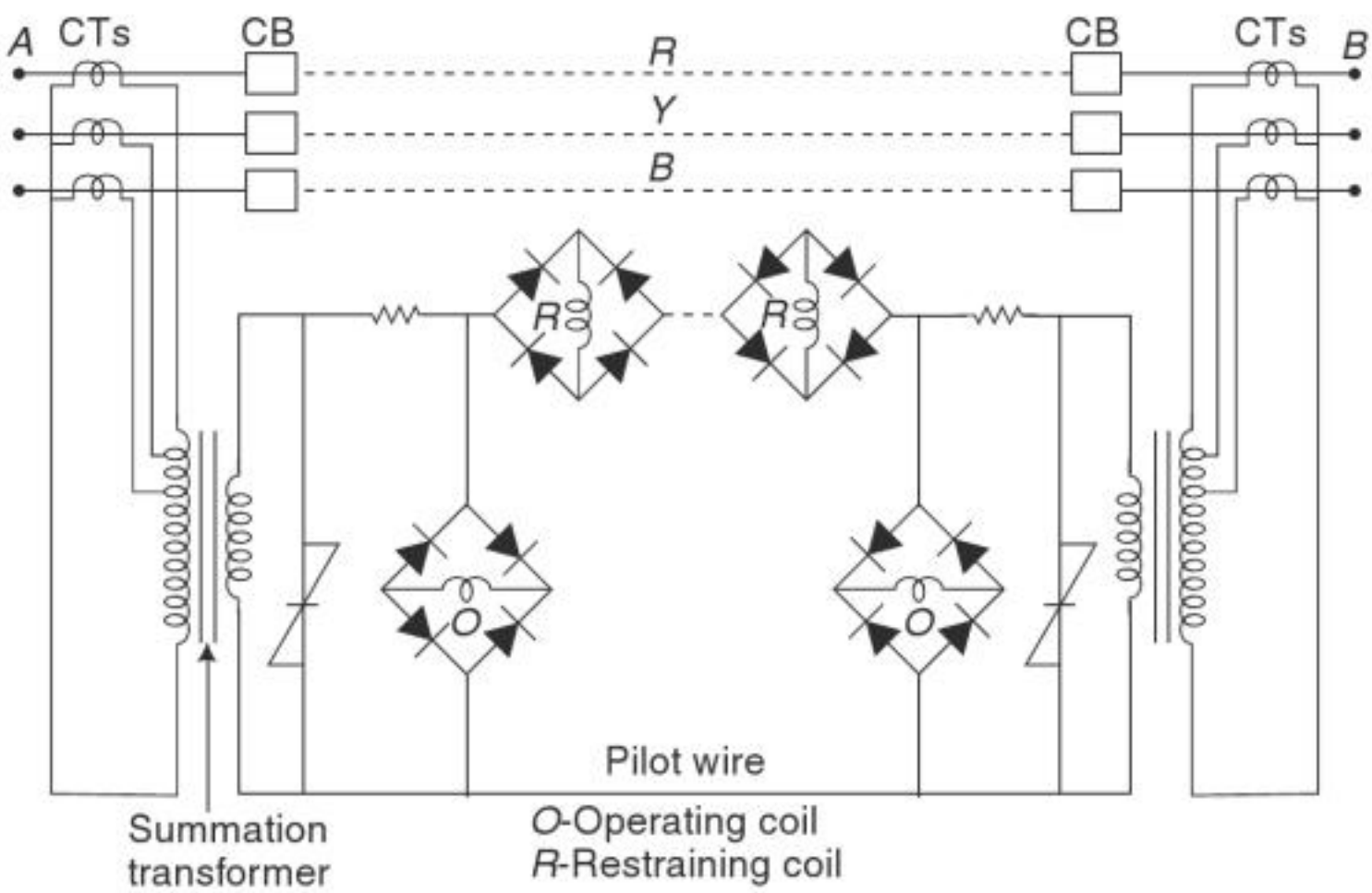

Fig. 7.2 *Practical scheme based on circulating current principle*

You have either reached a page that is unavailable for viewing or reached your viewing limit for this book.

You have either reached a page that is unavailable for viewing or reached your viewing limit for this book.

You have either reached a page that is unavailable for viewing or reached your viewing limit for this book.

In case of internal fault, the voltage applied to both relays is positive during the positive half cycle as shown in Fig. 7.6(d). Both relays operate in this condition. During the negative half cycle, the voltage applied at both ends of the pilot is negative, as shown in Fig. 7.6(e). An additional half-wave rectifier is placed across each relay coil to perpetuate current during the dead half cycle. Non-linear resistors are used to protect the CTs from overvoltages during dead half cycle when the two CTs would otherwise be open circuited.

7.3 CARRIER CURRENT PROTECTION

This is the most widely used scheme for the protection of EHV and UHV power lines. In this scheme a carrier channel at high frequency is employed. The carrier signal is directly coupled to the same high voltage line that is to be protected. The frequency range of the carrier signal is 50 kHz to 700 kHz. Below this range, the size and the cost of coupling equipment becomes high whereas above this range, signal attenuation and transmission loss is considerable. The power level is about 10-20 W. In this scheme, the conductor of the power line to be protected are used for the transmission of carrier signals. So the pilot is termed as a power line carrier.

With the rapid development of power systems and the large amount of interconnection involved, it has become very essential to have high speed protective schemes. Carrier current schemes are quite suitable for EHV and UHV power lines. They are faster and superior to distance schemes. Distance protective schemes are non-unit type schemes. They are fast, simple and economical and provide both primary and back-up protection. The main disadvantage of conventional time-stepped distance protection is that the circuit breakers at both ends of the line do not trip simultaneously when a fault occurs at one of the end zones of the protected line section. This may cause instability in the system. Where high voltage auto-reclosing is employed, non-simultaneous opening of the circuit breakers at both ends of the faulted section does not provide sufficient time for the de-ionisation of gases. The carrier current protection or any other unit protection does not suffer from these disadvantages. In unit protection, circuit breakers trip simultaneously at both ends. It is capable of providing high speed protection for the whole length of the protected line section.

In a carrier current scheme, the carrier signal can be used either to prevent or initiate the tripping of a protective relay. When the carrier signal is used to prevent the operation of the relay, the scheme is known as carrier-blocking scheme. When the carrier signal is employed to initiate tripping, the scheme is called a carrier intertripping or transfer tripping or permissive tripping scheme.

Carrier current schemes are cheaper and more reliable for long lines compared to wire pilot schemes, even though the terminal equipment is more expensive and more complicated. In some cases, the carrier signal may be jointly utilised for telephone communication, supervisory control, telemetering as well as relaying. Thus, the cost of carrier equipment chargeable to relaying work can be reduced. The coupling capacitors required for carrier signal can be used also as potential dividers to supply reduced voltage to instruments, relays etc. This eliminates the use of separate potential transformers.

Copyrighted material

You have either reached a page that is unavailable for viewing or reached your viewing limit for this book.

You have either reached a page that is unavailable for viewing or reached your viewing limit for this book.

You have either reached a page that is unavailable for viewing or reached your viewing limit for this book.

Carrier Transfer or Carrier Intertripping Scheme

The following are important types of transfer tripping schemes.

(a) Direct transfer tripping (Under-reaching scheme)

(b) Premissive under-reach transfer tripping scheme

(c) Premissive over-reach transfer tripping scheme

(a) Direct transfer tripping (under-reaching scheme) In this scheme, three-stepped distance relays are placed at each of the protected line. Consider the protective scheme for line AB. The time-distance characteristics of the relays placed at A and B are shown in Fig. 7.9. When a fault occurs at F_3, the I zone high-speed relay operates at B and trips the circuit breaker. But the circuit breaker at A does not trip instantaneously. Therefore, for instantaneous tripping of the circuit breaker at A, a carrier signal is transmitted from B to A. A receive relay RR is included in the trip circuit as shown in Fig. 7.10(a). Thus, the circuit breaker at A also trips instantaneously for any fault at F_3, i.e. an end-zone fault. The disadvantage of this scheme however is that there may be undesirable tripping due to mal-operation or accidental operation of the signalling channel. The operation of the I zone relay at end B initiates tripping at that end as well as a carrier transmission. The scheme in which the I zone relay is used to send carrier signal to the remote end of the protected line section is called "transfer trip under-reaching scheme".

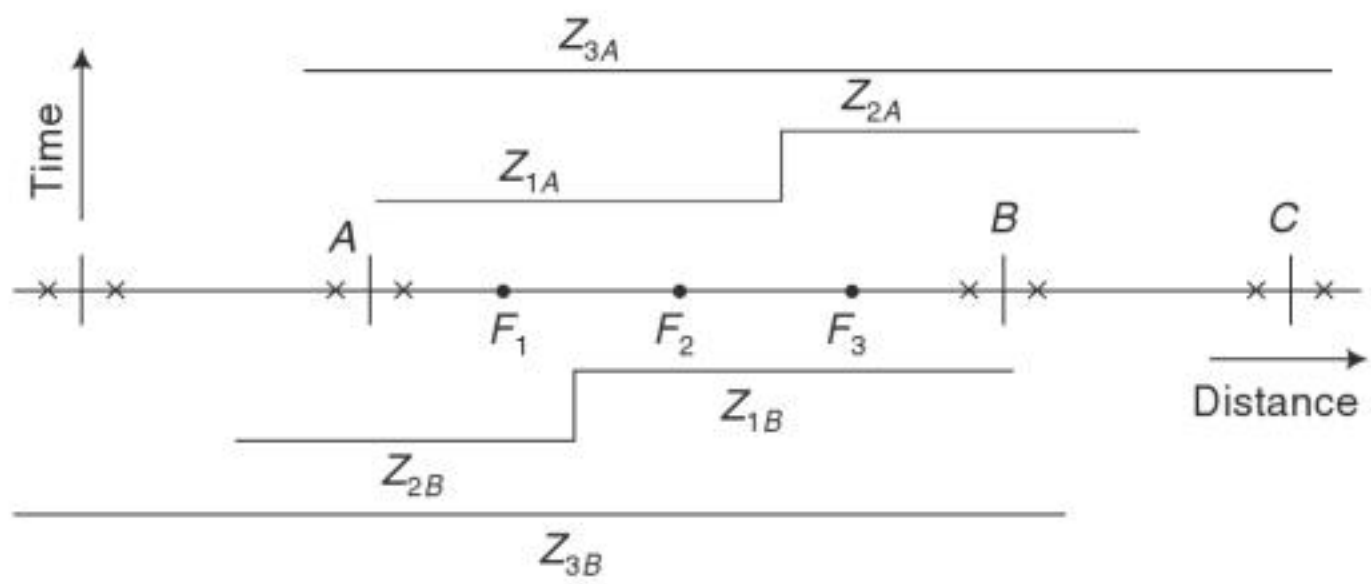

Fig. 7.9 *Stepped time-distance characteristics of relays for direct transfer tripping (under-reach scheme)*

If the fault occurs at F_1, the zone 1 relay operates and trips the circuit breaker at end A. It also sends a carrier signal to B. The receipt of the carrier signal at end B initiates tripping of the circuit breaker immediately. When a fault occurs at F_2, circuit breakers at both ends trip simultaneously. Distance relays provide back-up protection for adjacent lines which is obvious from Fig. 7.10(a) as the contacts T_2 and T_3 operate after a certain time delay. Figure 7.10(b) shows a signal sending arrangement. Figure 7.10(c) shows a solid state logic for the trip circuit.

In this scheme, the carrier signal is transmitted over the faulty line. Therefore, there is an additional attenuation of the carrier signal.

(b) Permissive under-reach transfer tripping scheme To overcome the possibility of undesired tripping by accidental operation or mal-operation of the signaling channel, the receive relay is supervised by the zone 2 relay. The zone 2 relay contact is placed in series with the receive relay RR as shown in Fig. 7.11(a). For an internal end-zone fault, contact Z_2 is closed. RR is also closed after receipt of the carrier signal from the other end and it trips the circuit. When there is no fault in the end

You have either reached a page that is unavailable for viewing or reached your viewing limit for this book.

You have either reached a page that is unavailable for viewing or reached your viewing limit for this book.

You have either reached a page that is unavailable for viewing or reached your viewing limit for this book.

Carrier Blocking Scheme

In this scheme, the carrier signal is used to block the operation of the relay in case of external faults. When a fault occurs on the protected line section, there is no transmission of the carrier signal. The blocking schemes are particularly suited to the protection of multi-ended lines.

In this scheme the zone 3 unit looks in the reverse direction and it sends a blocking signal to prevent the operation of zone 2 unit at the other end for an external fault. When a fault occurs at F_1 (see Fig. 7.14), it is seen by zone 1 relays at both ends A and B. Consequently, the fault is cleared instantaneously at both ends of the protected line. The carrier signal is not transmitted by the reverse looking zone 3 unit because it does not see the fault at F_1.

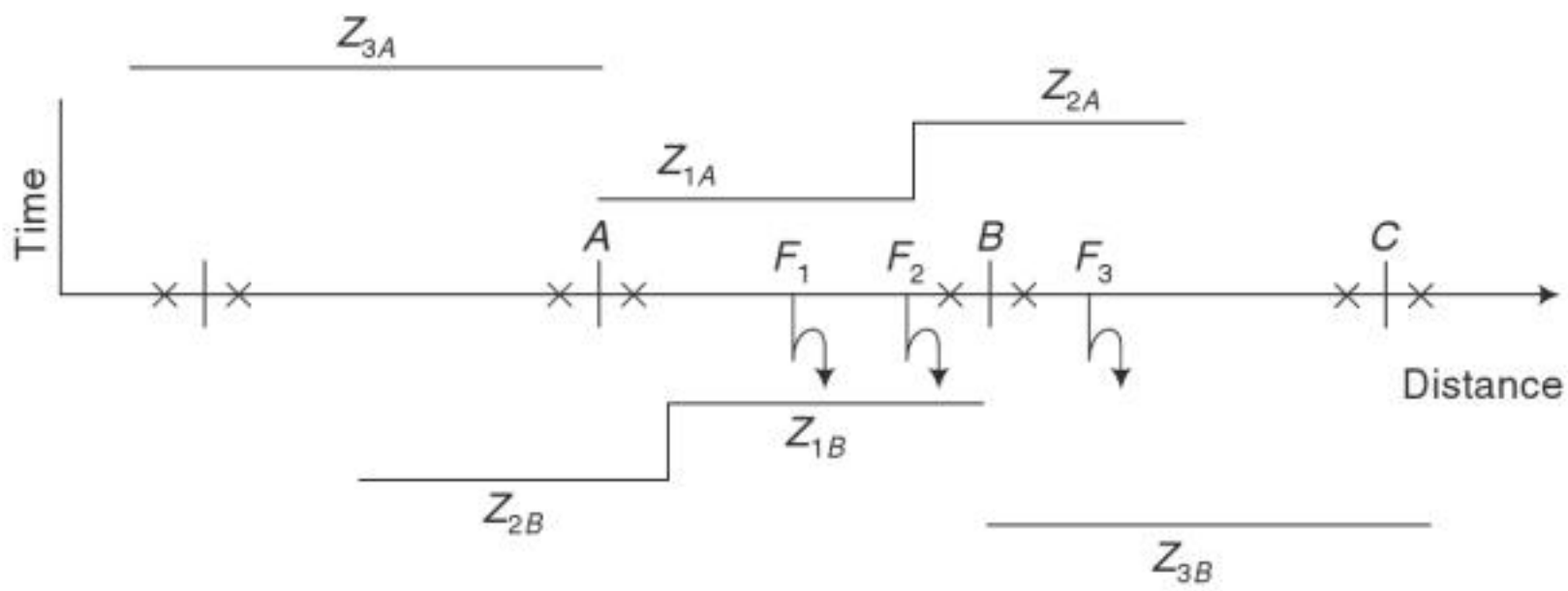

Fig. 7.14 *Stepped time-distance characteristics of relays for carrier blocking scheme*

When a fault occurs on F_2, which is an end-zone fault, it is seen by zone 2 units at both ends A and B and also by zone 1 unit at B. The fault is cleared by zone 1 unit at B and instantaneously by the zone 2 unit at A. The zone 2 unit has two operating times,

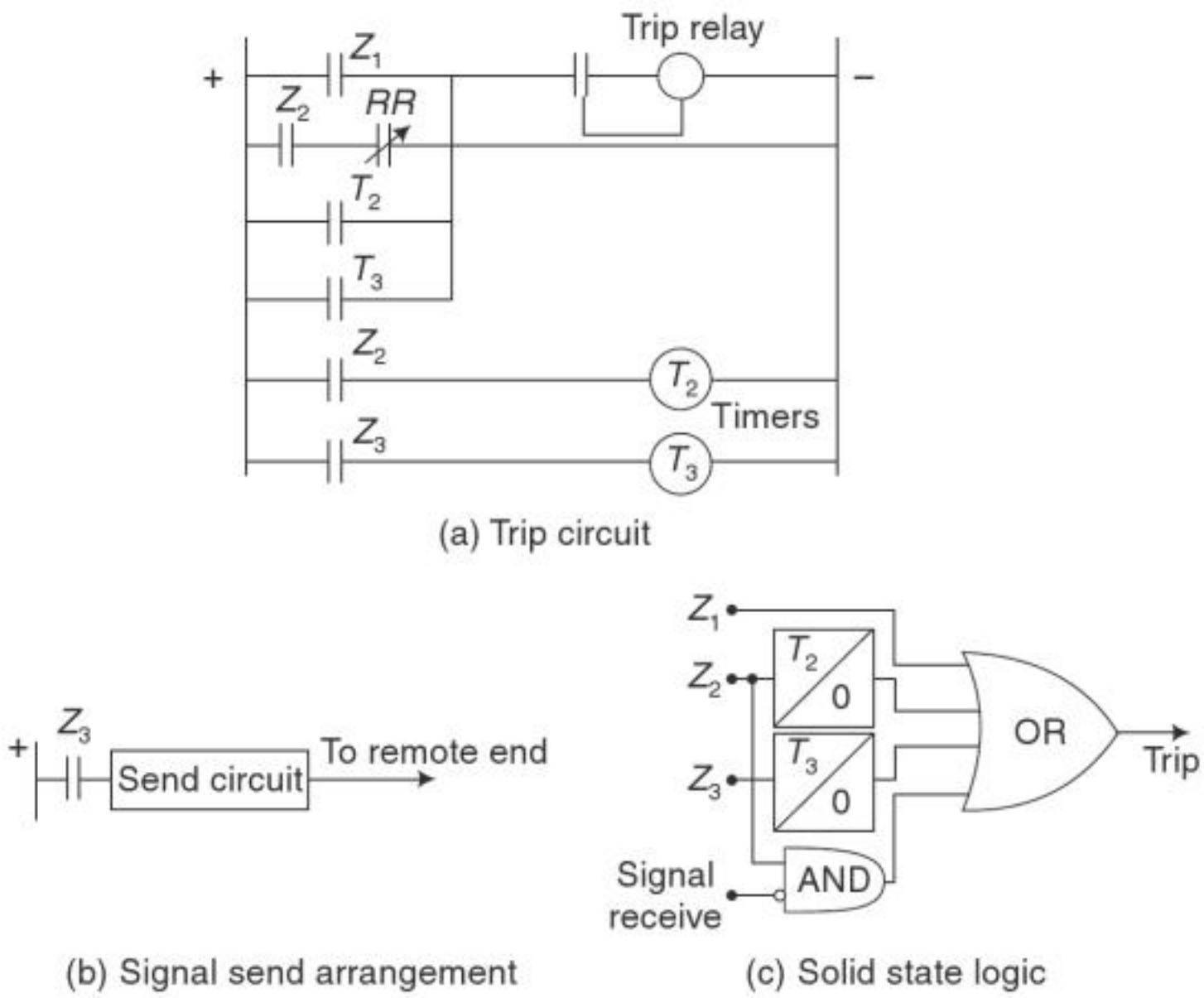

Fig. 7.15 *Carrier blocking scheme*

Copyrighted material

You have either reached a page that is unavailable for viewing or reached your viewing limit for this book.

You have either reached a page that is unavailable for viewing or reached your viewing limit for this book.

You have either reached a page that is unavailable for viewing or reached your viewing limit for this book.

8 Differential Protection

8.1 INTRODUCTION

Differential protection is a method of protection in which an internal fault is identified by comparing the electrical conditions at the terminals of the electrical equipment to be protected. It is based on the fact that any internal fault in an electrical equipment would cause the current entering it, to be different from that leaving it. Differential protection is one of the most sensitive and effective methods of protection of electrical equipment against internal faults. This principle of protection is capable of detecting very small magnitudes of the differential currents. The only drawback of the differential protection principle is that it requires currents from the extremities of a zone of protection, which restricts its application to the protection of electrical equipment, such as generators, transformers, motors of large size, bus zones, reactors, capacitors, etc. The differential protection is called unit protection because it is confined to protection of a particular unit (equipment) of a power plant or substation.

The main component of a differential protection scheme is the differential relay which operates when the phasor difference of two or more similar electrical quantities exceeds a predetermined value. Most differential relays are of current differential type. CTs are placed on both sides of each winding of a machine. The outputs of their secondaries are applied to the relay coils. Careful attention must be paid to the polarity marks (dot markings) on these CTs while connecting them. The relay compares the current entering a machine winding and leaving the same. Under normal conditions or during any external (through) fault, the current entering the winding is equal to the current leaving the winding. But in the case of an internal fault on the winding, these are not equal. This difference in the current actuates the relay. Thus, the relay operates for internal faults and remains inoperative under normal conditions or during external (through) faults. In case of bus-zone protections, CTs are placed on both sides of the busbar.

Differential protection is universally applicable to all elements of the power system, such as generators, transformers, motor of large size, bus zones, reactors, capacitors, etc. A pair of identical current transformers (CTs) are fitted on both end of the protected element (equipment). The CTs are of such a ratio that their secondary currents are equal during the normal conditions or external (through) faults. The secondary of the CTs are interconnected by a pilot-wire circuit incorporating an instantaneous overcurrent relay. While connecting CTs careful attention must be paid

Copyrighted material

to the dot (polarity) marks placed on the CTs. In order to trace the direction of the currents, following rule can be applied:

"When current enters the dot mark on the primary side of a CT, the current must leave the similar dot mark on the secondary side". The polarity connections of the CTs are such that their secondary currents are in the same direction in pilot wires, during normal conditions or external (through) faults. The operating coil of the overcurrent relay is connected across the CT secondary at the middle of pilot wires.

All differential protection schemes generate a well defined protected zone which is accurately delimited by the locations of CTs on both the ends of the protected element.

Overcurrent and distance protection systems discussed in Chapters 5 and 6 respectively are non-unit systems of protection which discriminate by virtue of time-grading. They are comparatively simple and cheap and require no pilot-wire circuits, but their fault clearance times are too slow for circuits operating at 33 kV and above, and for expensive equipment such as large generators, transformers and motors. Differential protection systems require pilot-wire circuits for interconnecting secondaries of CTs incorporating overcurrent relays. These protective systems can inherently discriminate without the use of time-grading and are fast in fault clearance. Differential protection systems are unit protection systems which are instantaneous and their time setting are independent of other protective systems.

As described earlier, the differential principle compares the secondary currents of the CTs in all the circuits into and out of the protected zone or area. It is easier to apply differential principle for the protection of generators, transformers, buses, motors and so on, because the terminals of each of these devices are at one geographical location where secondaries of the CTs and relays can be directly interconnected through pilot wires. For EHV/UHV transmission lines, where the terminals and CTs are widely separated by considerable distances (often by many kilometres), it is not practically possible to use differential relays as described above. Still, the differential principle provides the best protection and is still widely used for EHV/UHV transmission lines. A communication channel known as pilot such as wire pilot, carrier-current pilot, microwave pilot, or fiber optic cable is used for comparison of information between the various terminals. These systems are described in Chapter 7.

8.2 DIFFERENTIAL RELAYS

A differential relay is a suitably connected overcurrent relay which operates when the phasor difference of currents at the two ends of a protected element exceeds a predetermined value. Most of the differential relays are of current differential type.

The following are the various types of differential relays.

(i) Simple (basic) differential relay

(ii) Percentage (biased) differential relay

(iii) Balanced (opposed) voltage differential relay,

Depending on the type of differential relay employed as the main constituent in differential protection, the following are the various types of differential protection.

Copyrighted material

You have either reached a page that is unavailable for viewing or reached your viewing limit for this book.

You have either reached a page that is unavailable for viewing or reached your viewing limit for this book.

You have either reached a page that is unavailable for viewing or reached your viewing limit for this book.

Because of the problems discussed above, simple differential protection scheme suffers from the following disadvantages.

(i) The pilot wires through which CTs are connected are usually made up in the form of paper-insulated, lead-sheathed cable. The impedance of such pilot cables which depends on their lengths generally causes a slight difference between the CT secondary currents at the two ends of the protected section. If the relay is very sensitive, then very small differential current flowing through the relay may cause it to operate even if there is no fault existing.

(ii) There is possibility of maloperation of the relay due to currents circulating via paths other than the main pilot loop. The circuits for these unwanted currents is through the capacitance between the cores of the pilot cable. They are due to heavy through currents, caused by external (through) faults, which induce voltages in the pilot wires, this voltage, in turn, drives a current through the pilot capacitance. The effect increases with length of pilot cable and hence imposes a limit on the length of power circuit which can be protected.

(iii) Accurate matching of CTs cannot be achieved due to constructional errors and pilot cable impedances. If the CTs are not exactly matched, they may not have identical secondary currents, even though their primary currents are equal. Unequal secondary currents of CTs leads to flowing of a differential (spill) current through the relay. This spill current is especially large for a heavy external (through) fault. If the spill current exceeds the current setting of the relay, its maloperation may occur.

(iv) During severe external (through) fault conditions, large primary currents flowing through CTs cause unequal currents in their secondaries due to inherent difference in CT characteristics and unequal dc offset components in the fault currents. A conventional CT will saturate at some value of primary current and under these conditions, a considerable proportion of the primary current is used up in exciting the core and as a result there may be large ratio error and/or phase angle error. If CTs have different saturation levels, their ratio and phase angle errors will be different. Because of difference in CT errors, CT secondary currents have difference in magnitude and/or in phase and as a result, a differential (spill) current flows through the relay as shown in Fig. 8.5. Since both ratio and phase angle errors of CTs aggravate as primary current increases, the differential current (I_d) increases as the through fault current increases, causing the relay to maloperate. Ideally, the secondary currents (I_{1s} and I_{2s}) of both the CTs during through faults and normal conditions would be equal in magnitude and in phase with each other, and thus the differential current (I_d) would be zero. However, in practice CTs have ratio and phase angle errors. As shown in Fig. 8.5, both the CTs have nominal ratio of n, CT_1 has an actual ratio of n_{1a} and phase angle error of β_1 while CT_2 has an actual ratio of n_{2a} and phase angle error of β_2. There will be difference in magnitude of secondary currents of CTs due to ratio error and difference in phase of secondary currents due to phase angle error. The phasor diagram of currents is shown in Fig. 8.6. If the differential current ($I_{1s} - I_{2S}$) will exceed the current setting (pick-up value) of the relay, there will be maloperation of the relay.

Copyrighted material

You have either reached a page that is unavailable for viewing or reached your viewing limit for this book.

You have either reached a page that is unavailable for viewing or reached your viewing limit for this book.

You have either reached a page that is unavailable for viewing or reached your viewing limit for this book.

You have either reached a page that is unavailable for viewing or reached your viewing limit for this book.

You have either reached a page that is unavailable for viewing or reached your viewing limit for this book.

You have either reached a page that is unavailable for viewing or reached your viewing limit for this book.

You have either reached a page that is unavailable for viewing or reached your viewing limit for this book.

You have either reached a page that is unavailable for viewing or reached your viewing limit for this book.

You have either reached a page that is unavailable for viewing or reached your viewing limit for this book.

You have either reached a page that is unavailable for viewing or reached your viewing limit for this book.

You have either reached a page that is unavailable for viewing or reached your viewing limit for this book.

You have either reached a page that is unavailable for viewing or reached your viewing limit for this book.

You have either reached a page that is unavailable for viewing or reached your viewing limit for this book.

You have either reached a page that is unavailable for viewing or reached your viewing limit for this book.

You have either reached a page that is unavailable for viewing or reached your viewing limit for this book.

You have either reached a page that is unavailable for viewing or reached your viewing limit for this book.

You have either reached a page that is unavailable for viewing or reached your viewing limit for this book.

You have either reached a page that is unavailable for viewing or reached your viewing limit for this book.

You have either reached a page that is unavailable for viewing or reached your viewing limit for this book.

You have either reached a page that is unavailable for viewing or reached your viewing limit for this book.

You have either reached a page that is unavailable for viewing or reached your viewing limit for this book.

You have either reached a page that is unavailable for viewing or reached your viewing limit for this book.

You have either reached a page that is unavailable for viewing or reached your viewing limit for this book.

You have either reached a page that is unavailable for viewing or reached your viewing limit for this book.

You have either reached a page that is unavailable for viewing or reached your viewing limit for this book.

You have either reached a page that is unavailable for viewing or reached your viewing limit for this book.

You have either reached a page that is unavailable for viewing or reached your viewing limit for this book.

You have either reached a page that is unavailable for viewing or reached your viewing limit for this book.

You have either reached a page that is unavailable for viewing or reached your viewing limit for this book.

You have either reached a page that is unavailable for viewing or reached your viewing limit for this book.

You have either reached a page that is unavailable for viewing or reached your viewing limit for this book.

You have either reached a page that is unavailable for viewing or reached your viewing limit for this book.

You have either reached a page that is unavailable for viewing or reached your viewing limit for this book.

You have either reached a page that is unavailable for viewing or reached your viewing limit for this book.

You have either reached a page that is unavailable for viewing or reached your viewing limit for this book.

You have either reached a page that is unavailable for viewing or reached your viewing limit for this book.

You have either reached a page that is unavailable for viewing or reached your viewing limit for this book.

You have either reached a page that is unavailable for viewing or reached your viewing limit for this book.

You have either reached a page that is unavailable for viewing or reached your viewing limit for this book.

You have either reached a page that is unavailable for viewing or reached your viewing limit for this book.

You have either reached a page that is unavailable for viewing or reached your viewing limit for this book.

You have either reached a page that is unavailable for viewing or reached your viewing limit for this book.

You have either reached a page that is unavailable for viewing or reached your viewing limit for this book.

You have either reached a page that is unavailable for viewing or reached your viewing limit for this book.

You have either reached a page that is unavailable for viewing or reached your viewing limit for this book.

You have either reached a page that is unavailable for viewing or reached your viewing limit for this book.

You have either reached a page that is unavailable for viewing or reached your viewing limit for this book.

You have either reached a page that is unavailable for viewing or reached your viewing limit for this book.

You have either reached a page that is unavailable for viewing or reached your viewing limit for this book.

You have either reached a page that is unavailable for viewing or reached your viewing limit for this book.

You have either reached a page that is unavailable for viewing or reached your viewing limit for this book.

You have either reached a page that is unavailable for viewing or reached your viewing limit for this book.

You have either reached a page that is unavailable for viewing or reached your viewing limit for this book.

You have either reached a page that is unavailable for viewing or reached your viewing limit for this book.

You have either reached a page that is unavailable for viewing or reached your viewing limit for this book.

You have either reached a page that is unavailable for viewing or reached your viewing limit for this book.

You have either reached a page that is unavailable for viewing or reached your viewing limit for this book.

You have either reached a page that is unavailable for viewing or reached your viewing limit for this book.

You have either reached a page that is unavailable for viewing or reached your viewing limit for this book.

You have either reached a page that is unavailable for viewing or reached your viewing limit for this book.

You have either reached a page that is unavailable for viewing or reached your viewing limit for this book.

You have either reached a page that is unavailable for viewing or reached your viewing limit for this book.

You have either reached a page that is unavailable for viewing or reached your viewing limit for this book.

You have either reached a page that is unavailable for viewing or reached your viewing limit for this book.

You have either reached a page that is unavailable for viewing or reached your viewing limit for this book.

You have either reached a page that is unavailable for viewing or reached your viewing limit for this book.

You have either reached a page that is unavailable for viewing or reached your viewing limit for this book.

You have either reached a page that is unavailable for viewing or reached your viewing limit for this book.

You have either reached a page that is unavailable for viewing or reached your viewing limit for this book.

You have either reached a page that is unavailable for viewing or reached your viewing limit for this book.

You have either reached a page that is unavailable for viewing or reached your viewing limit for this book.

You have either reached a page that is unavailable for viewing or reached your viewing limit for this book.

You have either reached a page that is unavailable for viewing or reached your viewing limit for this book.

You have either reached a page that is unavailable for viewing or reached your viewing limit for this book.

You have either reached a page that is unavailable for viewing or reached your viewing limit for this book.

You have either reached a page that is unavailable for viewing or reached your viewing limit for this book.

You have either reached a page that is unavailable for viewing or reached your viewing limit for this book.

You have either reached a page that is unavailable for viewing or reached your viewing limit for this book.

You have either reached a page that is unavailable for viewing or reached your viewing limit for this book.

You have either reached a page that is unavailable for viewing or reached your viewing limit for this book.

You have either reached a page that is unavailable for viewing or reached your viewing limit for this book.

You have either reached a page that is unavailable for viewing or reached your viewing limit for this book.

You have either reached a page that is unavailable for viewing or reached your viewing limit for this book.

You have either reached a page that is unavailable for viewing or reached your viewing limit for this book.

You have either reached a page that is unavailable for viewing or reached your viewing limit for this book.

You have either reached a page that is unavailable for viewing or reached your viewing limit for this book.

You have either reached a page that is unavailable for viewing or reached your viewing limit for this book.

You have either reached a page that is unavailable for viewing or reached your viewing limit for this book.

You have either reached a page that is unavailable for viewing or reached your viewing limit for this book.

You have either reached a page that is unavailable for viewing or reached your viewing limit for this book.

You have either reached a page that is unavailable for viewing or reached your viewing limit for this book.

You have either reached a page that is unavailable for viewing or reached your viewing limit for this book.

You have either reached a page that is unavailable for viewing or reached your viewing limit for this book.

You have either reached a page that is unavailable for viewing or reached your viewing limit for this book.

You have either reached a page that is unavailable for viewing or reached your viewing limit for this book.

You have either reached a page that is unavailable for viewing or reached your viewing limit for this book.

You have either reached a page that is unavailable for viewing or reached your viewing limit for this book.

You have either reached a page that is unavailable for viewing or reached your viewing limit for this book.

You have either reached a page that is unavailable for viewing or reached your viewing limit for this book.

You have either reached a page that is unavailable for viewing or reached your viewing limit for this book.

You have either reached a page that is unavailable for viewing or reached your viewing limit for this book.

You have either reached a page that is unavailable for viewing or reached your viewing limit for this book.

You have either reached a page that is unavailable for viewing or reached your viewing limit for this book.

You have either reached a page that is unavailable for viewing or reached your viewing limit for this book.

You have either reached a page that is unavailable for viewing or reached your viewing limit for this book.

You have either reached a page that is unavailable for viewing or reached your viewing limit for this book.

You have either reached a page that is unavailable for viewing or reached your viewing limit for this book.

You have either reached a page that is unavailable for viewing or reached your viewing limit for this book.

You have either reached a page that is unavailable for viewing or reached your viewing limit for this book.

You have either reached a page that is unavailable for viewing or reached your viewing limit for this book.

You have either reached a page that is unavailable for viewing or reached your viewing limit for this book.

You have either reached a page that is unavailable for viewing or reached your viewing limit for this book.

You have either reached a page that is unavailable for viewing or reached your viewing limit for this book.

You have either reached a page that is unavailable for viewing or reached your viewing limit for this book.

You have either reached a page that is unavailable for viewing or reached your viewing limit for this book.

You have either reached a page that is unavailable for viewing or reached your viewing limit for this book.

You have either reached a page that is unavailable for viewing or reached your viewing limit for this book.

You have either reached a page that is unavailable for viewing or reached your viewing limit for this book.

You have either reached a page that is unavailable for viewing or reached your viewing limit for this book.

You have either reached a page that is unavailable for viewing or reached your viewing limit for this book.

You have either reached a page that is unavailable for viewing or reached your viewing limit for this book.

You have either reached a page that is unavailable for viewing or reached your viewing limit for this book.

You have either reached a page that is unavailable for viewing or reached your viewing limit for this book.

You have either reached a page that is unavailable for viewing or reached your viewing limit for this book.

You have either reached a page that is unavailable for viewing or reached your viewing limit for this book.

You have either reached a page that is unavailable for viewing or reached your viewing limit for this book.

You have either reached a page that is unavailable for viewing or reached your viewing limit for this book.

You have either reached a page that is unavailable for viewing or reached your viewing limit for this book.

You have either reached a page that is unavailable for viewing or reached your viewing limit for this book.

You have either reached a page that is unavailable for viewing or reached your viewing limit for this book.

You have either reached a page that is unavailable for viewing or reached your viewing limit for this book.

You have either reached a page that is unavailable for viewing or reached your viewing limit for this book.

You have either reached a page that is unavailable for viewing or reached your viewing limit for this book.

You have either reached a page that is unavailable for viewing or reached your viewing limit for this book.

You have either reached a page that is unavailable for viewing or reached your viewing limit for this book.

You have either reached a page that is unavailable for viewing or reached your viewing limit for this book.

You have either reached a page that is unavailable for viewing or reached your viewing limit for this book.

You have either reached a page that is unavailable for viewing or reached your viewing limit for this book.

You have either reached a page that is unavailable for viewing or reached your viewing limit for this book.

You have either reached a page that is unavailable for viewing or reached your viewing limit for this book.

You have either reached a page that is unavailable for viewing or reached your viewing limit for this book.

You have either reached a page that is unavailable for viewing or reached your viewing limit for this book.

You have either reached a page that is unavailable for viewing or reached your viewing limit for this book.

You have either reached a page that is unavailable for viewing or reached your viewing limit for this book.

You have either reached a page that is unavailable for viewing or reached your viewing limit for this book.

You have either reached a page that is unavailable for viewing or reached your viewing limit for this book.

You have either reached a page that is unavailable for viewing or reached your viewing limit for this book.

You have either reached a page that is unavailable for viewing or reached your viewing limit for this book.

You have either reached a page that is unavailable for viewing or reached your viewing limit for this book.

You have either reached a page that is unavailable for viewing or reached your viewing limit for this book.

You have either reached a page that is unavailable for viewing or reached your viewing limit for this book.

You have either reached a page that is unavailable for viewing or reached your viewing limit for this book.

You have either reached a page that is unavailable for viewing or reached your viewing limit for this book.

You have either reached a page that is unavailable for viewing or reached your viewing limit for this book.

You have either reached a page that is unavailable for viewing or reached your viewing limit for this book.

You have either reached a page that is unavailable for viewing or reached your viewing limit for this book.

You have either reached a page that is unavailable for viewing or reached your viewing limit for this book.

You have either reached a page that is unavailable for viewing or reached your viewing limit for this book.

You have either reached a page that is unavailable for viewing or reached your viewing limit for this book.

You have either reached a page that is unavailable for viewing or reached your viewing limit for this book.

You have either reached a page that is unavailable for viewing or reached your viewing limit for this book.

You have either reached a page that is unavailable for viewing or reached your viewing limit for this book.

You have either reached a page that is unavailable for viewing or reached your viewing limit for this book.

You have either reached a page that is unavailable for viewing or reached your viewing limit for this book.

You have either reached a page that is unavailable for viewing or reached your viewing limit for this book.

You have either reached a page that is unavailable for viewing or reached your viewing limit for this book.

You have either reached a page that is unavailable for viewing or reached your viewing limit for this book.

You have either reached a page that is unavailable for viewing or reached your viewing limit for this book.

You have either reached a page that is unavailable for viewing or reached your viewing limit for this book.

You have either reached a page that is unavailable for viewing or reached your viewing limit for this book.

You have either reached a page that is unavailable for viewing or reached your viewing limit for this book.

You have either reached a page that is unavailable for viewing or reached your viewing limit for this book.

You have either reached a page that is unavailable for viewing or reached your viewing limit for this book.

You have either reached a page that is unavailable for viewing or reached your viewing limit for this book.

You have either reached a page that is unavailable for viewing or reached your viewing limit for this book.

You have either reached a page that is unavailable for viewing or reached your viewing limit for this book.

You have either reached a page that is unavailable for viewing or reached your viewing limit for this book.

You have either reached a page that is unavailable for viewing or reached your viewing limit for this book.

You have either reached a page that is unavailable for viewing or reached your viewing limit for this book.

You have either reached a page that is unavailable for viewing or reached your viewing limit for this book.

You have either reached a page that is unavailable for viewing or reached your viewing limit for this book.

You have either reached a page that is unavailable for viewing or reached your viewing limit for this book.

You have either reached a page that is unavailable for viewing or reached your viewing limit for this book.

You have either reached a page that is unavailable for viewing or reached your viewing limit for this book.

You have either reached a page that is unavailable for viewing or reached your viewing limit for this book.

You have either reached a page that is unavailable for viewing or reached your viewing limit for this book.

You have either reached a page that is unavailable for viewing or reached your viewing limit for this book.

You have either reached a page that is unavailable for viewing or reached your viewing limit for this book.

You have either reached a page that is unavailable for viewing or reached your viewing limit for this book.

You have either reached a page that is unavailable for viewing or reached your viewing limit for this book.

You have either reached a page that is unavailable for viewing or reached your viewing limit for this book.

You have either reached a page that is unavailable for viewing or reached your viewing limit for this book.

You have either reached a page that is unavailable for viewing or reached your viewing limit for this book.

You have either reached a page that is unavailable for viewing or reached your viewing limit for this book.

You have either reached a page that is unavailable for viewing or reached your viewing limit for this book.

You have either reached a page that is unavailable for viewing or reached your viewing limit for this book.

You have either reached a page that is unavailable for viewing or reached your viewing limit for this book.

You have either reached a page that is unavailable for viewing or reached your viewing limit for this book.

You have either reached a page that is unavailable for viewing or reached your viewing limit for this book.

You have either reached a page that is unavailable for viewing or reached your viewing limit for this book.

You have either reached a page that is unavailable for viewing or reached your viewing limit for this book.

You have either reached a page that is unavailable for viewing or reached your viewing limit for this book.

You have either reached a page that is unavailable for viewing or reached your viewing limit for this book.

You have either reached a page that is unavailable for viewing or reached your viewing limit for this book.

You have either reached a page that is unavailable for viewing or reached your viewing limit for this book.

You have either reached a page that is unavailable for viewing or reached your viewing limit for this book.

You have either reached a page that is unavailable for viewing or reached your viewing limit for this book.

You have either reached a page that is unavailable for viewing or reached your viewing limit for this book.

You have either reached a page that is unavailable for viewing or reached your viewing limit for this book.

You have either reached a page that is unavailable for viewing or reached your viewing limit for this book.

You have either reached a page that is unavailable for viewing or reached your viewing limit for this book.

You have either reached a page that is unavailable for viewing or reached your viewing limit for this book.

You have either reached a page that is unavailable for viewing or reached your viewing limit for this book.

You have either reached a page that is unavailable for viewing or reached your viewing limit for this book.

You have either reached a page that is unavailable for viewing or reached your viewing limit for this book.

You have either reached a page that is unavailable for viewing or reached your viewing limit for this book.

You have either reached a page that is unavailable for viewing or reached your viewing limit for this book.

You have either reached a page that is unavailable for viewing or reached your viewing limit for this book.

You have either reached a page that is unavailable for viewing or reached your viewing limit for this book.

You have either reached a page that is unavailable for viewing or reached your viewing limit for this book.

You have either reached a page that is unavailable for viewing or reached your viewing limit for this book.

You have either reached a page that is unavailable for viewing or reached your viewing limit for this book.

You have either reached a page that is unavailable for viewing or reached your viewing limit for this book.

You have either reached a page that is unavailable for viewing or reached your viewing limit for this book.

Index

A

Accessories of GIS 626
Accuracy Class of CTs 76
Accuracy limit factor or saturation factor 77
Accuracy limit primary current 77
Acquisition Time 462
Active Low-pass Filter 457
Actual Transformation Ratio 43
Adaptive Protection 637
ADC0800 459
ADC0808/ADC0809 466
ADC1210 and ADC1211 469
A/D Converter, Analog Multiplexer, S/H Circuit 457
Advantages of GIS 627
Advantages of SF_6 Circuit Breakers 561
Air Blast Circuit Breakers 553
Air-Break Circuit Breakers 547
Alarm Relays 45
Aliasing 387
AM3705 460
Amplitude Comparator 51
Analog Interface 389
Analog Multiplexer 460
Analog to Digital Converter 458
Angle Impedance (OHM) Relay 267
ANN-based Overcurrent Relay 246
ANN Modular Approach for Fault Detection, Classification and Location 523
Arcing Time 581
Aperture Time 462
Application of ANN to Generator Protection 530
Application of ANN to Overcurrent Protection 522
Application of ANN to Power Transformer Protection 526
Application of ANN to Transmission Lines Protection 522
Application of Artificial Intelligence to Power System Protection 520
Application of Wavelet Transform to Power System Protection 438
Arcing Ground 199
Arcing Horn 606
Arc Interruption 535
Arc Voltage 535
Artificial Intelligence 506
Artificial Neural Network (ANN) 506, 507
Artiicial Neural Network Design Procedure and Consideration 517
Attracted Armature Relays 33
Automatic Reclosing 20
Auto-reclosing 301
Auxiliary CTs 86
Auxiliary Relay 44
Auxiliary Switch 45

B

Back-Propagation Algorithm 514
Backstops 49
Back-up Protection 361
Balanced Beam Relays 35
Balanced (opposed) Voltage Differential Protection 346
Balanced Voltage (or Opposed Voltage) Scheme 312
Ballistic resistance 48

Copyrighted material

Bar Primary CTs 81
Basic Impulse Insulation Level (BIL) 618
Bearing Overheating Protection 360
Bearings 49
Biological Neural Networks 508
Bipolar to Unipolar Converter 469
Block Pulse Functions (BPF) 428
Block Pulse Functions Technique 427
Breaking Capacity 568
Buchholz Relay 368
Busbar Reactors 139
Bus-zone Protection 375

C

Carrier Acceleration Scheme 322
Carrier Aided Distance Protection 318
Carrier Blocking Scheme 323
Carrier Current Protection 19, 315
Causes of Overvoltages 592
Characteristics of Simple Differential Protection Scheme 336
Chemical Properties of SF_6 Gas 556
Choice of Characteristics for Different Zones of Protection 294
Circuit breaker 18, 533
Circulating Current Scheme 311
Classiication of CTs 80
Classiication of GIS 626
Clock 458
Combination of Current and Time-grading 230
Combined Earth Fault and Phase Fault Protective Scheme 240
Compact GIS system 627
Comparators 51
Compensation for Correct Distance Measurement 295
Computation of RHT Coeficients 421
Computation of the Apparent Impedance 400
Computation of Walsh Coeficients 409
Contacts 49
Continuous Wavelet Transform 434
Counter 48
Counterpoise wires 602, 603
Coupling Capacitor Voltage Transformers 92
Coupling Factor 601
CT Burden 68
CT Errors 74
Current Chopping 544
Current-graded System 229
Current Limiting Reactors 136
Current Setting 225
Current to Voltage Converter 454
Current Transformers 20, 65
Cut-off current 580

D

Data Acquisition System (DAS) 386
Defuzzification 520
Definite Overcurrent Relay 221
Delayed Auto-reclosing Scheme 303
Design Aspects of GIS 624
Differential Amplifier 455
Differential Current Protection 375
Differential Equation Technique 391
Differential Protection 19, 327
Differential Protection of 3-Phase Circuits 346
Differential Relays 327, 328
Directional Earth Fault Relay 240
Directional Overcurrent Relay 236
Directional Relay 481
Directional Relay Connections 235
Direct Testing 573
Direct transfer tripping (under-reaching scheme) 319
Disadvantages of GIS 627
Disadvantages of SF_6 Circuit Breakers 562
Discrete Fourier Transform Technique 393
Discrete Wavelet Transform 434
Discrimination between Fuses and Over-current Protective Devices 590
Discrimination between Two Fuses 589
Distance Protection 19
Double Line-to-Ground (2L-G) Fault 177

Copyrighted material

You have either reached a page that is unavailable for viewing or reached your viewing limit for this book.

Fuzzification 520
Fuzzy Logic 518
Fuzzy Systems 507

G

Gas insulated substation/switchgear (GIS) 622, 623
Generalised Interface for Distance Relays 501
Generalised Mathematical Expression for Distance Relays 487
Generator Reactors 138
Generator-transformer unit protection 352, 372
Genetic algorithm 507
Grounded system 205
Ground fault neutralizer 209
Grounding (Earthing) 198
Grounding through Grounding Transformer 211
Grounding Transformer 200
Ground wires 599

H

Haar functions 418
Haar Transform (HT) 418
Hadamard or Natural Ordering 405
Half-cycle Data Window DFT algorithm 399
Height of Ground Wire 601
High Impedance Relay Scheme 376
Highly integrated systems (HIS) 627
High Rupturing Capacity (HRC) Cartridge Fuse 585
High-speed Relays 16
High-Voltage CTs 87
High Voltage DC (HVDC) Circuit Breakers 566
Hinged Armature-Type Relays 34
Hybrid systems 627

I

Impedance and Reactance Diagrams 103
Impedance Relay 250, 475
Indirect Testing 574
Indoor CTs 81
Induction Cup Relay 41
Induction Disc Relay 38
Induction Relays 37
Inference 520
Input-Output Mapping 520
Input Quantities for Various Types of Distance Relays 269
Instantaneous Overcurrent Relay 222
Instantaneous Relays 16
Instrument transformers 65
Insulation Coordination 617
Integrated protection and control 639
Interfacing 453
Interfacing of ADC0800, Analog Multiplexer and S/H Circuits 464
Interfacing of A/D Converter ADC0800 462
Internal Fault Characteristics 337
Internal Overvoltages 592
Interruption of Capacitive Current 545
Interturn protection based on zero-sequence component 354
Inverse Deinite Minimum Time Overcurrent (I.D.M.T) Relay 222
Inverse-time Over-current Relay 222

K

Klydonograph 598

L

LF398 461
Lightning Arresters or Surge Diverters 607
Lightning Phenomena 593
Linear Couplers 80
Linear Function 511
Line-to-Line (L-L) Fault 174
Load-shedding and Restoration 629
Location of Reactors 138
Loss of Excitation 357

M

Magnetic Link 599
Making Capacity 569
Mann-Morrison Technique 390
Measurement of Reactance 491

Copyrighted material

You have either reached a page that is unavailable for viewing or reached your viewing limit for this book.

You have either reached a page that is unavailable for viewing or reached your viewing limit for this book.

You have either reached a page that is unavailable for viewing or reached your viewing limit for this book.

Supervisory Control and Data Acquisition (SCADA) 622, 640
Surge Absorber 614
Switched Schemes 299
Swivelling Characteristics 293
Symmetrical (balanced) Faults 97
Symmetrical Components 146
Symmetrical Fault Analysis 107
Symmetrical Faults 3
Synthetic Testing 574

T

Tank-earth Protection 373
Testing of Circuit Breakers 570
The isolated-phase GIS module 626
Thermal Relays 14, 43
Thermal Time-delay 47
Three-phase Auto-reclosing 303
Three-phase common module 626
Threshold Function 510
Time-current characteristics 221
Time-delay Relays 16
Time-graded System 228
Time-lag Relays 44
Time multiplier setting 226
Time SettinG 226
Touch Voltage 214
Transducers 18, 65
Transformer Protection 364
Transient Behaviour of CTs 77
Transley Scheme 313
Transley S Protection 313
Two Conductors Open 197
Types of Amplitude Comparators 53
Types of Faults 3
Types of Percentage Differential Relays 343
Types of Phase Comparators 56

U

Ultra High-speed Relays 16
Under-reach of Distance Relays 274
Ungrounded System 201
Unit Testing 574
Unsupervised Learning 513
Unsymmetrical Fault Analysis 168
Unsymmetrical Faults 3
Unsymmetrical (unbalanced) Faults 97

V

Vacuum Circuit Breakers 562
Very Inverse-time Overcurrent Relay 222
Voltage Transformer Ground-ing 211
Voltage Transformers 22, 89
VT Errors 90

W

Walsh Functions 403
Walsh-Hadamard Matrices 405
Walsh-Hadamard Transform Technique 402
Walsh or Sequency Ordering 405
Wavelet Fuzzy Combined Approach for Fault Classification 525
Wavelet Transform Technique 433
Wavelet Transform Versus Fourier Transform 437
Wave Shape of Voltage due to Lightning 595
Wire Pilot Protection 310
Wound Primary CTs 82

Z

Zero-Crossing Detector 453
Zero-sequence Diagrams of Generators 161
Zero Sequence Network 159, 160
Zero-sequence Networks of 3-phase Loads 160
Zero-sequence Networks of Transformers 162
Zones of Protection 9

Copyrighted material