HBRP PUBLICATION

Journal of Advancement in Electronics Design
Volume 7 Issue 2
e-ISSN:2584-2943
DOI: https://doi.org/10.5281/zenodo.10948546

Bluetooth Enabled LED Cricket Scoreboard

Aniket A. Bhogawar [1], Abhijeet V. Tupe [2*], Abhishek G. Yadav [3], S.H. More [4], K. G. Pise[5]

[1,2,3] Under Graduate Student, Department of Electronics & Telecommunication Engineering, Tatyasaheb Kore Institute of Engineering & Technology, Warananagar, Shivaji University, Warananagar, Kolhapur, Maharashtra, India

[4, 5] Assistant Professor, Department of Electronics & Telecommunication Engineering, Tatyasaheb Kore Institute of Engineering & Technology Warananagar, Shivaji University, Warananagar, Kolhapur, Maharashtra, India

[*]Corresponding Author
E-mail Id:- abhijeettupe8021@gmail.com

ABSTRACT

This abstract centers on designing and developing a cost-effective Bluetooth-enabled LED cricket scoreboard with a primary focus on reducing delay time during score display, aiming to significantly enhance the cricket match experience for players, spectators, and officials. The scoreboard seamlessly integrates Bluetooth technology with LEDs to ensure real-time transmission and instant display of match statistics, scores, player information, and game progress. The system incorporates Arduino-based hardware for LED control and Bluetooth communication, complemented by a dedicated mobile application functioning as an intuitive interface for scoreboard management. Through the mobile app, users can wirelessly interact with the scoreboard, thereby reducing delays by enabling swift updates of match data, configuring display preferences, and ensuring rapid data exchange between the app and the LED scoreboard. The emphasis on reducing delay time in score presentation underscores the commitment to delivering timely and accurate information, contributing to an enriched viewing experience for cricket enthusiasts, sports venues, educational institutions, and community cricket events. This represents an innovative approach, leveraging Bluetooth connectivity and LED technology to minimize delays and provide comprehensive, real-time match information, thereby modernizing and augmenting traditional cricket scoreboards.

Keywords:- *Arduino-based hardware, Cricket scoreboard, Match statistics, Mobile application interface, Real-time transmission, Score display, Wireless connectivity*

INTRODUCTION

Before LED cricket scoreboards, the scoring systems used in cricket matches were quite different and less sophisticated.

The standard cricket scoring included manual frameworks where the scores were empowered quite individuals utilizing different methodologies to show the consistent score and other match-related data. Here is a breakdown of the scenario before LED cricket scoreboards:

Manual Scoreboards: Initially, large manual scoreboards were used, typically made of wood or other materials, where the score and other match details were written or updated by hand. These boards often had rotating number panels or slots for numbers that could be flipped or changed to reflect the current score.

Announcements: Alongside the manual scoreboards and scorecards, announcers or commentators would regularly update the

Journal of Advancement in Electronics Design
Volume 7 Issue 2
e-ISSN:2584-2943
DOI: https://doi.org/10.5281/zenodo.10948546

spectators about the current score, the number of overs bowled, batsmen at the crease, and other important match details using microphones or speakers in the stadium.

Umpire Signals: Umpires would frequently signal the current score to the scorers and the players on the field using hand signals, which helped keep everyone updated about the match situation.

Limited Information Display: Compared to modern LED scoreboards, the information displayed on manual scoreboards was limited. They might only show the total score, the number of wickets fallen, and possibly the number of overs bowled.

Challenges in Accuracy and Visibility: Manual scoreboards were prone to human error, and sometimes, depending on the stadium's size or visibility, spectators might have found it difficult to keep track of the match's progress.

With technological advancements, LED scoreboards gradually replaced these manual methods, offering real-time updates, greater visibility, more detailed information, and increased accuracy. LED scoreboards revolutionized the spectator experience, providing comprehensive match data in a much more accessible and immediate manner.

METHODOLOGY

Innovative Approach with Under actuated Mechanisms

The system begins with a smartphone wirelessly transmitting cricket score updates to the HC-05 Bluetooth module. This module, connected to an Arduino, interprets the updates and subsequently communicates with an LED. The Arduino processes the information received from the smartphone, ensuring the real-time display of cricket scores on the LED screen [1] as shown in Figure 1.

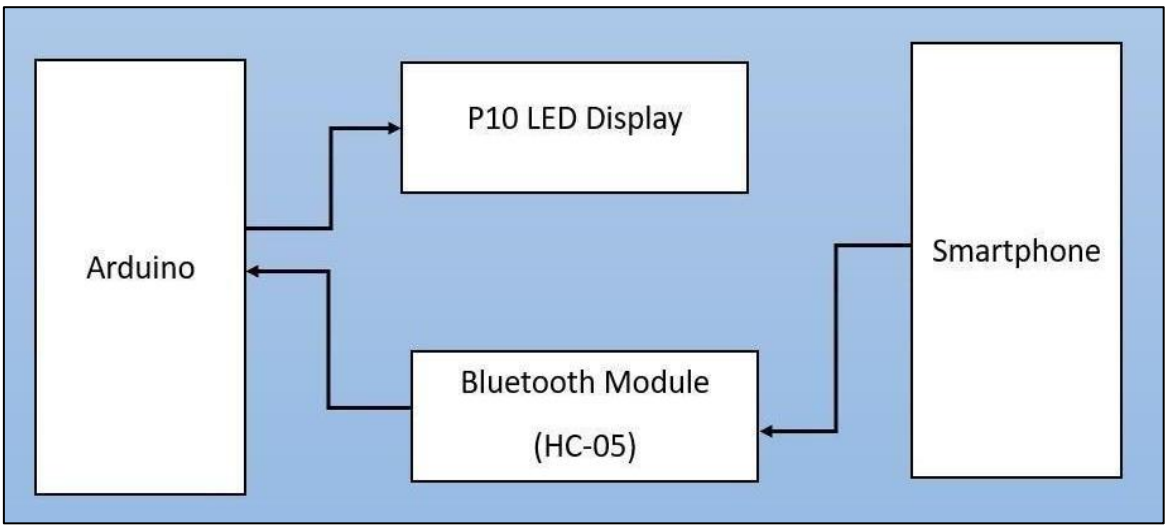

Fig.1:-*Block diagram of the system.*

Design Objective

Clearly state the primary objective of the project, emphasizing the development of a Bluetooth-enabled LED cricket scoreboard with under actuated mechanisms.

Briefly discuss the significance of this project in enhancing the cricket match experience for various stakeholders.

System Architecture

Provide an overview of the overall system architecture, highlighting the key components involved, such as Arduino Uno, LED, under actuated mechanism, HC-05 Bluetooth module, and a smartphone.

Journal of Advancement in Electronics Design
Volume 7 Issue 2
e-ISSN:2584-2943
DOI: https://doi.org/10.5281/zenodo.10948546

Explain how these components interact within the system to achieve the desired functionality [2].

Under actuated Mechanism Design

Delve into the design principles and considerations for the under actuated mechanism. Discuss the choice of under actuated mechanisms and their integration with the LED.

Highlight the innovative aspects of the under actuated mechanism and how it streamlines the control of the LED segments.

Bluetooth Communication Protocol

Explain the communication protocol between the smartphone and the HC-05 Bluetooth module. Discuss the data format for transmitting cricket score updates wirelessly.

Emphasize the efficiency and reliability of Bluetooth technology in facilitating real-time communication between the smartphone and the Arduino [3] as shown in Figure 2.

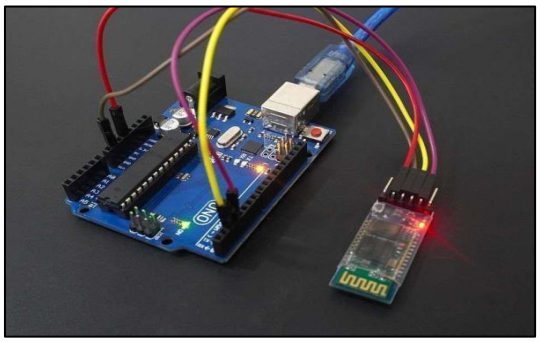

Fig.2:-*Bluetooth interfacing.*

Arduino Code Implementation

Provide a detailed insight into the Arduino code, elucidating how it interprets the received Bluetooth data and controls both the under actuated mechanism and the LED .

It discusses any specific algorithms or functions employed to process and display cricket scores accurately [4] as shown in Figure 3.

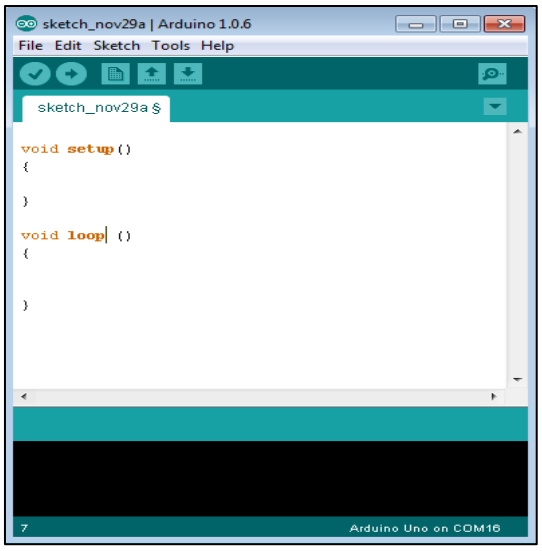

Fig.3:-*Code implementation.*

Journal of Advancement in Electronics Design
Volume 7 Issue 2
e-ISSN:2584-2943
DOI: https://doi.org/10.5281/zenodo.10948546

Integration with LED Display

Detail how the Arduino interacts with the LED to visually represent the cricket scores. Discuss the LED setup and any additional functionality incorporated. Highlight the role of the Arduino in synchronizing the display with real-time updates from the Smartphone [5] as shown in Figure 4.

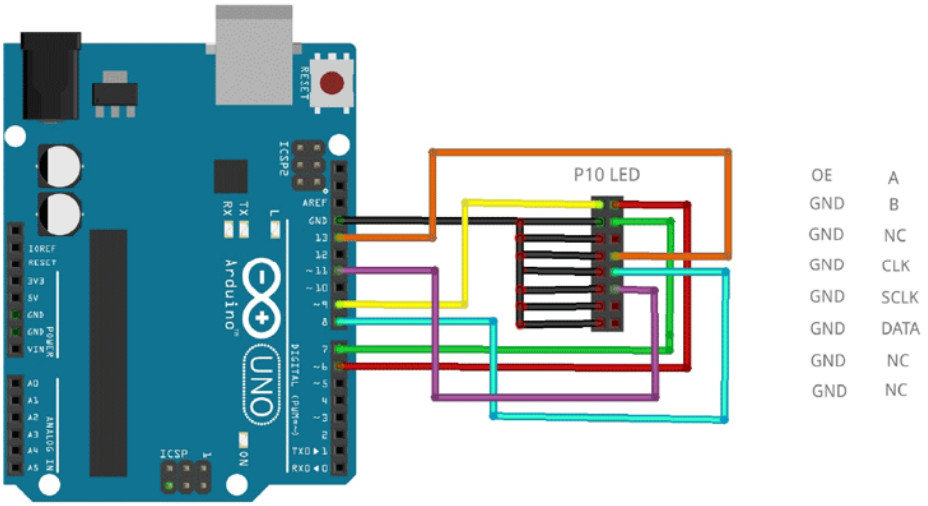

***Fig.4:-**LED interfacing.*

User Interface and Smartphone

User interface design and functionality emphasize how the Smartphone application enhances user interaction and contributes to the overall user experience as shown in Figure 5.

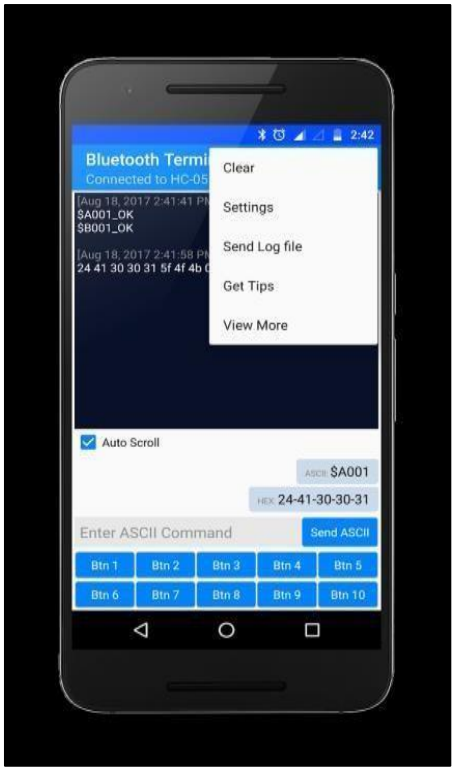

***Fig.5:-**UI and smartphone.*

Journal of Advancement in Electronics Design
Volume 7 Issue 2
e-ISSN:2584-2943
DOI: https://doi.org/10.5281/zenodo.10948546

Innovations and Contributions

Summarize the key innovations introduced in the design, such as the under actuated mechanism, Bluetooth integration, and the overall system architecture.

Discuss how these innovations contribute to minimizing delays and providing a comprehensive, real-time match information experience.

System Validation and Testing

Briefly touch upon the validation and testing procedures employed to ensure the functionality, accuracy, and reliability of the designed system.

Discuss any challenges encountered during the testing phase and the corresponding solutions as shown in Figure 6.

Fig.6:-*System testing.*

TESTING AND DEBUGGING

Pairing Devices

Ensure that the Bluetooth module is discoverable and can be paired with the mobile device. Test the pairing process to establish a stable connection between the scoreboard and the mobile app.[6]

Communication Testing

Implement debug statements or use serial communication to print messages in the Arduino code. Check the communication between the microcontroller and the mobile app. Verify that data sent from the app is received correctly by the scoreboard, and vice versa.

Journal of Advancement in Electronics Design
Volume 7 Issue 2
e-ISSN:2584-2943
DOI: https://doi.org/10.5281/zenodo.10948546

Data Format and Parsing
Ensure that the data format sent and received via Bluetooth is consistent. Implement proper parsing mechanisms on both the microcontroller and mobile app to interpret incoming data correctly.

Error Handling
Implement error-handling mechanisms to deal with unexpected scenarios, such as invalid data or connection disruptions. Use debugging tools, like LED indicators or serial print statements, to identify and troubleshoot errors.

Mobile App Testing
Test the mobile app thoroughly; especially the functionality related to Bluetooth communication. Verify that user inputs are correctly transmitted to the scoreboard. Check for edge cases and handle them gracefully in the app.

Real-World Testing
Conduct real-world testing by simulating different scenarios the scoreboard might encounter during actual use. Test the system in various environmental conditions to ensure its robustness.

Serial Debugging
Use the Arduino IDE's serial monitor for debugging. Print relevant information and variables to the serial monitor to track the program's flow and identify any issues.

Incremental Testing
Test the different components of the scoreboard incrementally. Start with basic functionalities such as updating the score, then move on to testing more complex features like overs and wickets.

Firmware Updates
If issues are identified during testing, iterate on the firmware by making necessary adjustments to the code. Upload the updated firmware to the microcontroller and retest the system.

User Interface (UI) Testing
Test the user interface of the mobile app to ensure it is intuitive and user-friendly. Check for any discrepancies between the app's interface and the actual functioning of the scoreboard.

Documentation and Logging
Keep detailed documentation of the testing process, including any issues encountered and solutions applied. Use logging mechanisms within the code to record events and aid in post-testing analysis.

User Feedback
Gather feedback from potential users during beta testing to identify any usability issues or unexpected behaviours. Incorporate user feedback into the debugging and improvement process.

Regression Testing
After implementing fixes, perform regression testing to ensure that existing functionalities still work as intended.

FUTURE SCOPE

Enhanced Interactivity
As technology continues to evolve, Bluetooth-enabled scoreboards can offer increased interactivity for users. Future iterations may allow spectators to engage with the scoreboard through their smartphones, enabling features such as live polling, interactive trivia games, or social media integration during matches.

Data Analytics
Bluetooth-enabled scoreboards have the potential to collect and analyze vast amounts of data during cricket matches. This data can be utilized for performance analysis, player statistics, and strategic insights.
Future advancements may involve incorporating artificial intelligence algorithms to provide real-time analytics and predictive insights for teams and coaches.

Journal of Advancement in Electronics Design
Volume 7 Issue 2
e-ISSN:2584-2943
DOI: https://doi.org/10.5281/zenodo.10948546

Integration with Wearable Technology
With the rise of wearable technology in sports, future Bluetooth-enabled scoreboards could integrate with wearable devices worn by players. This integration could enable features such as live player performance tracking, health monitoring, and injury prevention measures, enhancing player safety and performance.

Augmented Reality (AR) Enhancements
Future scoreboards may leverage augmented reality technology to provide immersive viewing experiences for spectators. AR overlays could enhance the visual display of match statistics, highlight key moments, or provide additional context and information during live matches.

Customization and Personalization
Bluetooth-enabled scoreboards can offer customizable features to cater to the preferences of different users. Future advancements may involve personalized user profiles, customizable display layouts, and predictive content recommendations based on user preferences and viewing history.

Integration with Smart Stadium Infrastructure
In smart stadiums of the future, Bluetooth-enabled scoreboards can be integrated with other IoT (Internet of Things) devices and infrastructure to create seamless and interconnected experiences for spectators. This integration could involve synchronizing the scoreboard with stadium lighting, sound systems, and digital signage to enhance the overall match atmosphere.

RESULTS
The Bluetooth-enabled LED cricket scoreboard project was successfully implemented, resulting in a functional system that allows users to wirelessly update cricket scores using a mobile app. The key features of the project include:

Bluetooth Connectivity
The Bluetooth module successfully establishes a reliable connection between the scoreboard and a mobile device. Users can pair their mobile devices with the scoreboard effortlessly.

LED Display
The LED accurately reflects the updated cricket scores, overs, and wickets in real-time. LED indicators provide clear visual cues for different game events.

Mobile App Integration
The mobile app provides an intuitive user interface for users to input and transmit cricket score updates. The app communicates seamlessly with the scoreboard, ensuring quick and accurate data transmission.

Error Handling
The system incorporates error-handling mechanisms to address unexpected scenarios, ensuring robust performance.

Real-World Testing
The project underwent thorough real-world testing, simulating various environmental conditions and user scenarios. The scoreboard demonstrated reliability and consistency during testing.

CONCLUSION
The Bluetooth-enabled LED cricket scoreboard project achieved its objectives, providing a modern and convenient solution for updating cricket scores in real-time. The successful implementation of the project highlights several key aspects:

Wireless Convenience
The Bluetooth connectivity eliminates the need for wired connections, providing users with greater flexibility and convenience in updating scores.

Journal of Advancement in Electronics Design
Volume 7 Issue 2
e-ISSN:2584-2943
DOI: https://doi.org/10.5281/zenodo.10948546

User-Friendly Interface
The mobile app's user-friendly interface makes it easy for users, including umpires and scorers, to input and transmit cricket scores effortlessly.

Reliability and Robustness
The project demonstrated reliability during extensive testing, showcasing its ability to perform consistently in real-world conditions.

Customizability
The project can be easily customized to accommodate additional features, such as displaying player statistics, match statistics, or integrating with other cricket-related data.

REFERENCES

1. John B (2021, June 25). *Communicate with Your Arduino Through Android*. Forum. *Allaboutcircuits.*
2. Hutauruk, S. (2018). Wireless Scoreboard implementation.
3. Joseph Akshay, (2020, April 29) Interfacing HC-05 with Arduino. Bluetooth module schematic.
4. Söderby, K. (2024, January 05). Arduino code Implementation.
5. Parida, D. (2019, December 3). *Light Emitting Diode (LED) with Arduino*. Arduino.cc.
6. B_O_B. (2019 Jun). P10 LED Display Testing and Troubleshooting.

Cite as :
Aniket A. Bhogawar, Abhijeet V. Tupe, Abhishek G. Yadav, S.H. More, & K. G. Pise. (2024). Bluetooth Enabled LED Cricket Scoreboard. Journal of Advancement in Electronics Design, 7(2), 8–15.
https://doi.org/10.5281/zenodo.10948546