Experiment Report:
Study of Boolean Logic Operations using Digital ICs

Abhijnan Saraswat Gogoi
Roll no.: 2411072
PHY241 Course

22nd, October 2025

Abstract

In this experiment, basic Boolean logic operations were studied using digital logic integrated circuits (ICs). The truth tables of the NOT, AND, OR, NAND, NOR, and EX-OR gates were experimentally verified. Also, the De Morgan's theorems were tested using combinations of NAND and NOR gates to validate the logical equivalence. The experimental results matched perfectly with the theoretical truth tables, confirming the fundamental postulates of Boolean algebra and the correctness of De Morgan's laws in digital logic systems.

1 Objective

- To verify the truth tables of the basic logic gates (NOT, AND, OR, NAND, NOR, and EX-OR).
- To verify the De Morgan's laws using digital ICs.

2 Theory

Digital circuits process discrete binary signals representing logical `0` (LOW) and `1` (HIGH) levels. The HIGH signal maybe at a higher voltage than the LOW signal (as in positive logic) or maybe at a lower voltage (as in negative logic). Boolean algebra provides the mathematical framework to describe and analyze these logical operations. The logic gates studied in this experiment are AND, OR, NOT, EX-OR, NOR and NAND. The symbols for some of the logic gates are given in figure 1. Each logic gate performs a specific Boolean function as summarised below:

- **NOT Gate (Inverter):** Performs logical negation. Its Boolean expression is $Q = \overline{A}$.
- **AND Gate:** Produces a HIGH output only if all inputs are HIGH. Expressed as $Q = AB$.
- **OR Gate:** Produces a HIGH output if any input is HIGH. Expressed as $Q = A + B$.
- **NAND Gate:** The complement of AND, $Q = \overline{AB}$.
- **NOR Gate:** The complement of OR, $Q = \overline{A + B}$.
- **EX-OR Gate:** Outputs HIGH if and only if inputs differ, $Q = A \oplus B = A\overline{B} + \overline{A}B$.

The truth tables for the logic gates is given in table 1. The two fundamental De Morgan's laws are:

$$\overline{A + B} = \overline{A} \cdot \overline{B} \tag{1}$$

$$\overline{A \cdot B} = \overline{A} + \overline{B} \tag{2}$$

These can be experimentally verified using combinations of NAND and NOR gates by comparing the outputs of both sides of the equations above. The logic circuits corresponding to these gates and laws are shown in Figure 2.

Table 1: Combined Truth Table for Logic Gates

A	**B**	$\boldsymbol{AB}$	$\boldsymbol{A+B}$	$\boldsymbol{A \oplus B}$	$\boldsymbol{\overline{AB}}$	$\boldsymbol{\overline{A+B}}$	$\boldsymbol{\overline{A}}$
0	0	0	0	0	1	1	1
0	1	0	1	1	1	0	1
1	0	0	1	1	1	0	0
1	1	1	1	0	0	0	0

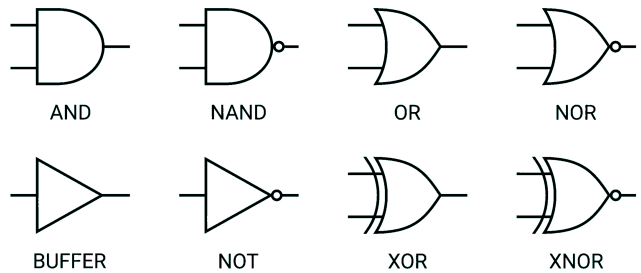

Figure 1: Symbols for some logic gates

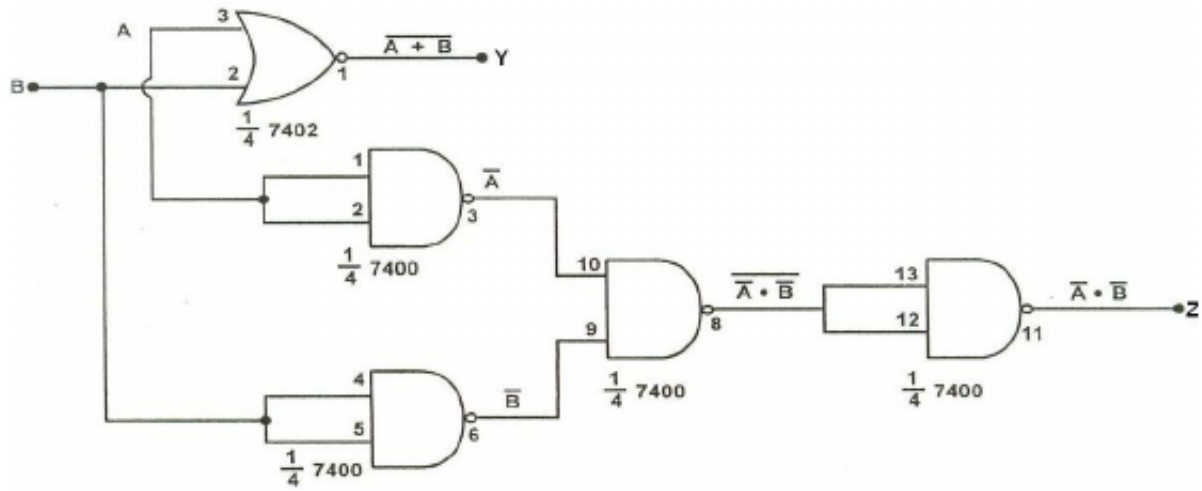

(a) Verification of $\overline{A + B} = \overline{A} \cdot \overline{B}$

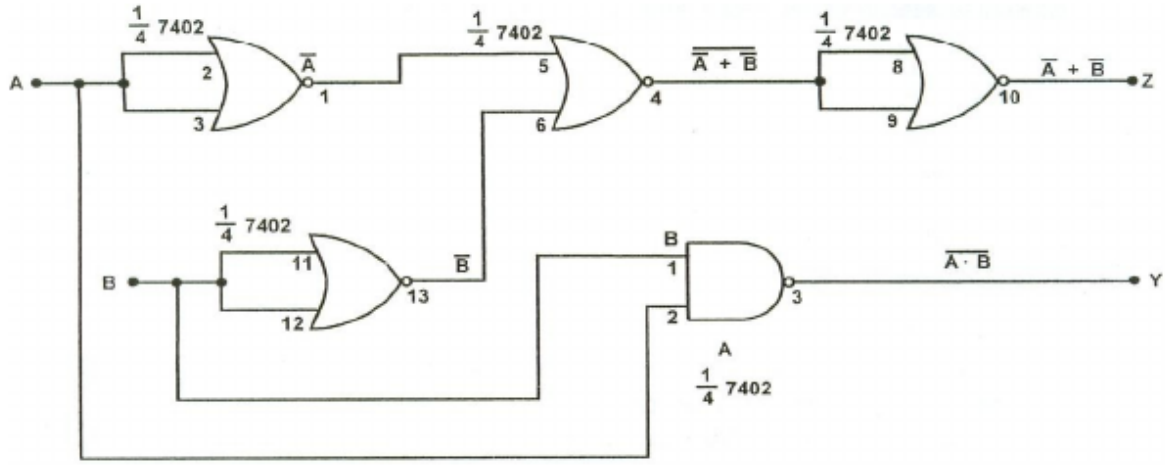

(b) Verification of $\overline{A \cdot B} = \overline{A} + \overline{B}$

Figure 2: Circuit diagrams for De Morgan's law verification.

3 Materials Required

(i) Digital ICs (7404, 7408, 7432, 7486, 7400, 7402), (ii) Resistors, (iii) D.C. power supply (5V), (iv) LEDs (to indicate logic levels), (v) Breadboard, (vi) Connecting wires.

4 Observations

4.1 Logic Gates

Table 2: The truth tables obtained by observation for the logic gates of the ICs

Gate No.	I/P (A)	O/P (Q)
1	1	0
	0	1
2	1	0
	0	1
3	1	0
	0	1
4	1	0
	0	1
5	1	0
	0	1
6	1	0
	0	1

(a) Inverter gate (NOT): IC 7404LS

Gate No.	I/P (A)	I/P (B)	O/P (Q)
1	0	0	0
	0	1	0
	1	0	0
	1	1	1
2	0	0	0
	0	1	0
	1	0	0
	1	1	1

(b) 2-input AND gate: IC 7408LS

Gate No.	I/P (A)	I/P (B)	O/P (Q)
1	0	0	0
	0	1	1
	1	0	1
	1	1	1
2	0	0	0
	0	1	1
	1	0	1
	1	1	1

(c) 2-input OR gate: IC 7432LS

Gate No.	I/P (A)	I/P (B)	O/P (Q)
1	0	0	0
	0	1	1
	1	0	1
	1	1	0
2	0	0	0
	0	1	1
	1	0	1
	1	1	0

(d) 2-input EX-OR gate: IC 7486LS

Gate No.	I/P (A)	I/P (B)	O/P (Q)
1	0	0	1
	0	1	1
	1	0	1
	1	1	0
2	0	0	1
	0	1	1
	1	0	1
	1	1	0

(e) 2-input NAND gate: IC 7400LS

Gate No.	I/P (A)	I/P (B)	O/P (Q)
1	0	0	1
	0	1	0
	1	0	0
	1	1	0
2	0	0	1
	0	1	0
	1	0	0
	1	1	0

(f) 2-input NOR gate: IC 7402LS

4.2 De-Morgan's Laws

Table 3: $\overline{(A+B)} = \overline{A} \cdot \overline{B}$

I/P (A)	I/P (B)	$\overline{A+B}$	X (observed)	$\overline{A}$	$\overline{B}$	$\overline{A} \cdot \overline{B}$	Y (observed)
0	0	1	1	1	1	1	1
0	1	0	0	1	0	0	0
1	0	0	0	0	1	0	0
1	1	0	0	0	0	0	0

Table 4: $\overline{(A \cdot B)} = \overline{A} + \overline{B}$

I/P (A)	I/P (B)	$\overline{A+B}$	X (observed)	$\overline{A}$	$\overline{B}$	$\overline{A} \cdot \overline{B}$	Y (observed)
0	0	1	1	1	1	1	1
0	1	1	1	1	0	1	1
1	0	1	1	0	1	1	1
1	1	0	0	0	0	0	0

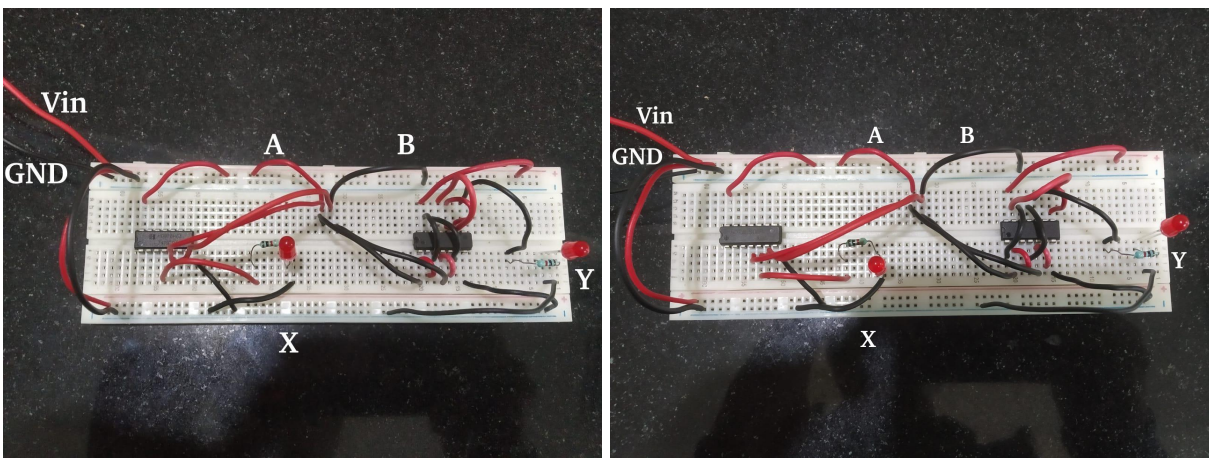

(a) Verification of $\overline{A+B} = \overline{A} \cdot \overline{B}$
Left IC: 7402 Right IC: 7400

(b) Verification of $\overline{A \cdot B} = \overline{A} + \overline{B}$
Left IC: 7400 Right IC: 7402

Figure 3: Circuit arrangement for the verification of the De Morgan's laws

5 Results

The truth tables of the NOT, AND, OR, NAND, NOR and EX-OR gates were verified (see table 2) and found to match the theoretical predictions.

All logic ICs functioned correctly, with observed output consistent across multiple (atleast two) gate sections on the ICs.

The De Morgan's laws were experimentally verified using combinations of NAND (of IC 7400) and NOR gates (of IC 7402) (see tables 3 and 4).

6 Discussion

The experiment confirmed the fundamental operations of Boolean logic using digital ICs. Each gate exhibited its expected output behavior, as indicated by LED indicators. The successful verification of De Morgan's laws demonstrates logical equivalence between complex and simplified circuit implementations. Propagation delay were observed due to internal IC characteristics and finite response times but did not affect logical correctness.

7 Conclusions

The experiment successfully demonstrated the operation of basic digital logic gates and verified De Morgan's theorems using the digital ICs. The observed truth tables matched theoretical values exactly, confirming the correctness of Boolean logic implementation in digital hardware.

8 Precautions

1. Ensure all ICs are properly oriented before inserting them into the breadboard.
2. Always connect the ground and +5 V supply pins correctly to avoid IC damage.
3. Connect the LEDs serially with a resistor to avoid damage to the LED.
4. Avoid loose connections and short circuits on the breadboard.
5. Turn off the power supply while altering circuit connections.