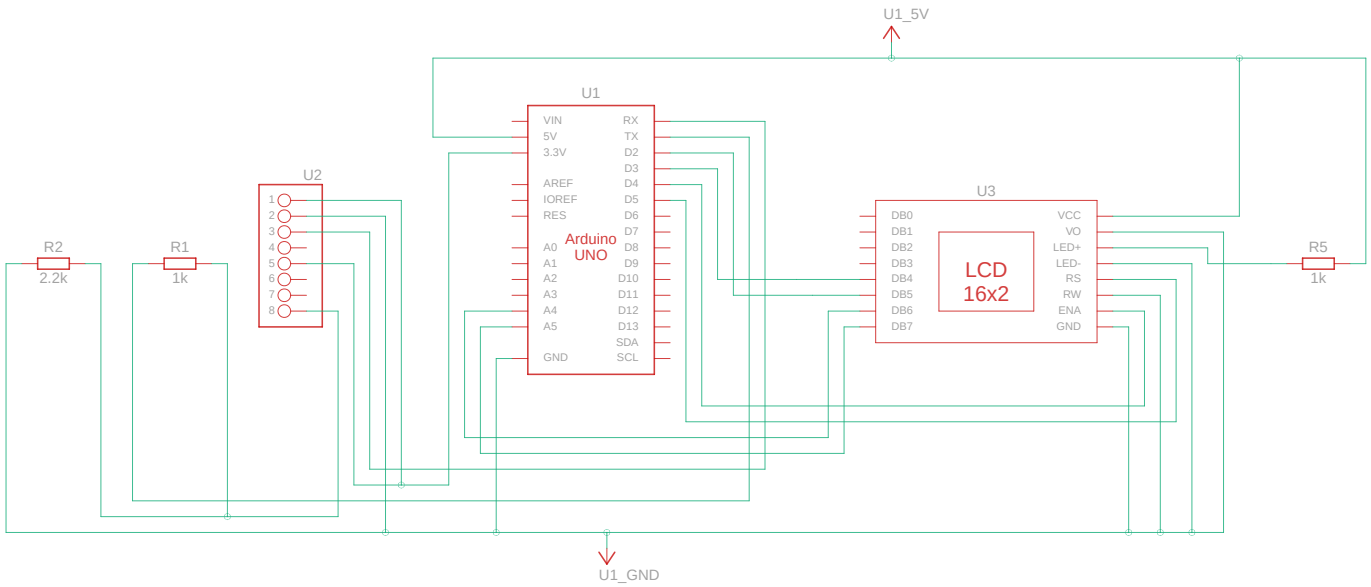

Made with Tinkercad®

Title: Smart Baggage Tracker using IoT	
Date: 12/01/2024, 18:45:09	Sheet: 1/1