Proceedings of the 6th International Conference on Communication and Electronics Systems (ICCES-2021)
IEEE Xplore Part Number: CFP21AWO-ART; ISBN: 978-0-7381-1405-7

SMART POSTURE DETECTOR USING IOT

Ms.Vidhya.B Department of ECE
Sri Krishna College of Engineering and Technology vidhyab@skcet.ac.in
Mr.Abdul Hayum.A Department of ECE
Hindusthan Institute of Technology aabdulhayum@gmail.com Mrs.Saranya.G
Department of ECE
Sri Krishna College of Engineering and Technology gsaranya@skcet.ac.in
AARTHI.M, AISHWARYA.V, DHANASHREE.K
UG Scholar
Email Ids: 17euec001@skcet.ac.in, 17euec006@skcet.ac.in, 17euec028@skcet.ac.in

2021 6th International Conference on Communication and Electronics Systems (ICCES) | 978-1-6654-3587-1/21/$31.00 ©2021 IEEE | DOI: 10.1109/ICCES51350.2021.9489099

ABSTRACT: This project serves with the purpose of an awareness to maintain a good posture for a better health and life. Owing to the fast-moving world, the time to take care of our health is being compromised heavily. Also, the present situation of pandemic, people are living with is the difficulty to physically visit the doctor to seek medications. In this digital era, everything has become automated and independent. This project aims to develop a feasible solution to the problem by detecting our posture quality and saving its data for our perusal and self-check. The scope of this project is to make a wearable kit along with a fixed one that suffices the problem of immobility since this can be carried anywhere. Also, the saved data acts as a record which helps us in knowing our scales of improvement in the effort taken in the correction of posture. The data is sent to the app by IOT via a wi-fi module.

Keywords: IoT, Wi-Fi module, smart posture.

I. INTRODUCTION

In this growing world of technology, urbanization and industrialization has brought a huge change in the lifestyle of the people. Every single profession nowadays is being computerized and are dealt in the digital platform. The price we pay for this is our health which is being compromised for a better pay and position. The significant yet most ignored factor is the monitoring of our body posture, the one which is mainly affected due to this computerized lifestyle of us. The posture is nothing but the way our muscles and skeleton hold the body upright. Neglecting the importance of maintain a good posture may result in various health problems including back ache, shoulder pain and also few serious problems like scoliosis, reduced lung function, gastro-intestinal pains and postural syndrome. Prolonged bad posture affects both our personal and professional life. In a survey that was conducted in 2017, the four-city survey showed that 18% of the Mumbai patients were under 34,34-54 were maximum and above 54 were only 5%. The main issue is that people fail to acknowledge the problem until it becomes severe and when the severity of the problem becomes high the medical expense and the stress becomes too much to handle.

II LITERATURE SURVEY

[7] The aim of the research project is to provide a solution to solve this problem by introducing an IOT based smart chair. The sensors which are fixed will be detecting the position of the user and the flags whenever there is an incorrect position. The model allows the user in collecting the real time data and in determining the patterns for every user. [8] This study consists of a smart mirror that works with its independent algorithm, behaving like a smart assistant. This prototype uses face recognition authentication, posture problem detection as its principle and maintains a preventive healthcare. This figure outs the posture of the user and analyses the changes of the body.[9] This model provides an chair with intelligence that is capable of detecting posture and also the correction of a prototype model is developed that is used in measuring the mapping of the pressure of the seater's pad and thus classifying the posture. This correction is done through the change of the movement of the user's seat and backrest by changing the pressure of eight pneumatic bladders.[10] This paper proposes a system that detects the sitting posture of the students sitting inside the class based upon the open pose using the monitor in the classroom for detecting it. The deep

Authorized licensed use limited to: Indian Institute of Information Technology Design & Manufacturing. Downloaded on November 15,2025 at 13:46:57 UTC from IEEE Xplore. Restrictions apply.

learning framework is being used in constructing the convolutional neural network, that in return would train the datasets hence detecting the sitting position of the students.[11] This model is a posture detection system which is made with the concept of having a cushion as its primary product and it is used in processing the pressure sensor signal in recognizing the posture mainly for the people in the wheelchair. The System will detect the user's position in three main processes, which is: Detection of posture by data level classification, Configuring the backward sensor operator and Comparison and recognition of results.[12] This system uses Leaky coaxial cable as the main principle which helps in detecting the posture with a purpose of using it for the patients who are at bed rest for long period of time. This is mainly done to prevent the bedsores that can be caused to the patients.[13] This system uses accelerometer, goniometer to identify the sitting posture. Though the system is effective it is limited to a sitting position. The device is placed next to the computer and according to the difference in the distance between the user and the computer the device works with the specific application of Postuino.[14] This paper explains the system where actuator is used in the form of biomechanical device used for posture detection. The sensor activity is showed via an avatar used in the application used for communication of the system. Though this makes an advanced posture detection system, the complexity factor and the non-economical factor is added as a limitation.

III SYSTEM ANALYIS

1.1 Proposed System

1.1.1 Description

The main idea we got from the existing system was to provide a solution that helps in the posture detection which is wearable and not just limited to the chair. The system uses a mems sensor to detect the posture and notifies the user about the same by mentioning the status of it as a bad or worse posture with the help of a voiceover. Along with this, a chair system is also provided where the IR sensors are being placed on the chair that provides the correctness of the user's seating position and when it is detected that the user is being seated in a bad position it notifies the same to the user by a voiceover. And the data is being recorded in the written form that is being sent to the IOT app via a wi-fi module where it is saved and also sent to the user's mobile phone. By using this data, the user's doctor will provide further medications. This model will provide a feasible solution for the back pain issues, spinal cord issues etc., It also provides the data of the user which is very much useful for the further analysis. This model will detect the user's posture even he is not seating in the chair. This model can motivate the user to exercise posture control and help to improve the upper back of posture of the user and detect various postures and thereby provide feedbacks. The knowledge of their own posture is then acquired by the user through the vibrational feedback. This project works in the manner that the kit is placed on the back, ie., the mems sensor will detect the posture of the user with respect to the angle of bending and the erectness of the spine. With respect to the level of bending the mems sensor will indicates the user by giving commands like your posture is worse, you are not in position in the form of a recorded voice. Along with this a wearable model like a chair-based system is also designed for old age peoples and for people with spinal cord issues. If those kinds of people sit on the chair, then the IR sensors which is being placed on the chair will detect the postures. If the user's posture is correct means it will detected by all the four IR sensors hence there is no need for any indication. But if the user's posture deformity tends to shift their position which causes them to move away from either one of the sensors, this will detect by the IR sensor, and it will further notify the user that his/her position is not okay and alerts them by a recorded voice. This process will take place, simultaneously and the data is being transferred to the mobile app through an IOT via a wifi module. The data is saved in the cloud and we can use it for future reference and the same will send to the user's doctor and they will provide medications accordingly.

IV. HARDWARE DETAILS

4.1 ARDUINO

The Arduino Uno is nothing but a microcontroller board where the term" Uno" referring one (Italian) indicating the release of Arduino 1.0.

Authorized licensed use limited to: Indian Institute of Information Technology Design & Manufacturing. Downloaded on November 15,2025 at 13:46:57 UTC from IEEE Xplore. Restrictions apply.

4.2 MICROCONTROLLER

Microcontroller, mainly used in integrating a number of components of a microprocessor system on to single chip. Here it is connected to the sensors, wi-fi module, the motor and the voice APR and the coding/program is being mount on it for the working and is implied when the connection is made on.

4.3 IR SENSOR

Infrared sensors in common are classified into two types as active and passive sensors. Here the passive type is being used and it comes as infrared detector type. The number of IR sensors used are four and all of them are placed on the backrest of the chair for the position detection which works by the simple mechanism of transmission and reception.

4.4 MEMS SENSOR

A MEMS sensor is a small-scale microelectromechanical component used in the detection and measurement of magnetic fields.

4.4.1 TYPES OF MEMS

Some types of MEMS sensor are

- MEMS accelerometers
- MEMS gyroscopes
- MEMS pressure sensor
- MEMS magnetic field sensors

4.4.2 APPLICATIONS OF MEMS

In general, it is used in different fields like automotive, military, space exploration and also for commercial purposes like in printers whereas here the mems sensor is being used for the posture detection when the person is in a standing position. Owing to the angle measured the value is being displayed.

4.5 RELAY

Relay is an operating switch which is electric. Magnetic field will be created when there will be a flow of current through the coil. There are two stages in the coil. One is on stage and the other is off stage. Relays will have two switch positions so that relays are known as double throw switches. The switch will be present in the relay which is used to completely separates the first and second circuit in the relay. There is no any electrical connection inside the relay. There will be only one link in the relay which is either magnetic or mechanical or electrical. The typical threshold value of the current for the relay is about 30milliAmpere for a 12Volt relay. Most of the IC's are not capable of providing the current so that the transistor is used for amplification of small IC current to a larger value which is required for the relay coil. Relays can either be A Pole Double Throw (SPDT) or Double Pole, Double Throw (DPDT) with a greater number of switch cases. Most of the relays are designed only for PCB mounting but they can also use as solder wires which are used for melting the plastic cases of the relay.

4.6 MOTOR

A motor is a device or also known as machine which is used for converting any form of energy into mechanical energy. The most common example of a heat engine is the internal combustion engine, in which heat which is produced from the combustion of a fuel is used for causing a rapid pressure which is produced from the gaseous combustion products. Electric motors are devices which are used for converting electrical energy into mechanical energy, pneumatic motors use compressed air, and the clockwork motors in wind-up toys uses elastic energy.

4.7 ACCELEROMETER

The accelerometer is an electromechanical device which is used for measuring forces caused by acceleration. It is also used for measuring the vibration, or for accelerating the motion of a structure. The piezoelectric material in the accelerometer is used for producing an electrical charge which is proportional to the external force. If the charge is proportional to the force and the mass is also constant, then the charge is also proportional to the acceleration. The high impedance charge output accelerometer is a piezoelectric crystal

Authorized licensed use limited to: Indian Institute of Information Technology Design & Manufacturing. Downloaded on November 15,2025 at 13:46:57 UTC from IEEE Xplore. Restrictions apply.

which is used for producing the electric charge and electric current. The electric current is proportional to the electric voltage. This type of accelerometers is used in high temperature application where low impedance models can't be used.

4.8 VOICE APR 9600

The APR9600 device is a voice recorder module which delivers single chip-voice recording. It provides both random and sequential access of multiple messages. The sample rates are user selectable which will enable the user to customize their own design.

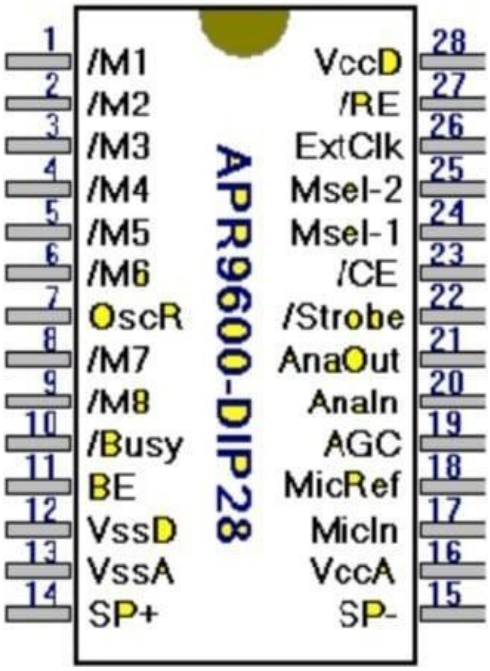

Fig 1: VOICE APR9600

4.8.1 FUNCTIONAL DESCRIPTION

The block diagram provides the internal architecture of APR9600. The left-hand side of the diagram includes analog inputs, differential microphone amplifier, integrated AGC circuit. The amplified signals are fed into ANA_IN and ANA_OUT. The anti- aliasing filter encounters the input signal. The response is adjusted automatically. The signal is ready to clock into the memory once the anti-aliasing filter is accomplished.

SAMPLING RATE AND VOICE QUALITY

The input of APR9600 device is based on the selected sampling frequency.

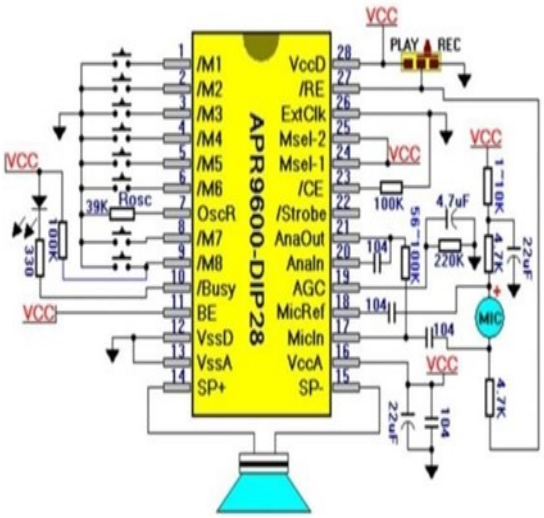

Fig 2: VOICE APR LAYOUT

The high sampling rate increases the bandwidth and the voice quality. It uses fewer memory cells as they increase effectively the duration capabilities and it also reduces the incoming signal bandwidth. It is the main drawback of the lower sampling rate.

V. SOFTWARE DETAILS

5.1 SMART POSTURE DETECTOR

The Smart Posture Detector is controlled using the Arduino code (Embedded C) and he web page is designed using Arduino IDE.

5.2 EMBEDDED C

5.2.1 DESCRIPTION

Embedded C is defined as the language extensions for C programming. The embedded C program controls the devices such as washing machines, mobile phones, security systems etc., It Consists of set of function where each and function contains a set of statements which are used to execute particular tasks. It is implemented using set of elements like a characters, keywords, variable and different data types. All these elements are used to write program.

Authorized licensed use limited to: Indian Institute of Information Technology Design & Manufacturing. Downloaded on November 15,2025 at 13:46:57 UTC from IEEE Xplore. Restrictions apply.

The device is monitored and controlled by using the programs which are designed by the user.

5.2.2 ARDUINO IDE

The Arduino IDE is nothing but an open - source platform for Integrated Development Environment (IDE) which is used to write a code either in C or C++. A compatible circuit board is used in which the programs are write and uploaded. Generally, two basic functions are required one is header files and the other is main program.

FIG 3: OUTPUT IMAGE

VI CONCLUSION

This project mainly aims at creating an awareness about the importance of maintaining a good posture to avoid the problems that would take place if it's not been given proper care. The project focus on detecting the user's posture and telling the position of it as ok or worse. Along with the detection on a chair, we have made it wearable by which the kit can be carried anywhere and be detected where it's not necessary that the user should be in a seating position. The chair system is made for the old, aged people by taking their comfort into mind. Also, the data saved in the app by IOT serves as a record for the observations that helps in the cope of improvement for people undergoing physiotherapy or exercises.

VII REFERENCES

[1] J.H. Cha, J.Y.Lee, and J.H.Lee, "Secure Smart Safety System Using Streetlight Infrastructure", The Journal of Korean Institute of Communication and Information Sciences, vol 40,no.5,pp. 851-856, May, 2015.

[2] Li, Y., and Aissaoui. R, "Smart Sensor, Smart Chair, Can it Predicts Your Sitting Posture?,"IEEE International Symposium on Industrial Electronics, Vol 4,pp.2574- 2759,July.2015.

[3] C.H.Kim, and J.M.Chung, Design of a 6- Axis Inertial "Sensor IC for Accurate Location and Position Recognition of M2M/IoTDevices,".The Journal of Korean Institute of Communications and Information Sciences, vol. 39C,no. 1,pp. 82-89,Jan,2014.

[4] S.Y.Jeon,J.H.Ahm and T.J.Leo, "Broadcast Data Delivery in IOT Networks with Packet Loss and Energy Constraint" vol.41,no.2,pp.851-856,Mar, 2016.

[5] N.Ahmed,H. Rahman, Md.I. Hussain, "A comparison of 802.11ah and 802.15.4 for IoT", ICT Express, 2016.

[6] Katahara Etsuko, My body is changed by 3cm sitting posture,Wisdom House,2015.

[7] C.K.Kim, "Good posture is a restoractive",Hainaim Publication 2016.

[8] Cooper, E. Health and safety statistics for Great Britain 2015.

[9] Rosero-Montalvo, Paul, Jaramillo, Daniel, Flores, Stefany, Pauluffo, Diego, Alvear, Vanessa, Lopez, Milton: Detection of Human Sitting position using data classification and dimensionality reduction. J Adv. Sci. Technol. Eng. Syst. 2(3), 749– 754 -2017.

[10] Kim, C.C., Basah, S.N., Ali, M.A., Fook, C.Y.: Wearable posture identification system for good sitting position. J. Telecommunication Electr.Comput. Eng. 10(No. 1–16) (2018).

[11] Ni, W.,Gao, Y., Lucev, Z., Pun, S.H., Cifrek, M., Vai, M.I., Du, M.: Human posture detection based on human body

[12] Vos, "GBD 2015 Disease and Injury Incidence and Prevalence Collaborators, "Global, Regional, and National Incident, Prevalence, and Years Lived with Disability for 310 Diseases and Injuries, 1990-2015: A Systematic Analysis for the Global Burden of Disease Study 2015," The Lancet, vol. 388, no. 10053, pp. 1545–1602, 2016.

[13] F. Tlili, R. Haddad, Y. Ouakrim, R. Bouallegue, and N. Mezghani, "A Survey on Sitting Posture Monitoring Systems," in Proceedings of the 2018 9th International Symposium on Signal, Image, Video and Communications (ISIVC), pp. 185–190, Rabat, Morocco, November 2018.

[14] R. C. Ailneni, K. R. Syamala, Kartheek, I.-S. Kim, and J. Hwang, "Influence of the wearable posture correction sensor on head and neck posture: Sitting and standing

Authorized licensed use limited to: Indian Institute of Information Technology Design & Manufacturing. Downloaded on November 15,2025 at 13:46:57 UTC from IEEE Xplore. Restrictions apply.

workstations," Work, vol. 62, pp. 27–35, 2019.

[15] A. A. Ishaku, "Flexible force sensors embedded in office chair for monitoring of sitting postures," in Proceedings of the IEEE International Conference on Flexible and Printable Sensors and Systems (FLEPS), pp. 1–3, Glasgow, UK, 2019.

Authorized licensed use limited to: Indian Institute of Information Technology Design & Manufacturing. Downloaded on November 15,2025 at 13:46:57 UTC from IEEE Xplore. Restrictions apply.