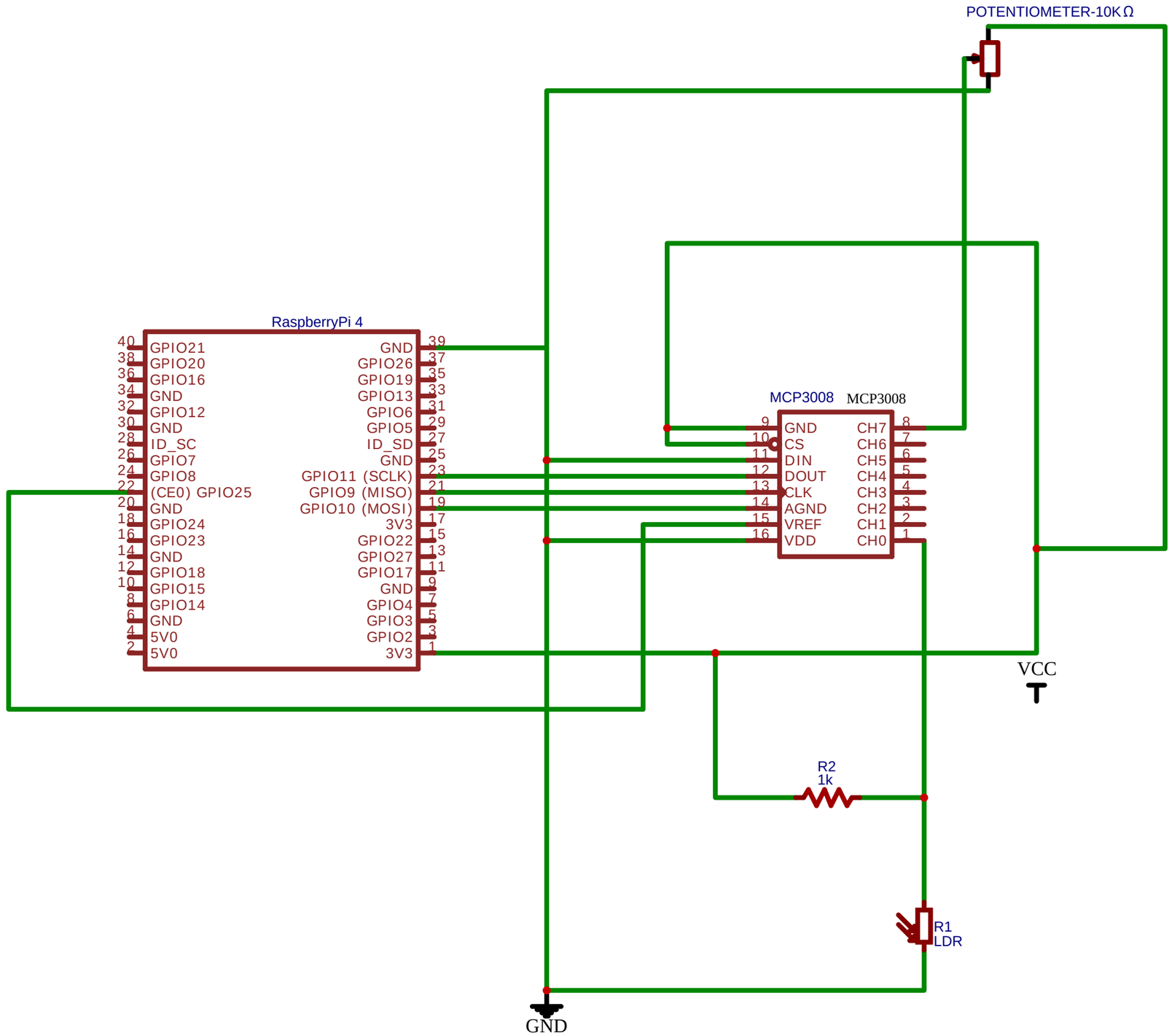

TITLE: RASPBERRY PI - A		REV: 1.0
嘉立创EDA	Company: IoT	Sheet: 1/1
	Date: 2023-03-11 Drawn By: Group 2	