MANUAL

User Manual
for Gait Pattern Recognition Device

Author 1:	Abishek Senthilkumar
Matriculation No.:	7025714
Course of Studies:	Business Intelligence and Data Analytics
Author 2:	Bruna Teixeira
Matriculation No.:	7026005
Course of Studies:	Business Intelligence and Data Analytics
Author 3:	Fedor Kotiaev
Matriculation No.:	7026007
Course of Studies:	Business Intelligence and Data Analytics
First examiner:	Prof. Dr. Elmar Wings
Submission date:	January 30, 2025

University of Applied Sciences Emden/Leer · Faculty of Technology · Mechanical Engineering Department
Constantiaplatz 4 · 26723 Emden · http://www.hs-emden-leer.de

Contents

1 Main Functions **2**

2 Key Features **3**

3 What's in the Box **4**

4 Getting Started **5**
4.1 Step 1: Activating the Device 5
4.2 Step 2: Attaching the Device 6
4.3 Step 3: Walking Test 6
4.4 Step 4: Visual Feedback and Alerts 7

5 Battery Information **10**

6 Powering device **11**
6.1 Power System Overview 11
6.2 Supplying Power via the VIN Pin 11
6.3 Battery Connected to the VIN Pin Alongside a USB Connection 13

7 Battery modification(optional) **14**
7.1 Using a 3.3V Battery 14

8 Maintenance **17**
8.1 How to Replace the Battery 18

9 Troubleshooting **24**
9.1 Device not working-no any indications 24
9.2 Abnormal Gait Detection Seems Inaccurate 25

10 Specifications **27**

1 Main Functions

The primary function of the system is to assist in identifying potential health issues related to abnormal gait patterns.

The system analyzes the user's walking pattern on a flat surface and determines whether the gait is normal or abnormal. The assessment result is displayed via an LED light.

If an abnormal gait pattern is detected, the system triggers a red LED light. For a normal gait, a blue light is displayed.

This wearable device is strapped onto the user's leg, providing insights into potential gait abnormalities, offering an in-home solution that typically requires medical supervision.

2 Key Features

Device Highlights:

1. **Compact Size**: The gait pattern device has a case size of 72mm x 53mm.
2. **No Internet or Bluetooth Needed**: The device operates autonomously, providing visual feedback via LEDs.
3. **Power Efficient**: Low power consumption runtime of 4 hours in active mode.
4. **Accurate Gait Detection**: Utilizes a 9-axis IMU to analyze walking patterns and detect abnormalities.
5. **Visual Alerts:**
   - **Blue LED**: Indicates normal gait.
   - **Red LED**: Indicates abnormal gait.
   - **Black LED**: Signals a data error.
   - **Yellow LED Blinking** : Indicates a low battery level.
6. **Durable Design**: Operates in a temperature range of -40°C to 85°C.

3 What's in the Box

- **Gait Pattern Device:** Main device for analyzing gait patterns, with the battery already installed.
- **2x Spare CR2032 Battery:** Two spare CR2032 batteries are provided for replacement as needed.

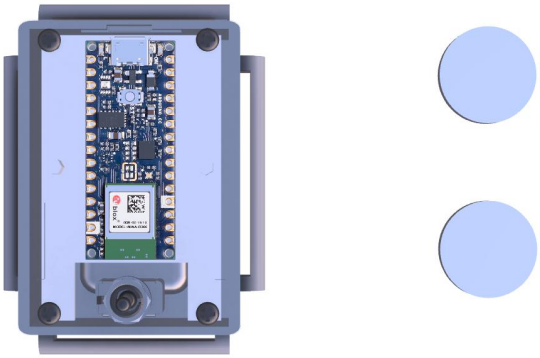

Figure 1: Device Gait Pattern Recognition ,spare batteries.

4 Getting Started

4.1 Step 1: Activating the Device

1. **Turn On the Device:**
   The device comes with the battery already installed. Slide the power switch to the ON position. A green light, located on the left side of the USB port at the bottom of the dashboard, indicates the device is powered and ready for use. If the green LED does not light up, please refer to the Troubleshooting section.

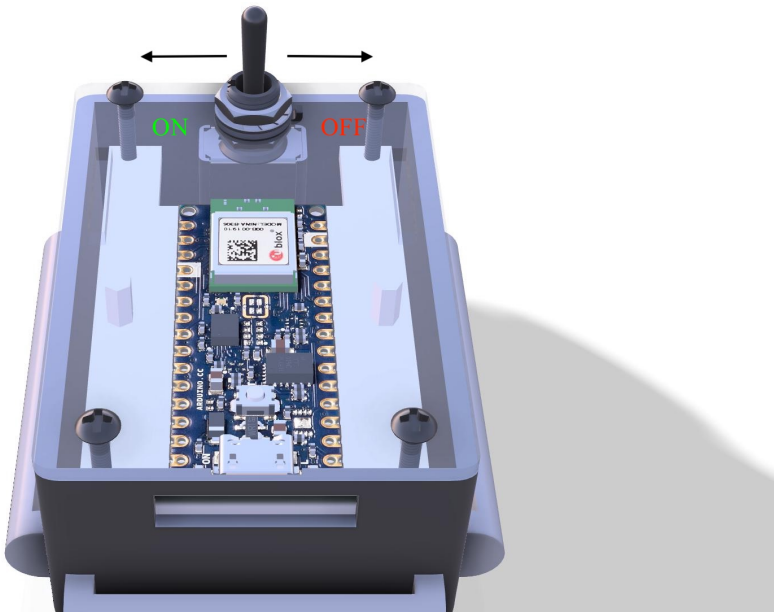

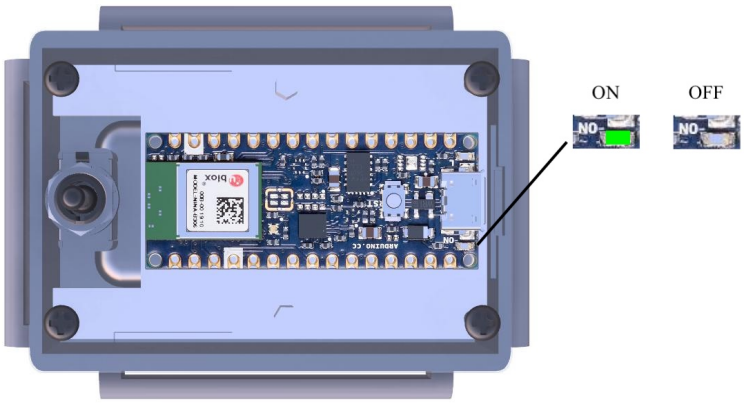

4.2 Step 2: Attaching the Device

1. **Secure the Device to Your Foot:**
   Use the adjustable strap provided to securely fasten the device to the top of your foot. Ensure the strap is snug but comfortable, allowing for natural movement. Position the device as shown in the provided photo, with the power button facing upwards toward your leg. Make sure the device is securely fastened and seated tightly.

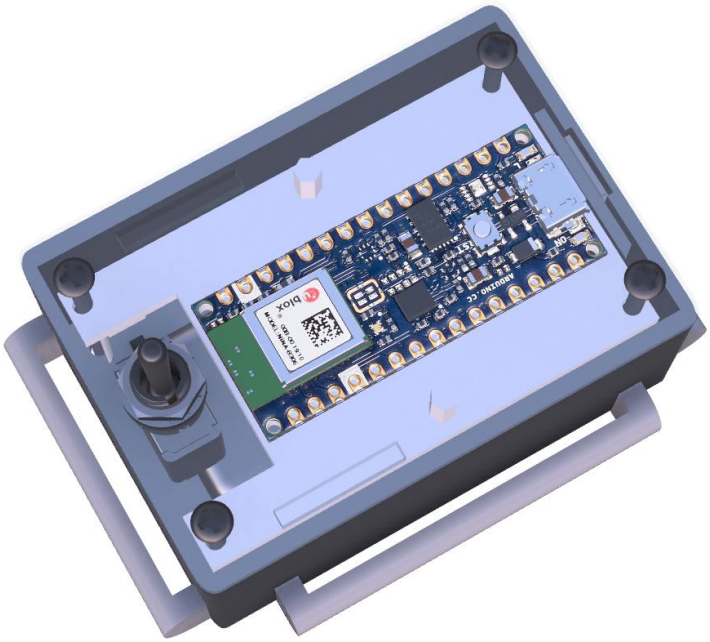

4.3 Step 3: Walking Test

1. **Performing the Walking Test:**
   Begin walking on a flat surface at a normal pace. The device will automatically begin monitoring your gait pattern.

4.4 Step 4: Visual Feedback and Alerts

The device provides real-time visual feedback based on the gait pattern analysis through an LED located in the middle of the dashboard, close to the power button. Refer to the provided photo and sketches for the exact LED location.

- **Blue LED**: Indicates normal gait.

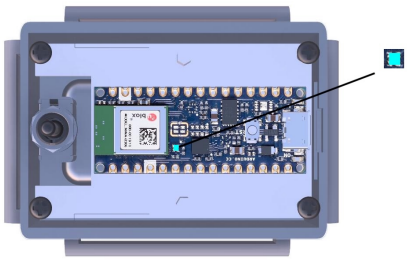

- **Red LED:** Abnormal gait detected, signaling potential health issues.

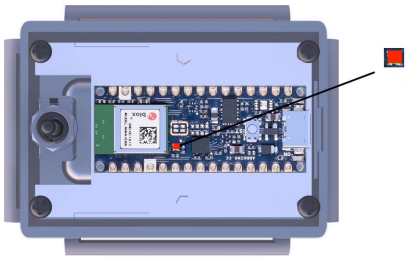

- **Black LED:** Indicates a data error, suggesting an issue with the sensor or data processing.

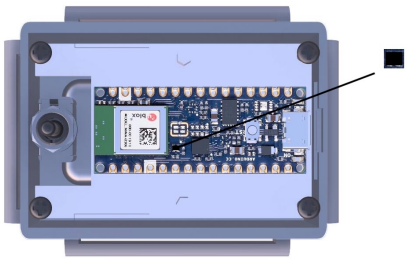

- **Yellow LED Blinking :** Indicates a low battery level.

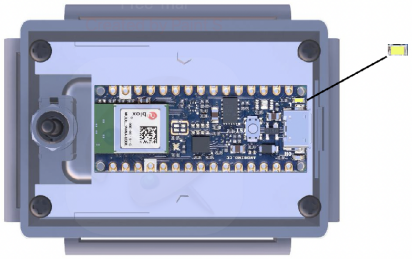

Free Trial

5 Battery Information

- **Battery Holder:**
  The device is equipped with a coin cell battery holder that holds two 20mm CR2032 batteries, providing a nominal 6V with approximately 220 mAh total capacity.

- **Runtime:**
  The device is expected to run for no less than 4 hours in active mode and up to 4 months in sleep mode.

- **Low Battery Indicator:**
  If the power LED (LED 1) dims or flickers, it indicates that the battery charge is around 40%. If the orange power LED (located in the middle of the board, close to the button—refer to the picture) lights constantly with an orange light, it indicates the battery level is below 25%.

- **Battery Replacement:**
  To replace the batteries, refer to Section 7.1.

Figure 2: CR2032.

6 Powering device

This chapter explains the steps and considerations for powering the board with a 6V battery which is supplied with the set and other ones.

6.1 Power System Overview

The onboard voltage regulator (MPM3610 DC-DC) steps down the input voltage on the VIN pin to 3.3V, which powers the board. The acceptable input voltage range 6for the VIN pin is **4.5V to 21V** .

6.2 Supplying Power via the VIN Pin

- The **VIN pin** accepts an input voltage of 4.5V to 21V.
  VIN: This pin can be used to power the board with a DC voltage source. If the power is fed through this pin, the USB power source is disconnected. This pin is an **INPUT**. Respect the voltage limits to ensure the proper functionality of the board .

- A 6V battery can be connected directly to the **VIN** pin (refer to Figure 6) using a toggle switch for the positive terminal and the **GND** pin for the negative terminal. The onboard voltage regulator will convert the 6V to 3.3V to power the board .

1. **Connect to VIN Pin:** Attach the positive terminal of the battery to the VIN pin thought toggle switch and the negative terminal to the GND.6

2. **Test the System:** Power the board and observe the onboard LED indicators to ensure proper functionality.

Source: Arduino Nano 33 BLE Official Store Page.

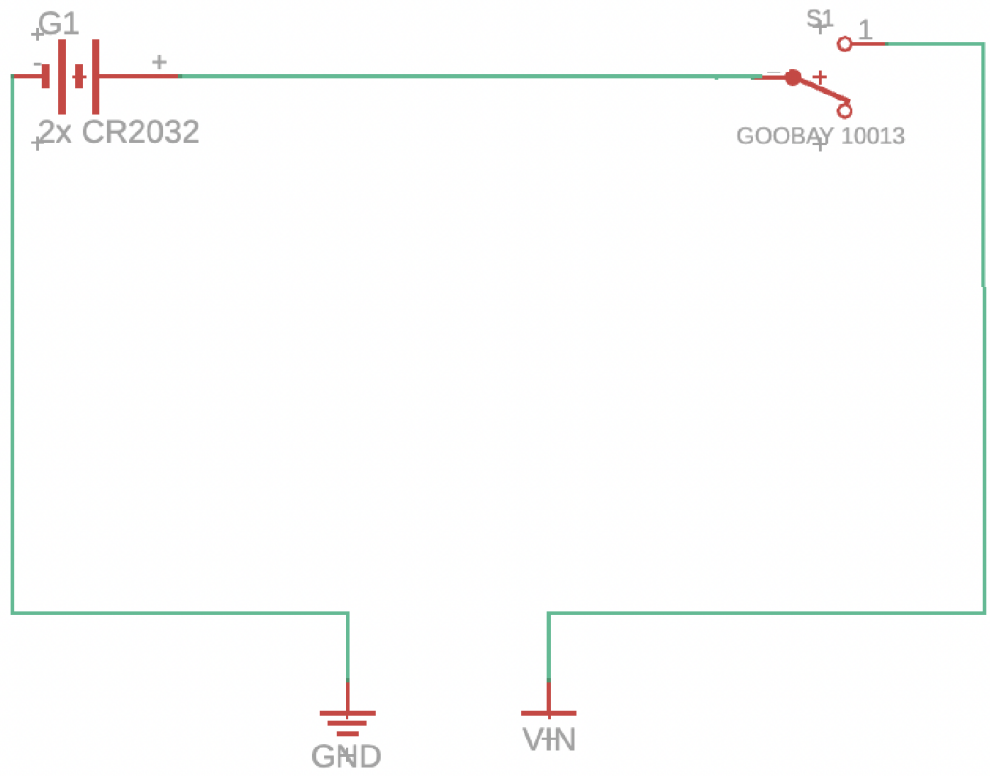

Figure 3: Battery Circuit

Component Description:

- **G1:** Battery pack (6V, 2x CR2032 cells), supplying power to the circuit.
- **S1:** GOOBAY 10013 toggle switch:
  - Connected to the positive terminal of the battery.
  - Controls the power supply to the device (Arduino Nano 33 BLE Sense).
  - Has two positions:
    - **Open:** Disconnects the circuit, effectively cutting off the power supply.
    - **Close:** Completes the circuit, enabling power to flow to the Arduino Nano 33 BLE Sense.
- **GND:** Ground pin of the Arduino Nano 33 BLE Sense, connected to the negative terminal of the battery.6
- **VIN:** Voltage input pin of the Arduino Nano 33 BLE Sense, where the positive terminal of the battery is connected to supply power.6

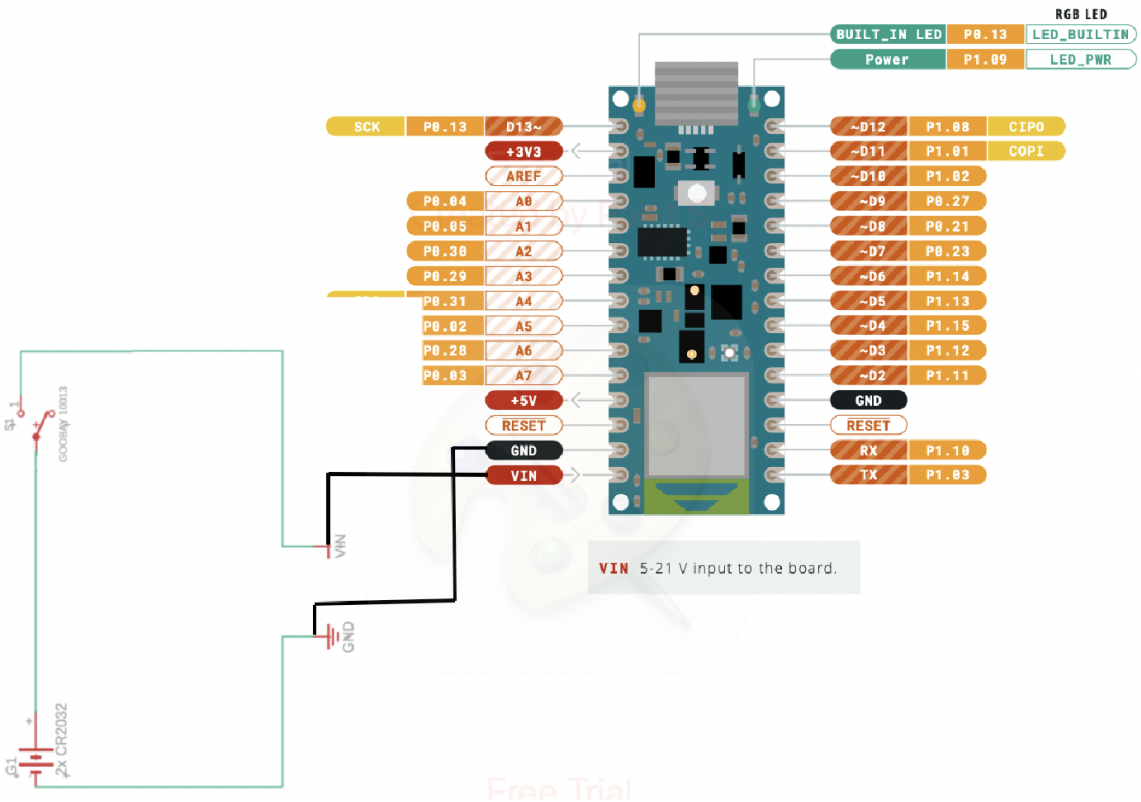

Figure 4: Battery Circuit and Board

6.3 Battery Connected to the VIN Pin Alongside a USB Connection

When a battery is connected to the VIN pin alongside a USB connection, the Arduino Nano 33 BLE Sense's power system ensures safe operation through diode isolation and voltage regulation.

The onboard diodes (**D2** and **D1**) play critical roles in this configuration:

- If both USB and VIN are connected, the **VIN pin** takes priority, isolating the USB power supply. The diodes **D2** and **D1** prevent backflow from the VIN pin to the USB power line, protecting the USB source and board components.
- The voltage regulator (**MPM3610**) steps down the input voltage from VIN (4.5V–21V) or USB (5V via D2) to a stable 3.3V, ensuring safe operation of the board.
- If only USB is connected, power flows through **D2** to the VIN pin, enabling the MPM3610 regulator to function.
- If only a battery is connected to VIN, the regulator directly steps down the battery voltage to power the board.

The priority of power sources ensures that the board is safely powered, regardless of whether one or both sources are connected. The voltage regulator (**MPM3610**) consistently provides a stable 3.3V to the board under all conditions.

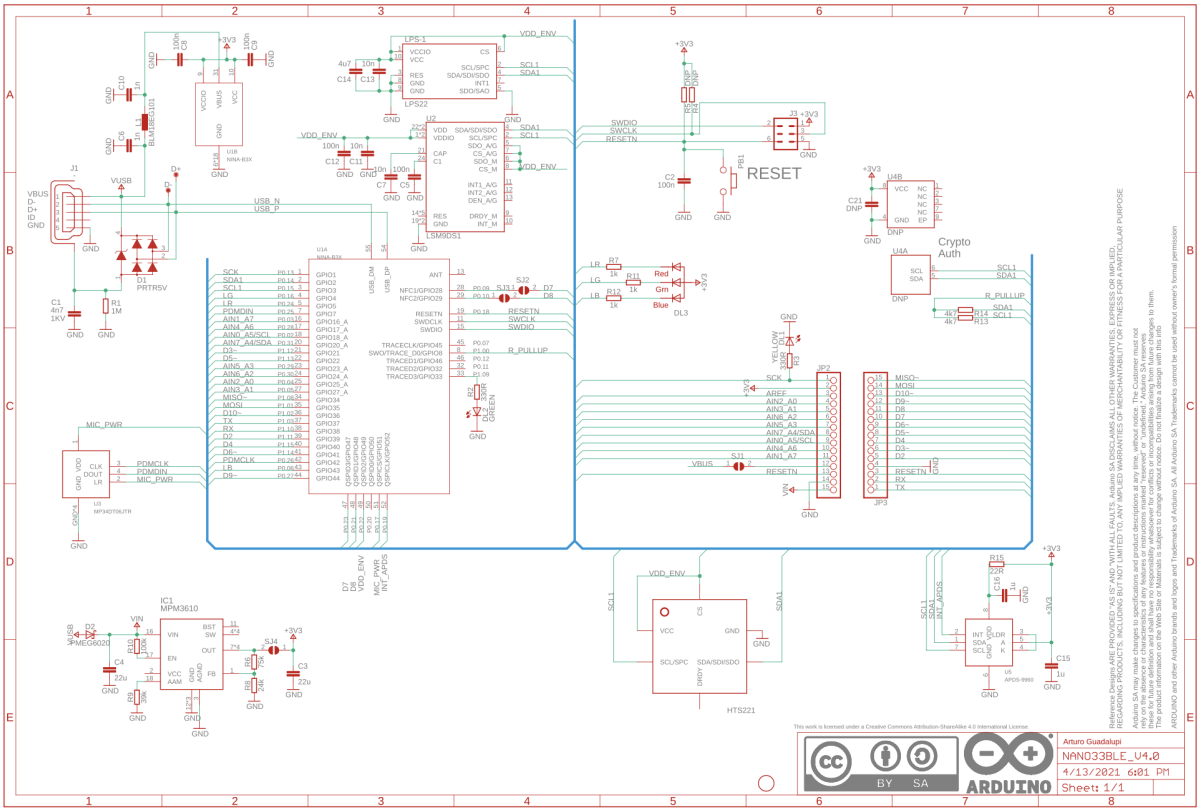

Figure 5: Schematic

Refer to this schematic for a detailed diagram showing the interaction between USB, VIN, diodes **D2** and **D1**, and the voltage regulator.

7 Battery modification(optional)

If you plan to use a battery with a voltage lower than 4.5V, such as a 3.3V battery, you will need to make some modifications to the board for compatibility. This ensures that the Arduino Nano 33 BLE Sense Light operates safely and effectively.

7.1 Using a 3.3V Battery

When supplying a 3.3V battery, the voltage regulator on the board is bypassed. Follow these steps:

1. **Direct Connection to 3.3V Pin:**
   - Connect the positive6 terminal of the 3.3V battery to the **3.3V pin**.
   - Connect the negative6 terminal to the **GND pin**.
2. **Cut the VUSB Jumper:**
   - Locate the **VUSB jumper trace** on the back of the board.

- Use a sharp knife or a small precision tool to carefully cut the trace. Cutting this jumper ensures there is no conflict between the USB power supply and the battery.
- Verify the modification using a multimeter to confirm that there is no continuity between the VUSB pads.

Important Notes:

- After cutting the jumper, the USB connection will only work for data transfer (e.g., uploading code). It will no longer provide power to the board.
- The board must always be powered by an external battery or another suitable power source when the VUSB jumper is cut.
- For detailed pin configuration and additional specifications, refer to the official Arduino Nano 33 BLE pinout documentation.

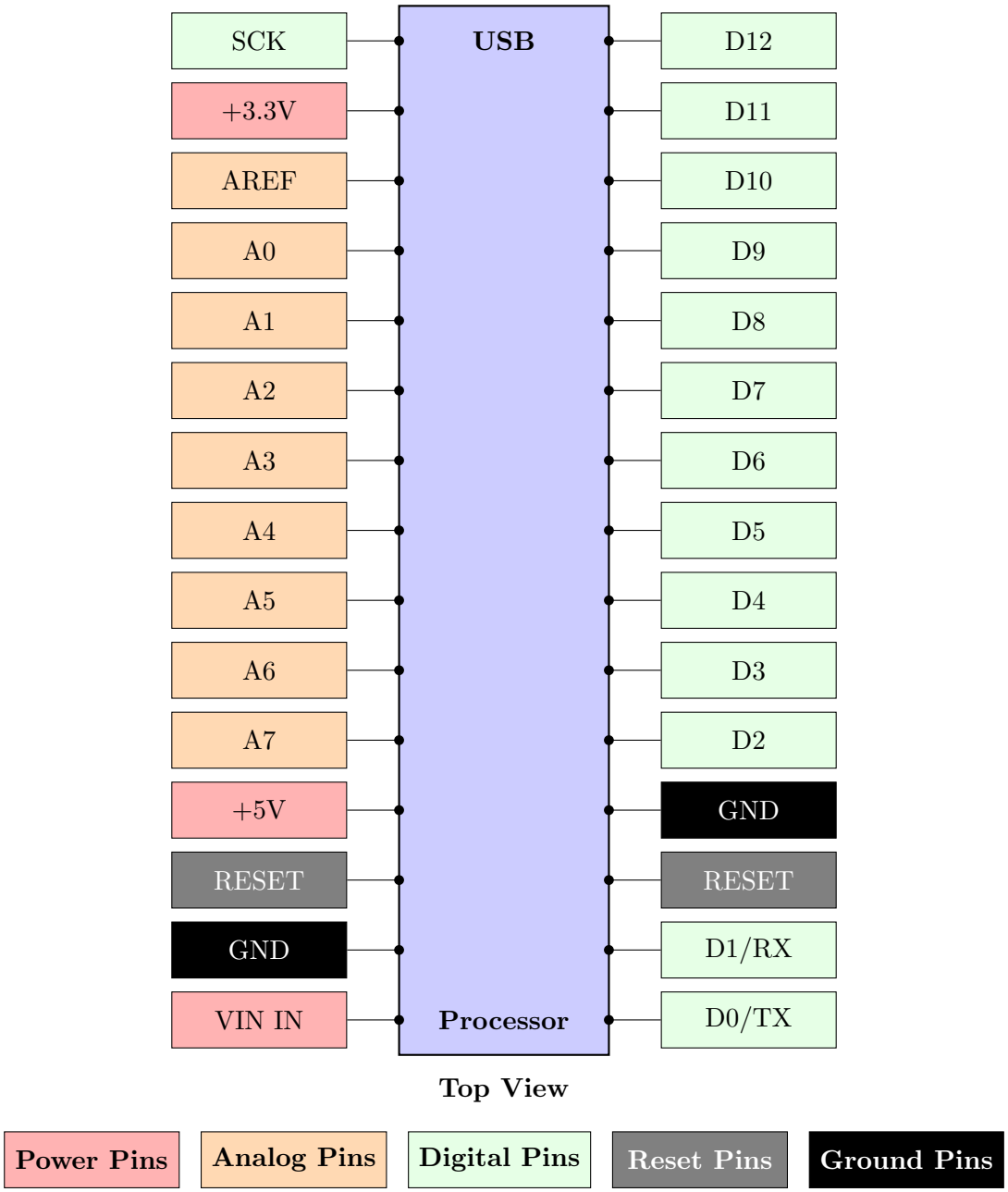

Figure 6: Arduino Nano 33 BLE Pins

8 Maintenance

- **Battery:** Replace 2 x CR2032 batteries every 4 months. Refer to Section 6.1 (Battery Replacement) for detailed instructions.

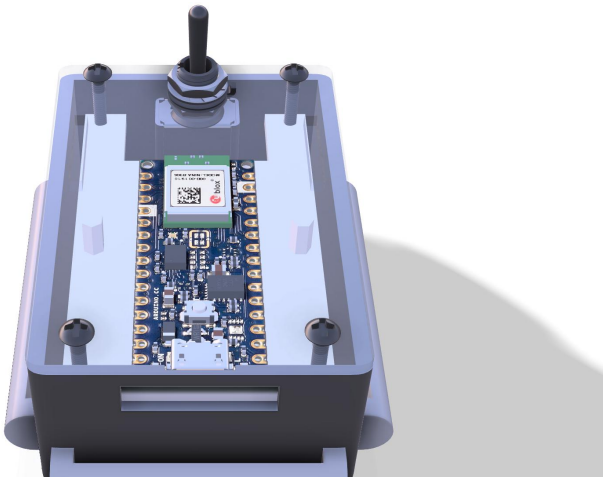

- **Cleaning:** Clean the device with a dry cloth. Avoid exposure to moisture and extreme heat.

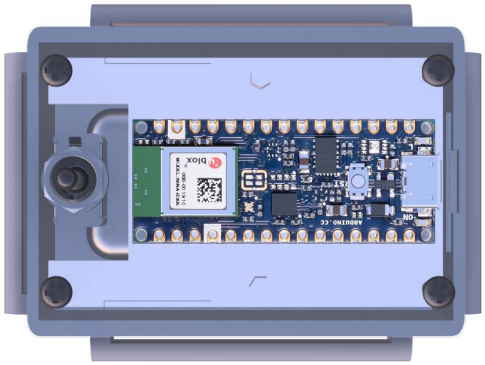

- **Monthly Check:** Once per month, check that the cover is securely fastened with no visible gaps. Ensure it is seated tightly. Gently tighten if any looseness is detected (refer to the picture for guidance).

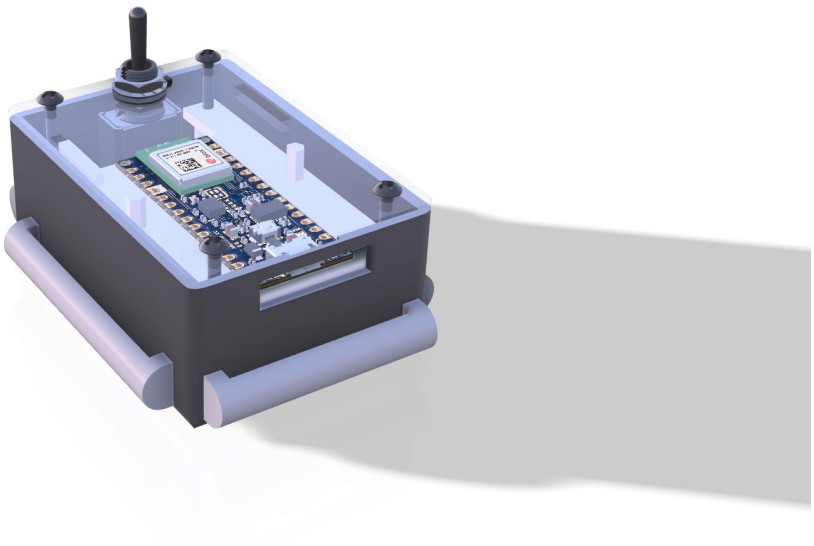

8.1 How to Replace the Battery

1. **Switch Off the Device:** Ensure the device is off, and verify that no lights are illuminated on the board.

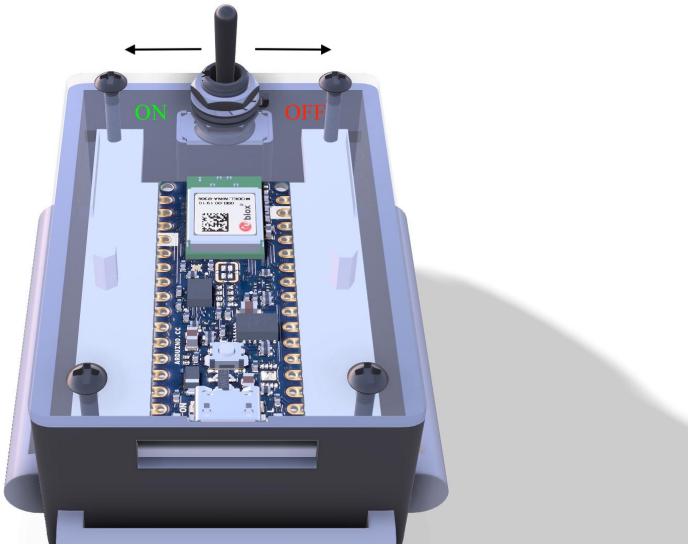

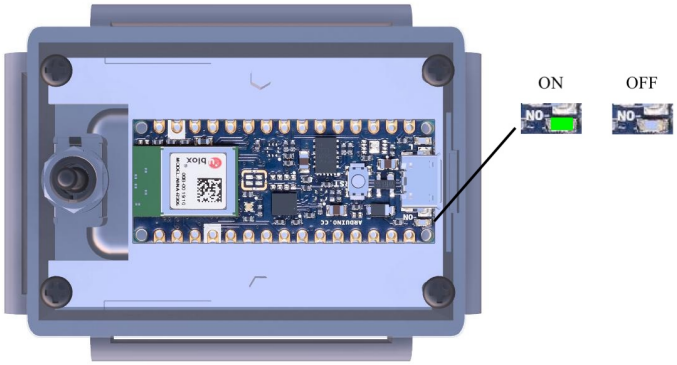

2. **Unscrew the Cover:** Remove the 4 screws and nuts holding the cover and body of the device.

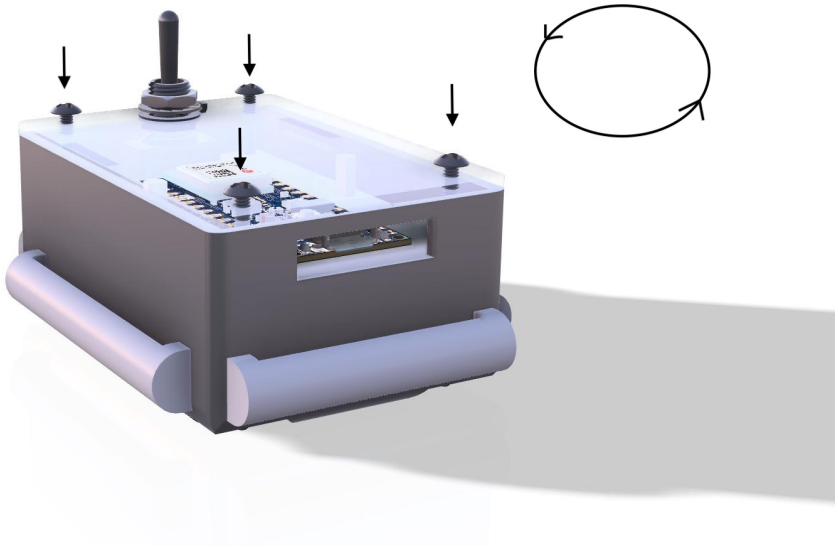

3. **Remove the Cover:** Carefully remove the cover with the applied button.

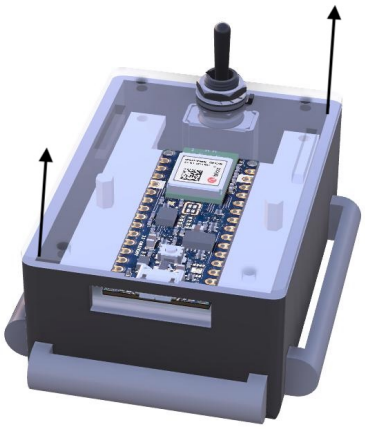

4. **Remove the Board:** Use the provided hand sticks to carefully lift the board out. Be cautious, as the battery wires are approximately 10 cm long.

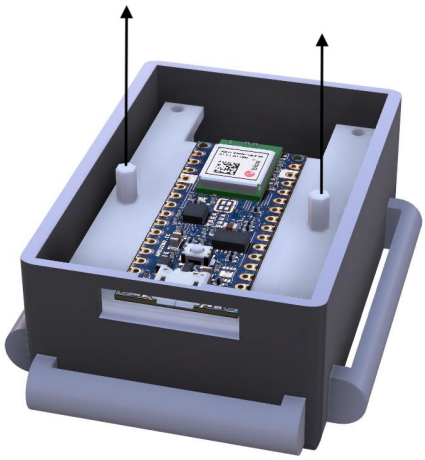

5. **Open the Battery Compartment:** Open the battery case and remove the old two batteries.

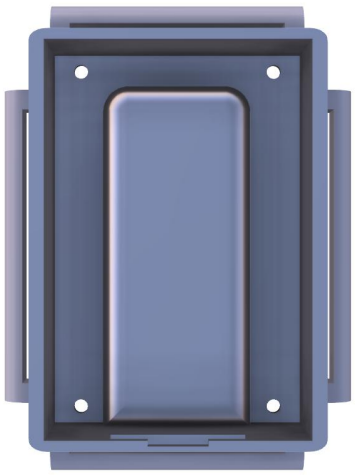

6. **Insert New Batteries:**
   - **Battery Closer to the Wire:** Insert with the plus (+) symbol facing up.
   - **Second Battery:** Insert with the minus (-) symbol facing up.
   - Follow the picture instructions for proper placement.

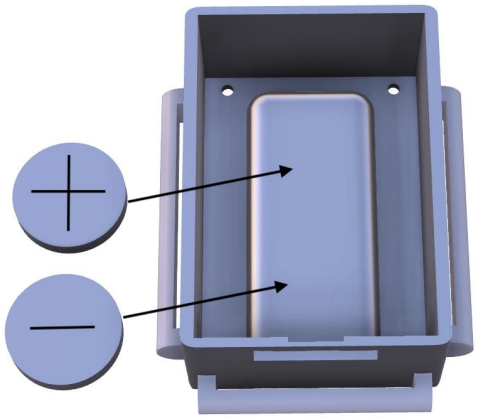

7. **Reposition the Board:** Place the board back in its original position as shown in the reference photo.

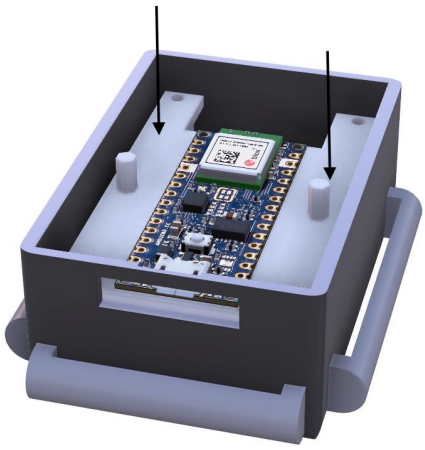

8. **Reattach the Cover:** Ensure the cover is correctly aligned, with the button on the opposite side of the USB port on the dashboard.

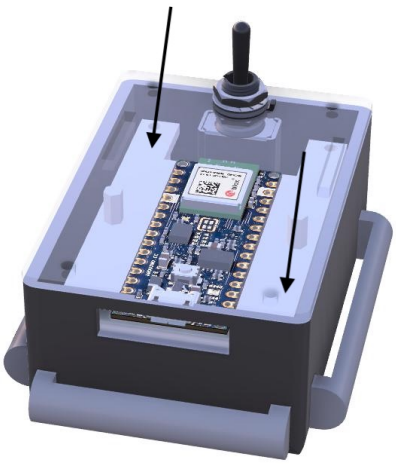

9. **Secure with Screws and Nuts:** Reinsert the 4 screws and secure them with the nuts.

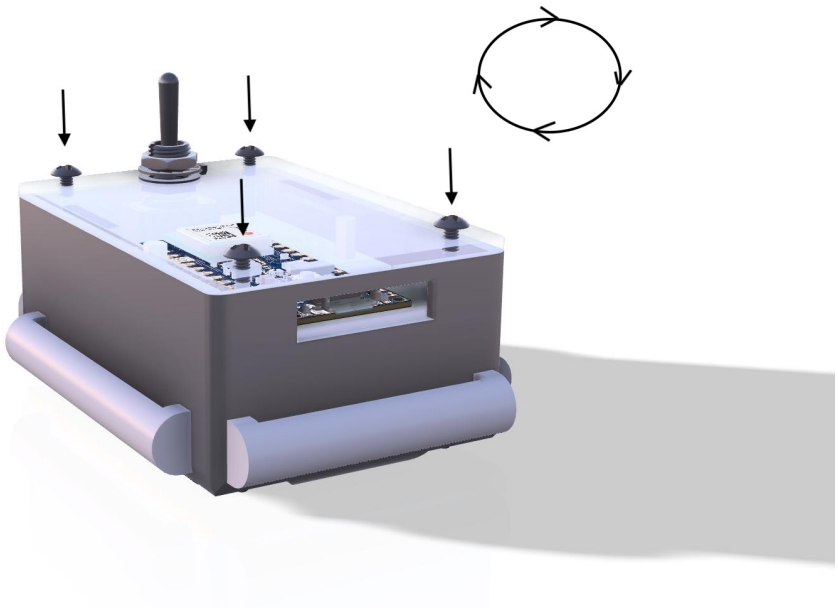

10. **Test the System:** Turn the device ON and verify that the green LED on the left side of the USB port is illuminated, indicating the device is powered and operational.

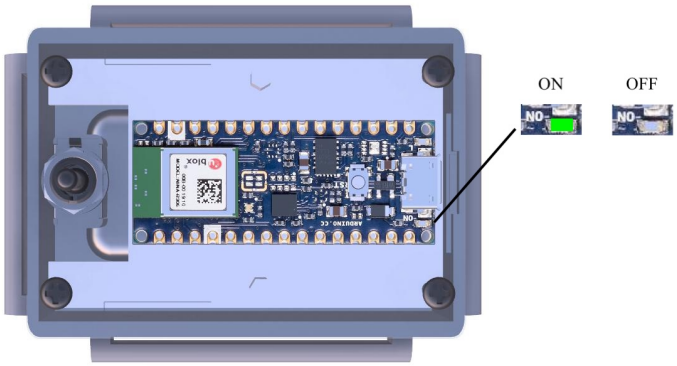

9 Troubleshooting

9.1 Device not working-no any indications

- **Check Power Switch:** Verify that the main switch is in the ON position and that the green LED next to the USB port is illuminated. If there is no green light, check for potential issues outlined below.

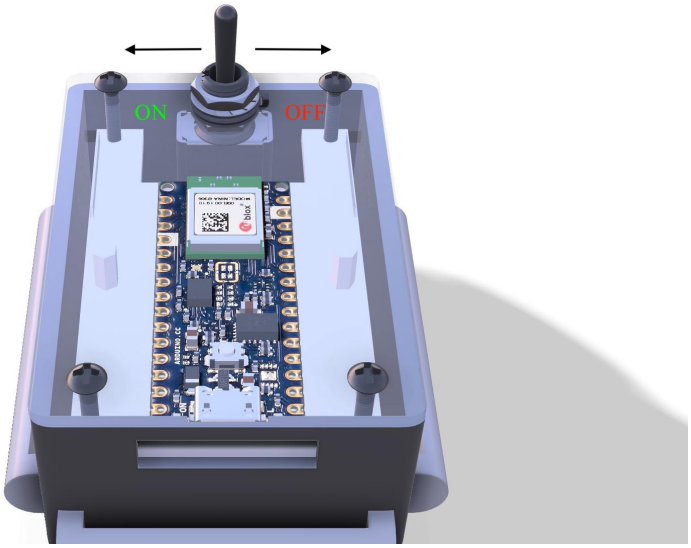

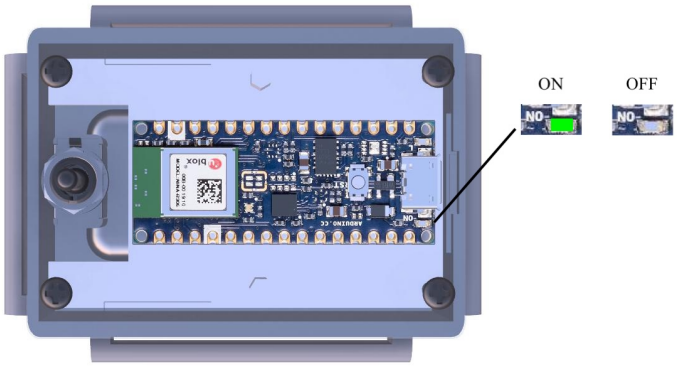

- **Main Pattern Status LED Not Indicating:** If the main status LED (indicating gait pattern) is not lighting up, ensure that:
  - Reset the device by switching it off, waiting 2 minutes, then switching it back on. If the problem persists, follow next point

- **Device Won't Power On:** Ensure the battery is inserted properly (as shown in Figure 7.1.6). If the problem persists, replace the battery according to maintenance guide -Repace battery.

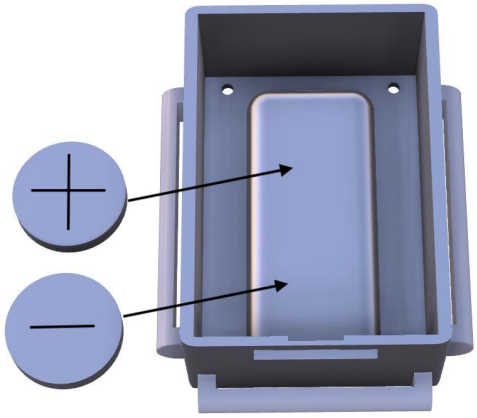

9.2 Abnormal Gait Detection Seems Inaccurate

- **Observe light during text :**.If the light is yellow -change battery,if the battery level ok ,but the liight indicaties data error (black indication) move to next point.

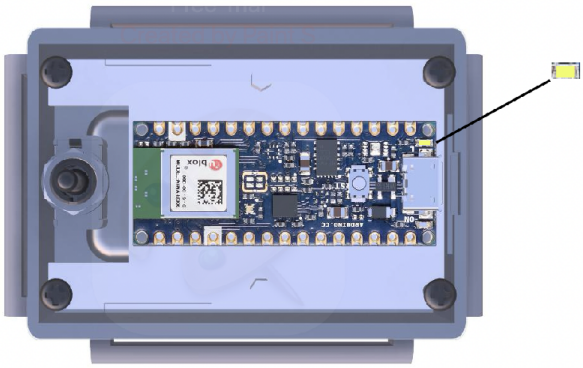

Free Trial

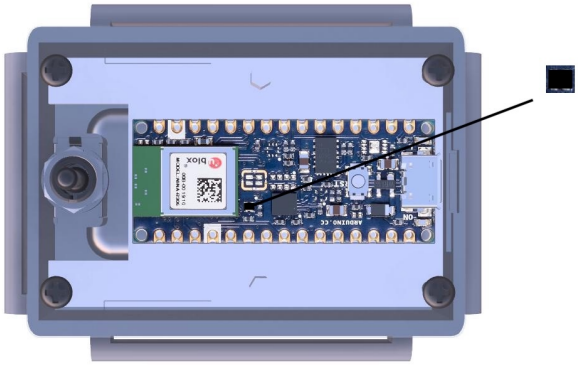

- **Check Device Attachment and Orientation:** 1 -Ensure the device is securely attached to your foot and positioned correctly. The strap should be snug but not overly tight, and the device should be oriented as described . 2 - Verify Walking Surface: Walk on a flat, even surface to allow the device to accurately monitor your gait pattern.

10 Specifications

- **Operating Voltage:** 3.3V
- **Power Consumption:**
  - 15mA in low-power mode
  - Up to 60mA in active mode
- **Operating Temperature Range:** -40°C to 85°C
- **Dimensions:** 45mm x 18mm
- **Weight:** 20 grams
- **Battery:** 2 x CR2032 (Replace every 4 months)
- **Sensors:**
  - 9-axis IMU (LSM9DS1) with Accelerometer, Gyroscope, Magnetometer
- **LED Indicators:**
  - Blinking Blue (Normal gait)
  - Blinking Red (Abnormal gait)
  - Constant Black (Data error)
  - Constant Orange (Low battery level)

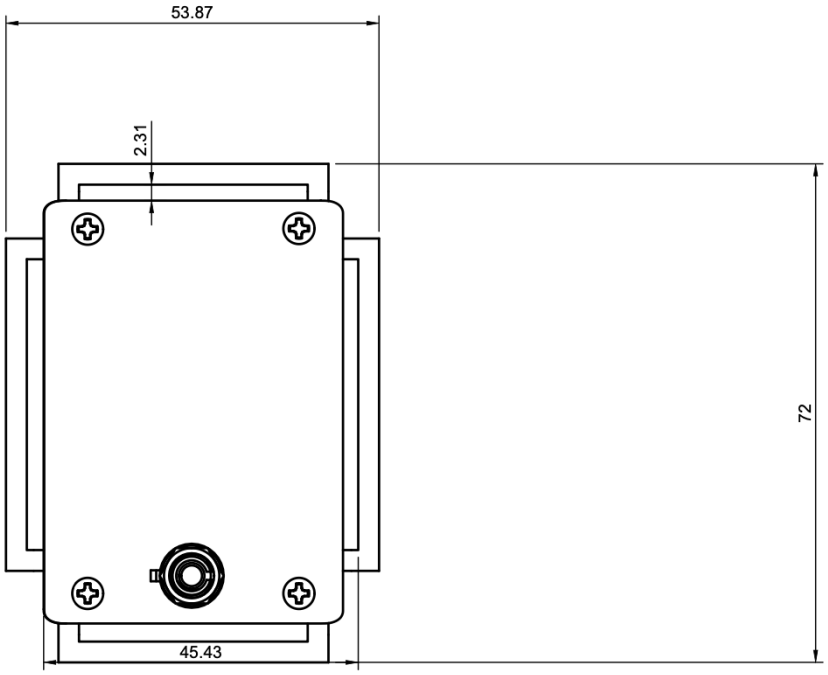

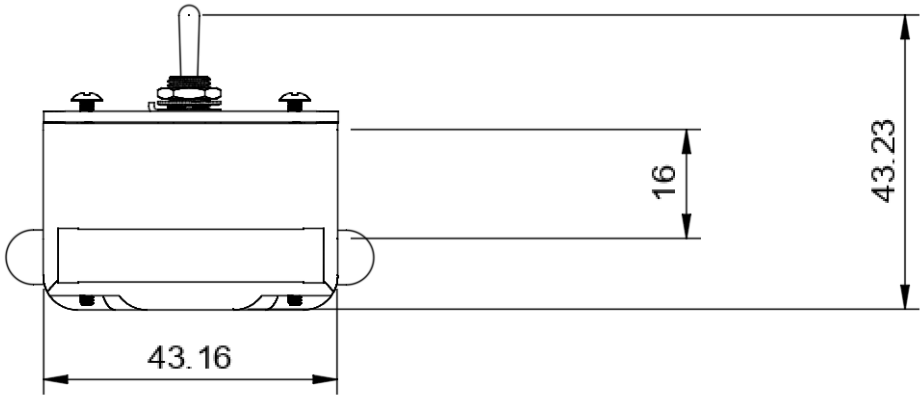
16
43.23
43.16

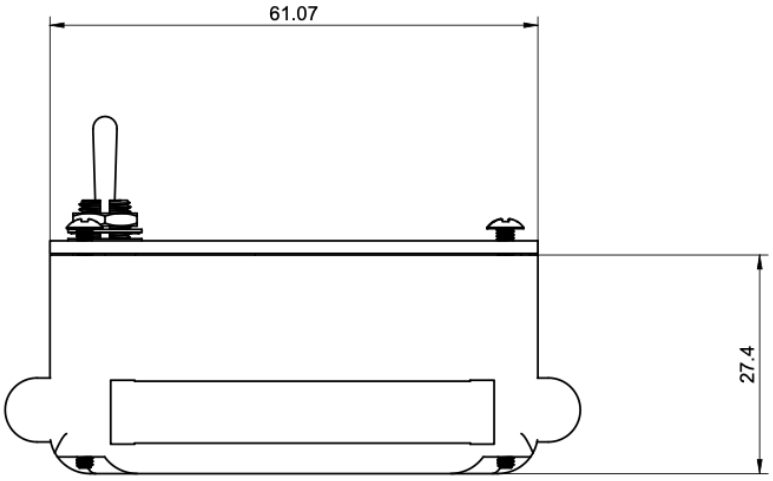
61.07
27.4