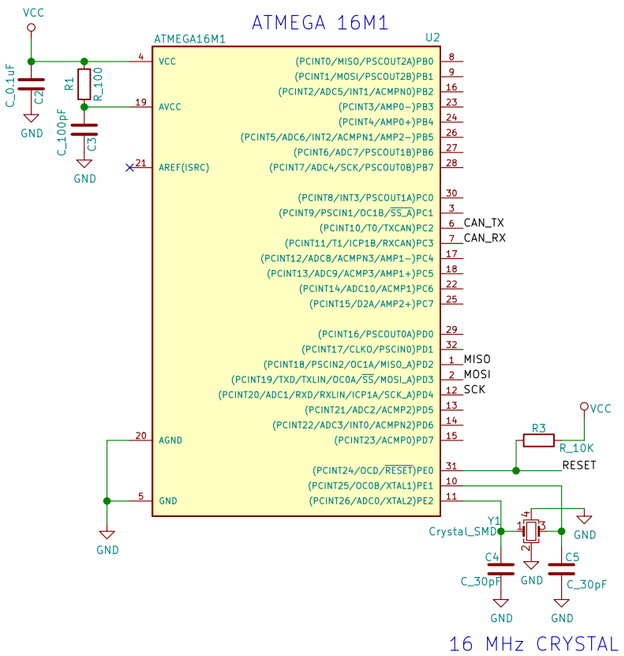

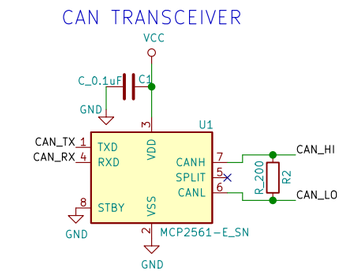

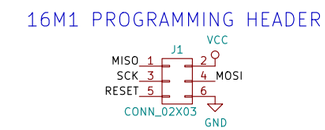

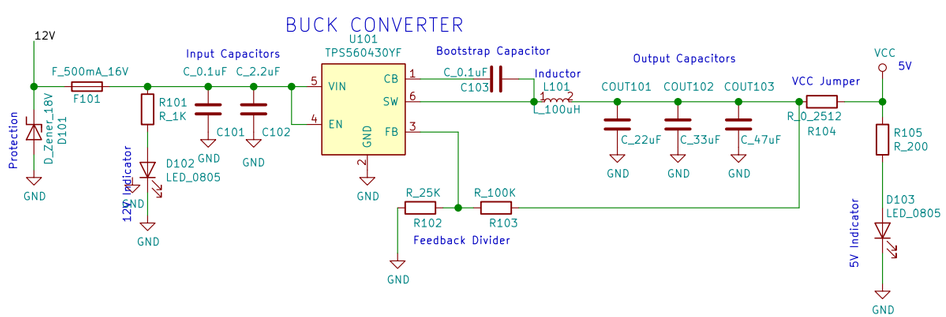

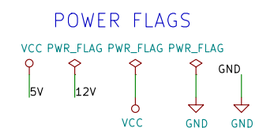

Wesley Soo-Hoo
Olin Electric Motorsports

Sheet: /
File: template.sch

Title: OEM Project Template

Size: B	Date: 2019-08-22	**Rev: 1**
KiCad E.D.A. kicad 5.1.6		Id: 1/1