BUCK CONVERTER

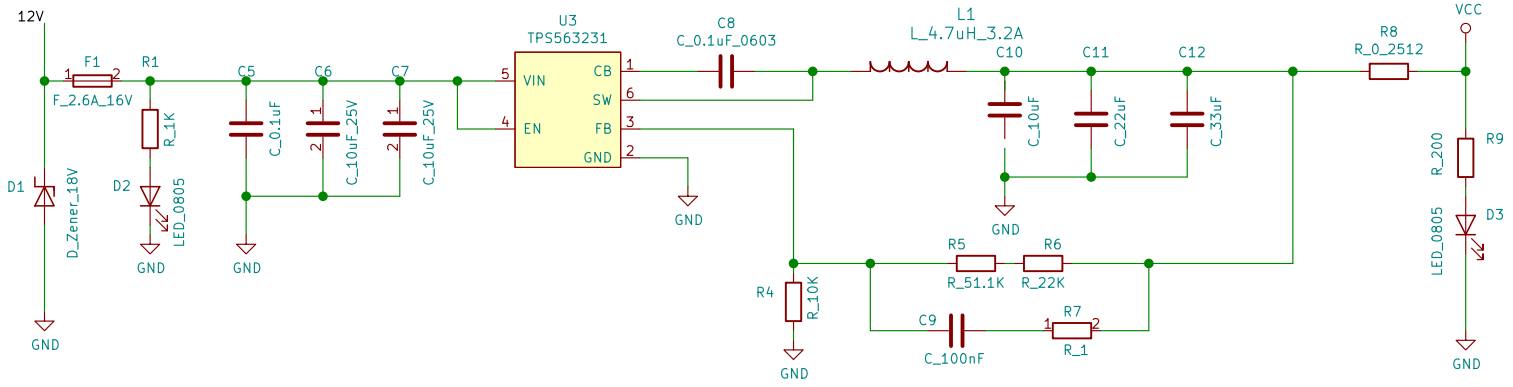

CAN CONTROLLER WITH INTEGRATED TRANSCEIVER

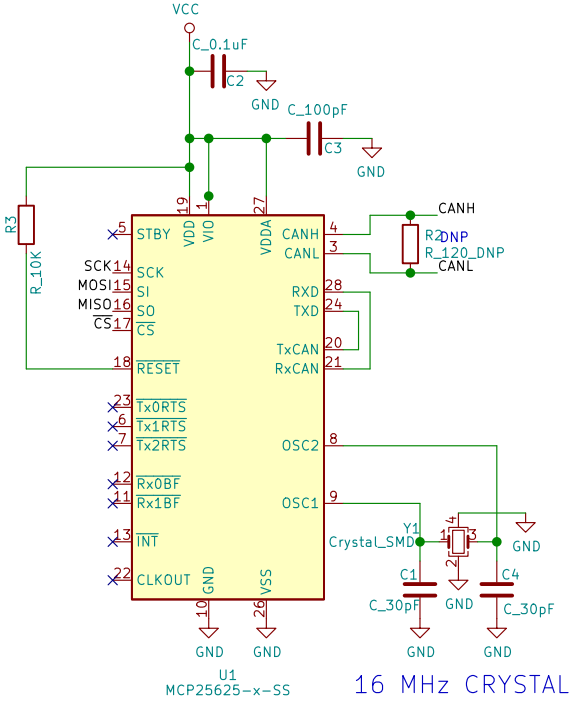

16 MHz CRYSTAL

RASPBERRY PI ZERO

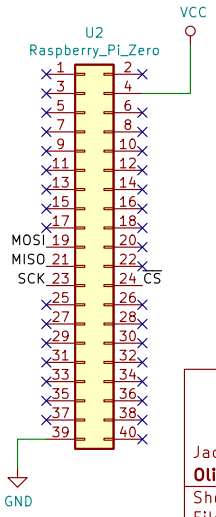

MICROFIT

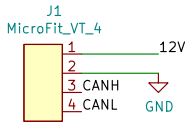

POWER FLAGS

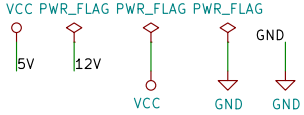

Jackie Zeng
Olin Electric Motorsports

Sheet: /
File: LCD_Screen.sch

Title: LCD Screen Board

Size: A4	Date: 2019-11-07	Rev: 1
KiCad E.D.A. kicad 5.1.6		Id: 1/1