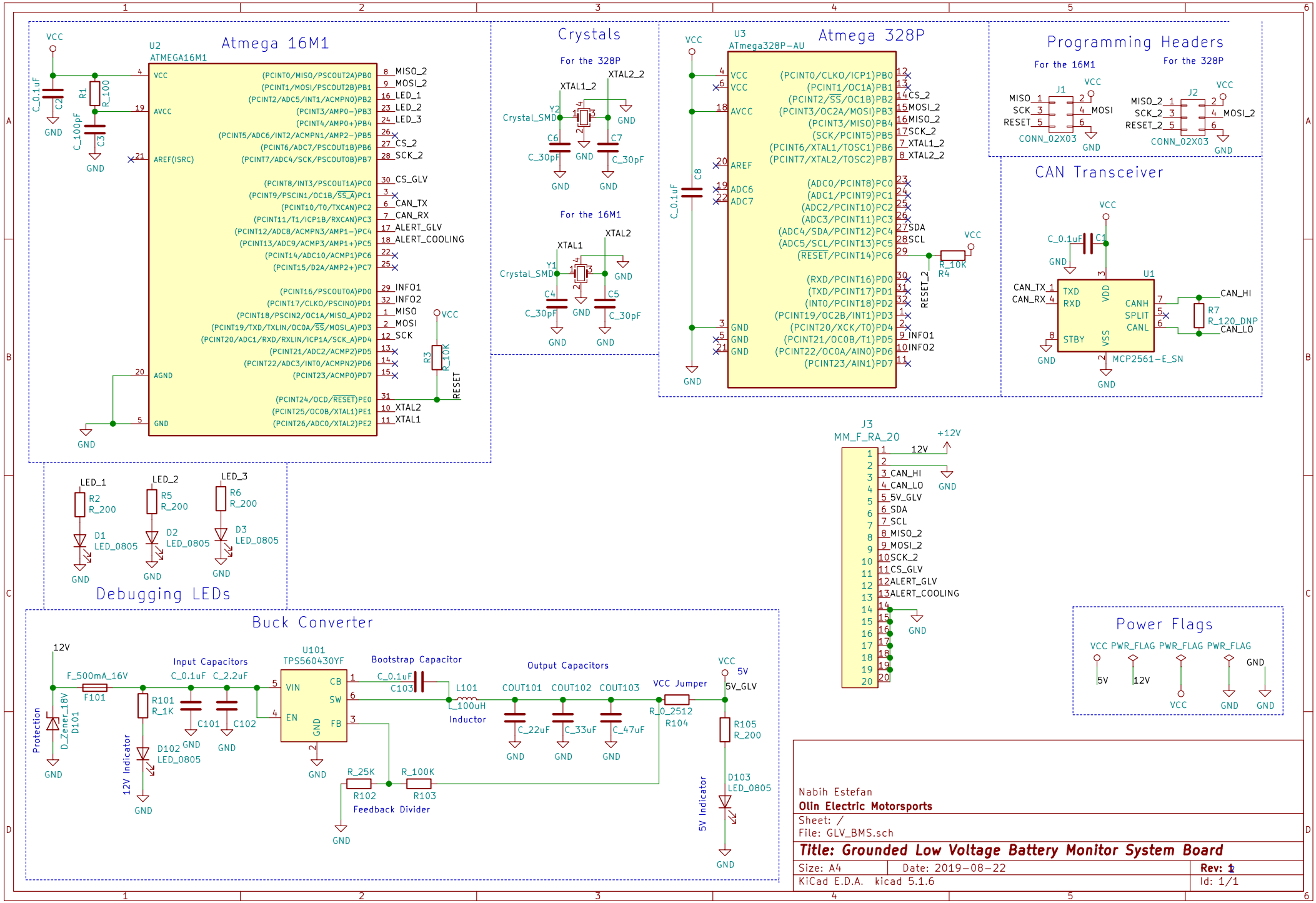
Atmega 16M1
U2
ATMEGA16M1
VCC
AVCC
AREF(ISRC)
AGND
GND
(PCINT0/MISO/PSCOUT2A)PB0
(PCINT1/MOSI/PSCOUT2B)PB1
(PCINT2/ADC5/INT1/ACMPN0)PB2
(PCINT3/AMP0-)PB3
(PCINT4/AMP0+)PB4
(PCINT5/ADC6/INT2/ACMPN1/AMP2-)PB5
(PCINT6/ADC7/PSCOUT1B)PB6
(PCINT7/ADC4/SCK/PSCOUT0B)PB7
(PCINT8/INT3/PSCOUT1A)PC0
(PCINT9/PSCIN1/OC1B/SS_A)PC1
(PCINT10/T0/TXCAN)PC2
(PCINT11/T1/ICP1B/RXCAN)PC3
(PCINT12/ADC8/ACMPN3/AMP1-)PC4
(PCINT13/ADC9/ACMP3/AMP1+)PC5
(PCINT14/ADC10/ACMP1)PC6
(PCINT15/D2A/AMP2+)PC7
(PCINT16/PSCOUT0A)PD0
(PCINT17/CLKO/PSCIN0)PD1
(PCINT18/PSCIN2/OC1A/MISO_A)PD2
(PCINT19/TXD/TXLIN/OC0A/SS/MOSI_A)PD3
(PCINT20/ADC1/RXD/RXLIN/ICP1A/SCK_A)PD4
(PCINT21/ADC2/ACMP2)PD5
(PCINT22/ADC3/INT0/ACMPN2)PD6
(PCINT23/ACMP0)PD7
(PCINT24/OCD/RESET)PE0
(PCINT25/OC0B/XTAL1)PE1
(PCINT26/ADC0/XTAL2)PE2
MISO_2
MOSI_2
LED_1
LED_2
LED_3
CS_2
SCK_2
CS_GLV
CAN_TX
CAN_RX
ALERT_GLV
ALERT_COOLING
INFO1
INFO2
MISO
MOSI
SCK
XTAL2
XTAL1
RESET
C_0.1uF
C2
R1
R_100
C_100pF
C3
R3
R_10K
Crystals
For the 328P
XTAL1_2
XTAL2_2
Y2
Crystal_SMD
C6
C7
C_30pF
For the 16M1
XTAL1
XTAL2
Y1
C4
C5
Atmega 328P
U3
ATmega328P-AU
(PCINT0/CLKO/ICP1)PB0
(PCINT1/OC1A)PB1
(PCINT2/SS/OC1B)PB2
(PCINT3/OC2A/MOSI)PB3
(PCINT3/MISO)PB4
(SCK/PCINT5)PB5
(PCINT6/XTAL1/TOSC1)PB6
(PCINT7/XTAL2/TOSC2)PB7
(ADC0/PCINT8)PC0
(ADC1/PCINT9)PC1
(ADC2/PCINT10)PC2
(ADC3/PCINT11)PC3
(ADC4/SDA/PCINT12)PC4
(ADC5/SCL/PCINT13)PC5
(RESET/PCINT14)PC6
(RXD/PCINT16)PD0
(TXD/PCINT17)PD1
(INT0/PCINT18)PD2
(PCINT19/OC2B/INT1)PD3
(PCINT20/XCK/T0)PD4
(PCINT21/OC0B/T1)PD5
(PCINT22/OC0A/AIN0)PD6
(PCINT23/AIN1)PD7
CS_2
MOSI_2
MISO_2
SCK_2
XTAL1_2
XTAL2_2
SDA
SCL
INFO1
INFO2
RESET_2
R_10K
R4
C8
Programming Headers
For the 16M1
For the 328P
J1
J2
MISO
SCK
RESET
MOSI
CONN_02X03
CAN Transceiver
U1
MCP2561-E_SN
CAN_TX
CAN_RX
TXD
RXD
VDD
VSS
STBY
CANH
SPLIT
CANL
CAN_HI
CAN_LO
R7
R_120_DNP
C1
J3
MM_F_RA_20
+12V
12V
5V_GLV
ALERT_GLV
ALERT_COOLING
Debugging LEDs
LED_1
LED_2
LED_3
R2
R_200
R5
R6
D1
D2
D3
LED_0805
Buck Converter
12V
F_500mA_16V
F101
Protection
D_Zener_18V
D101
Input Capacitors
C_0.1uF
C_2.2uF
C101
C102
R101
R_1K
12V Indicator
D102
U101
TPS560430YF
VIN
EN
CB
SW
FB
Bootstrap Capacitor
C103
L101
L_100uH
Inductor
Output Capacitors
COUT101
COUT102
COUT103
C_22uF
C_33uF
C_47uF
VCC Jumper
R_0_2512
R104
5V
5V_GLV
R105
R_200
D103
5V Indicator
R_25K
R_100K
R102
R103
Feedback Divider
Power Flags
PWR_FLAG
Nabih Estefan
Olin Electric Motorsports
Sheet: /
File: GLV_BMS.sch
Title: Grounded Low Voltage Battery Monitor System Board
Size: A4
Date: 2019-08-22
Rev: 1
KiCad E.D.A. kicad 5.1.6
Id: 1/1