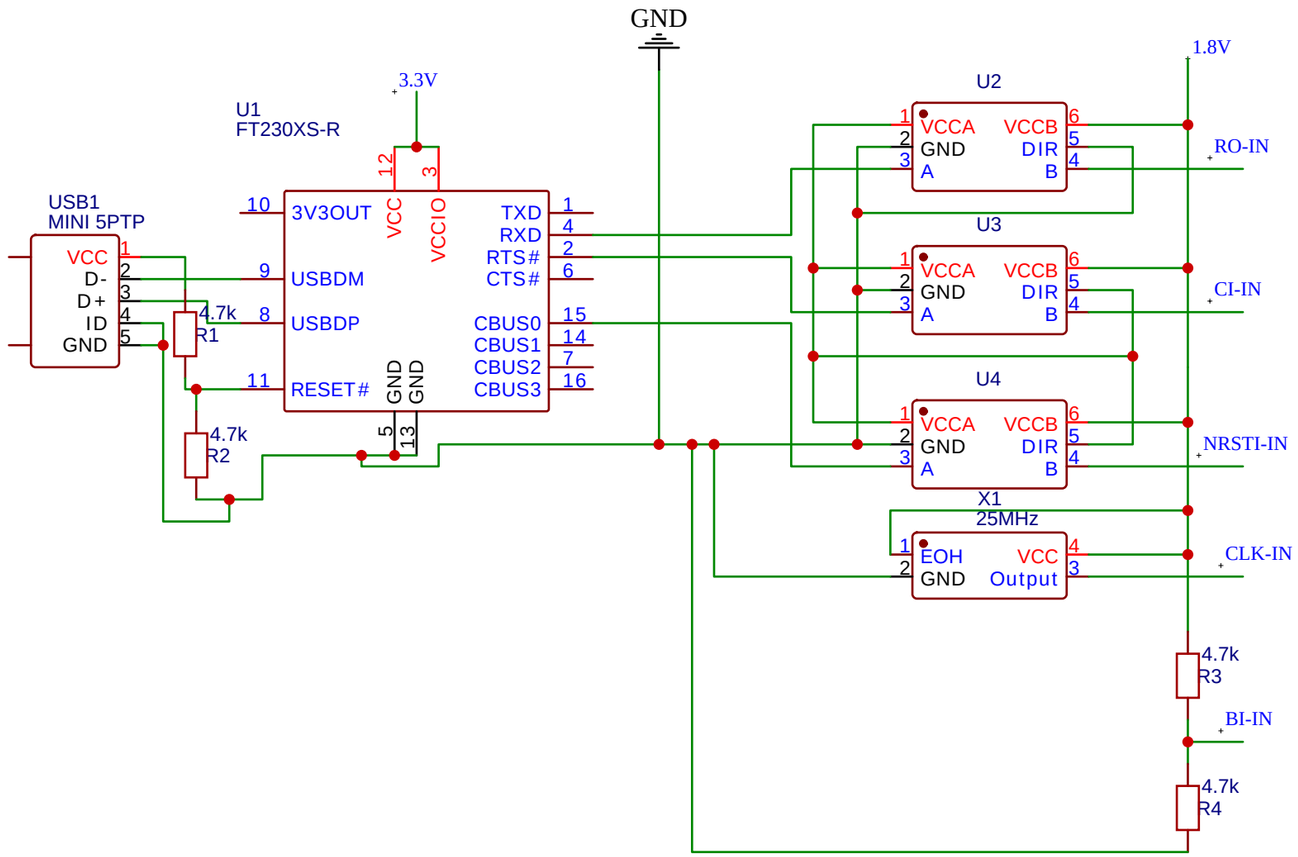

TITLE: BM1397 USB-MINI Comunication		REV: 1.0
嘉立创EDA	Company: Abonion1500	Sheet: 1/1
	Date: 2023-04-20 Drawn By: abonion1500	