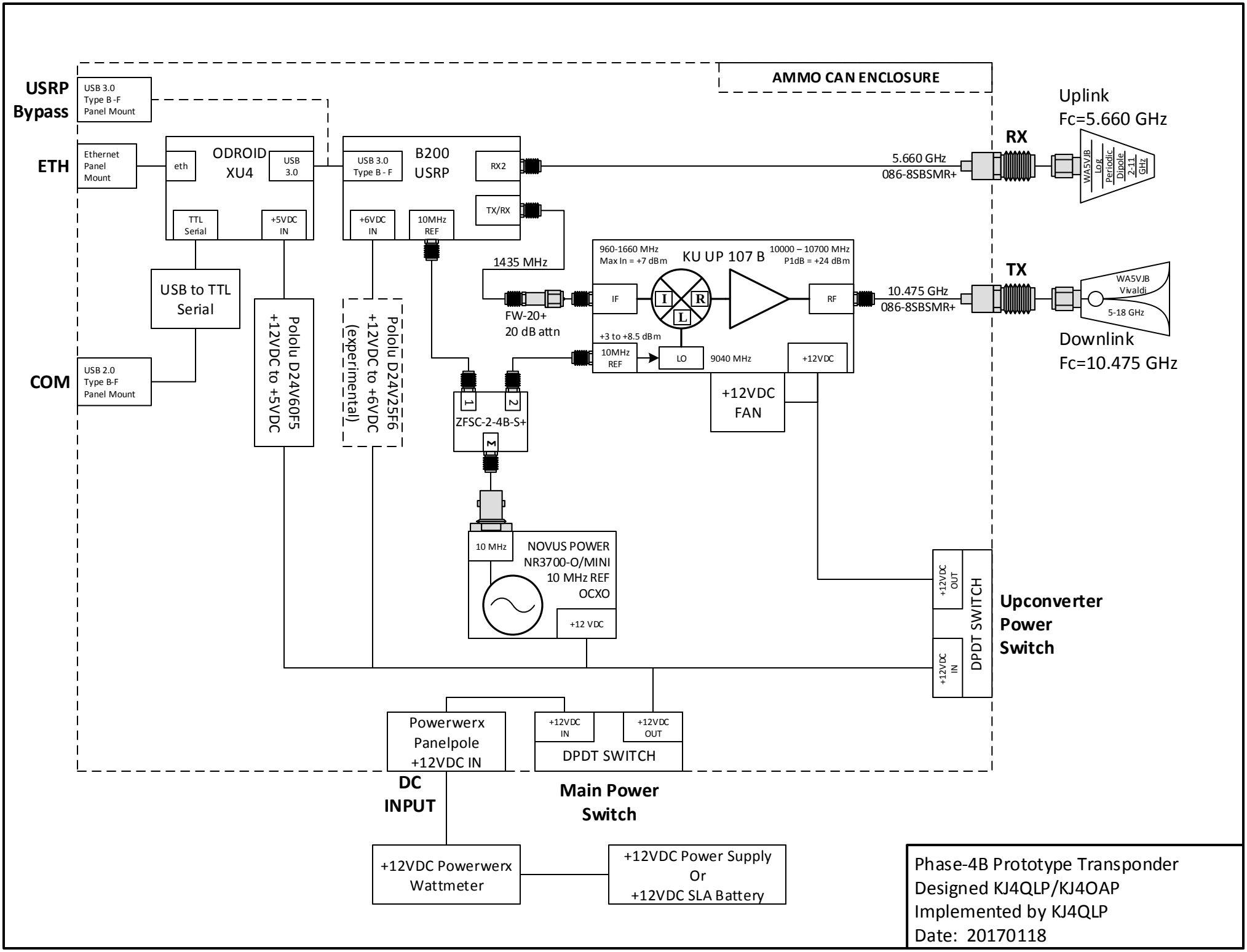

Phase-4B Prototype Transponder
Designed KJ4QLP/KJ4OAP
Implemented by KJ4QLP
Date: 20170118