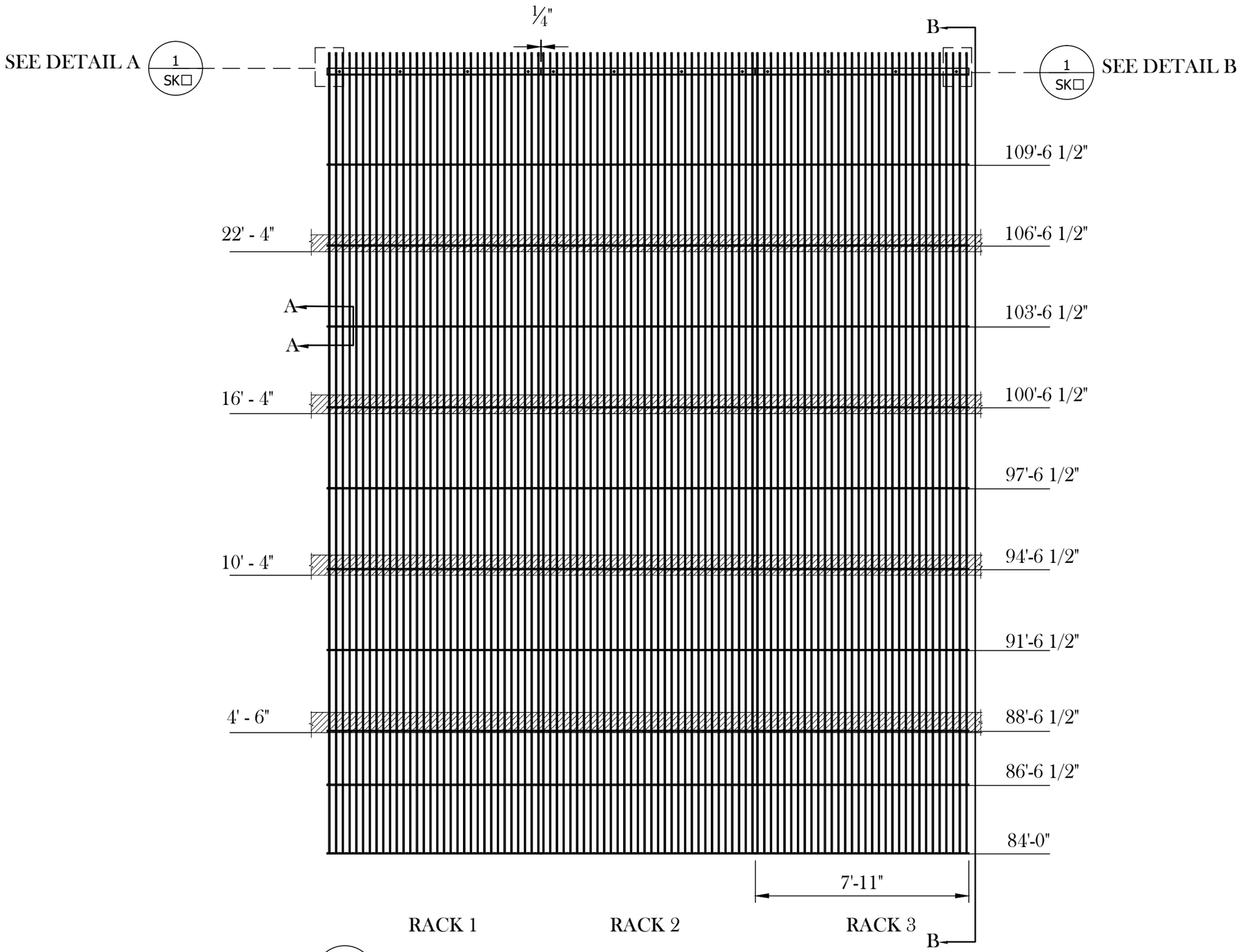

1 SK1 **ELEVATION**

SCALE: 1/4" = 1'-0"

REV:	ZONE:	REVISION NOTES:	REVISIONS

DESIGNED BY: DAVID MROWIEC

DRAWN BY: BRIAN COLLETTE

REVIEW BY: KURT FEAIRHELLER

APPROVED BY:

SIGN & DATE:

CROFTON CONSTRUCTION SERVICES, INC.
Construction - Diving - Technical Services
16 Harper Avenue
Portsmouth, Virginia 23707
Tele (757) 397-1131
Fax (757) 397-8693
www.croftondiving.com

CUSTOMER:

DOMINION POWER

PROJECT TITLE:

CUSHAW DAM
TRASH RACKS

ELEVATION

JOB NO: 14-8303

CONTRACT NO: N/A

SCALE: AS NOTED

REV:

DWG SIZE: B

DATE: 3/11/15

SHEET: SK1

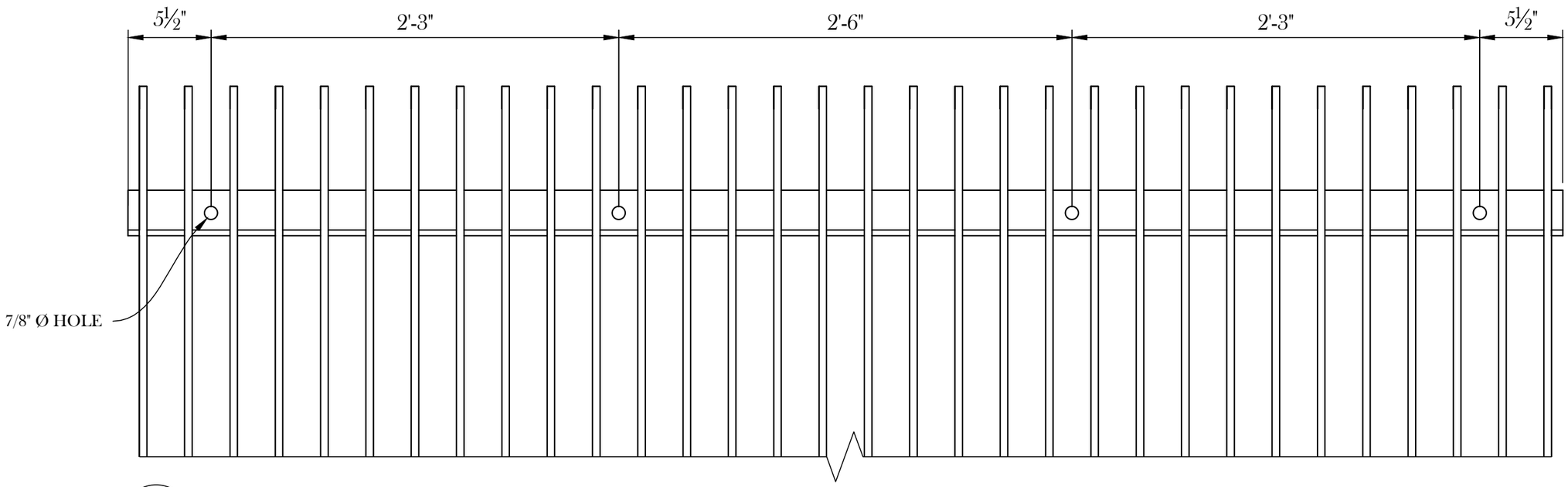

1 / SK2 **DETAIL B**

SCALE: 1-1/2" = 1'-0"

REV:	ZONE:	REVISION NOTES:	REVISIONS

DESIGNED BY: DAVID MROWIEC

DRAWN BY: BRIAN COLLETTE

REVIEW BY: KURT FEAIRHELLER

APPROVED BY:

SIGN & DATE:

CROFTON CONSTRUCTION SERVICES, INC.

Construction - Diving - Technical Services
16 Harper Avenue
Portsmouth, Virginia 23707
Tele (757) 397-1131
Fax (757) 397-8693
www.croftondiving.com

CUSTOMER:

DOMINION POWER

PROJECT TITLE:

CUSHAW DAM
TRASH RACKS

ELEVATION

JOB NO: 14-8303

CONTRACT NO: N/A

SCALE: AS NOTED

REV:

DWG SIZE: B

DATE: 3/11/15

SHEET: SK2

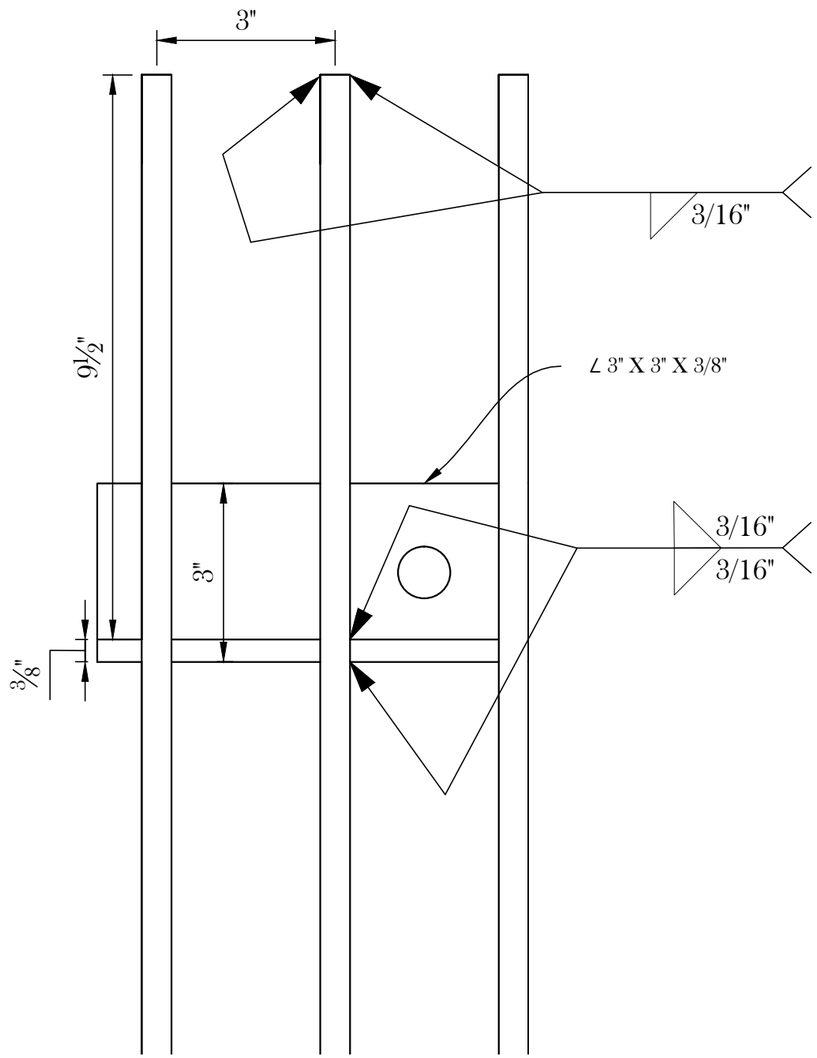

1 SK3 **DETAIL A**
SCALE: 1/4" = 1'-0"

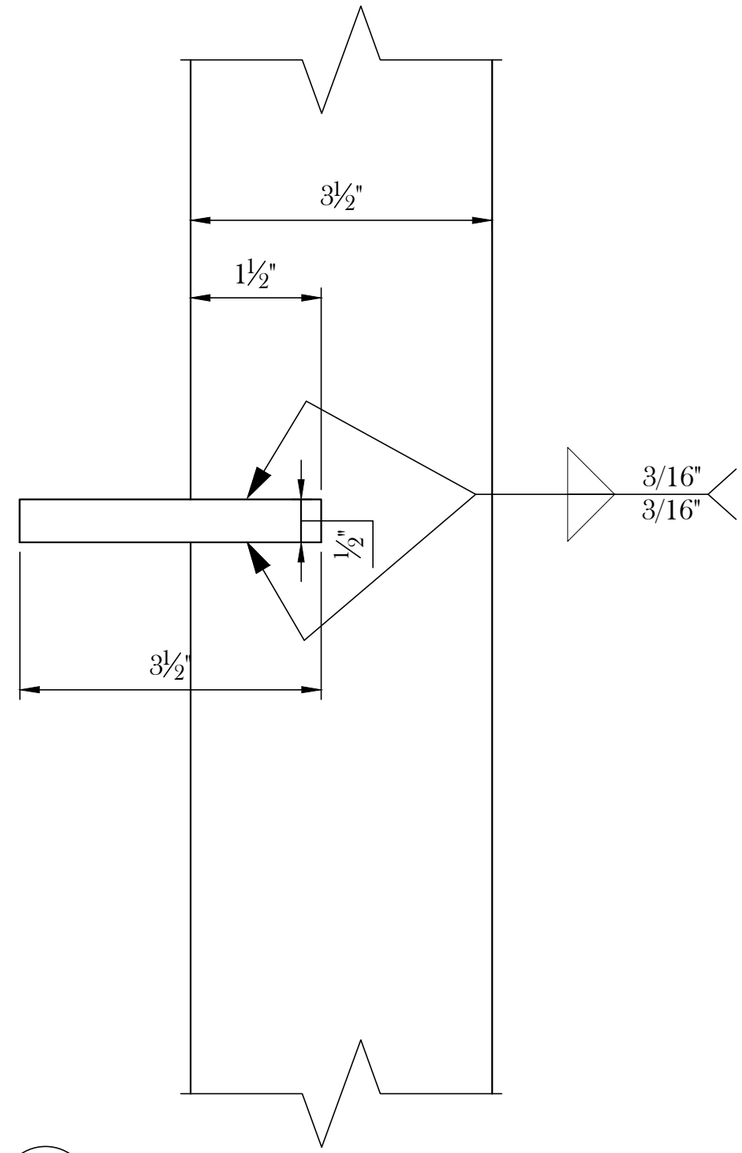

1 SK3 **SECTION A-A**
SCALE: 1/4" = 1'-0"

REV:	ZONE:	REVISION NOTES:	REVISIONS

DESIGNED BY: DAVID MROWIEC
DRAWN BY: BRIAN COLLETTE
REVIEW BY: KURT FEAIRHELLER
APPROVED BY:
SIGN & DATE:

CROFTON CONSTRUCTION SERVICES, INC.
Construction - Diving - Technical Services
16 Harper Avenue
Portsmouth, Virginia 23707
Tele (757) 397-1131
Fax (757) 397-8693
www.croftondiving.com

CUSTOMER:
DOMINION POWER

PROJECT TITLE:
CUSHAW DAM
TRASH RACKS

DETAIL, SECTION

JOB NO: 14-8303
CONTRACT NO: N/A
SCALE: AS NOTED
REV:
DWG SIZE: B
DATE: 3/11/15
SHEET: SK3

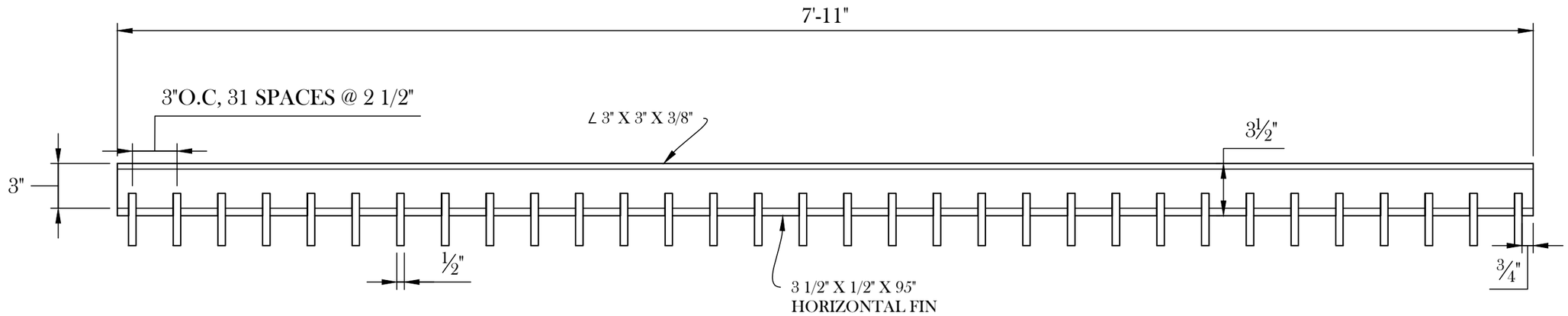

1 / SK4 **PLAN**

SCALE: 3"=1'-0"

REV:	ZONE:	REVISION NOTES:	REVISIONS

DESIGNED BY: DAVID MROWIEC

DRAWN BY: BRIAN COLLETTE

REVIEW BY: KURT FEAIRHELLER

APPROVED BY:

SIGN & DATE:

CROFTON CONSTRUCTION SERVICES, INC.

Construction - Diving - Technical Services
16 Harper Avenue
Portsmouth, Virginia 23707
Tele (757) 397-1131
Fax (757) 397-8693
www.croftondiving.com

CUSTOMER:

DOMINION POWER

PROJECT TITLE:

CUSHAW DAM
TRASH RACKS

PLAN

JOB NO: 14-8303

CONTRACT NO: N/A

SCALE: AS NOTED

REV:

DWG SIZE: B

DATE: 3/11/15

SHEET: SK4

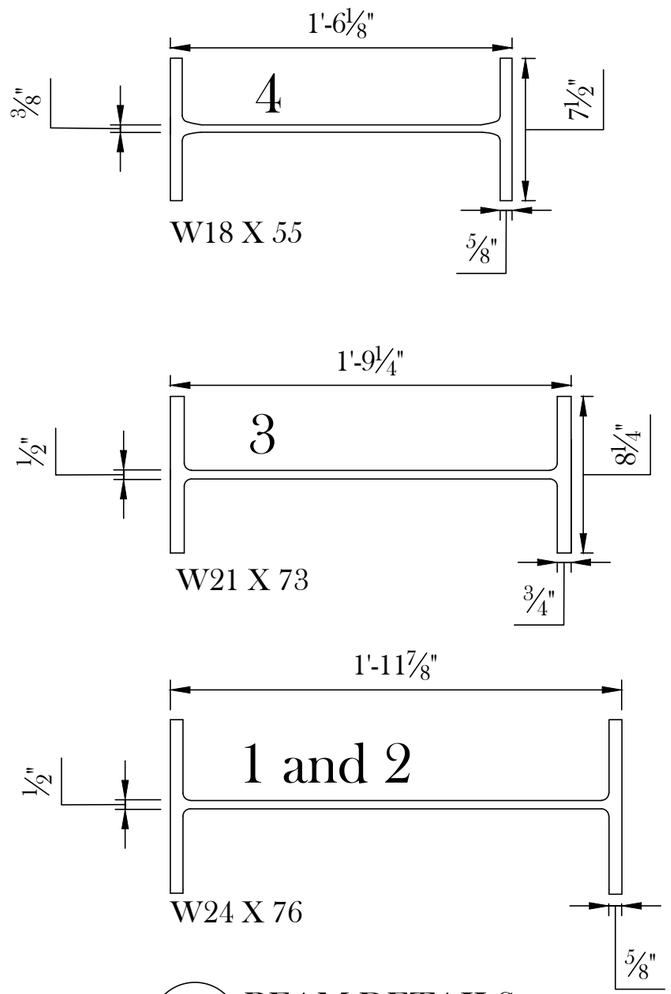

1 BEAM DETAILS
SK4 SCALE 1/4" = 1'

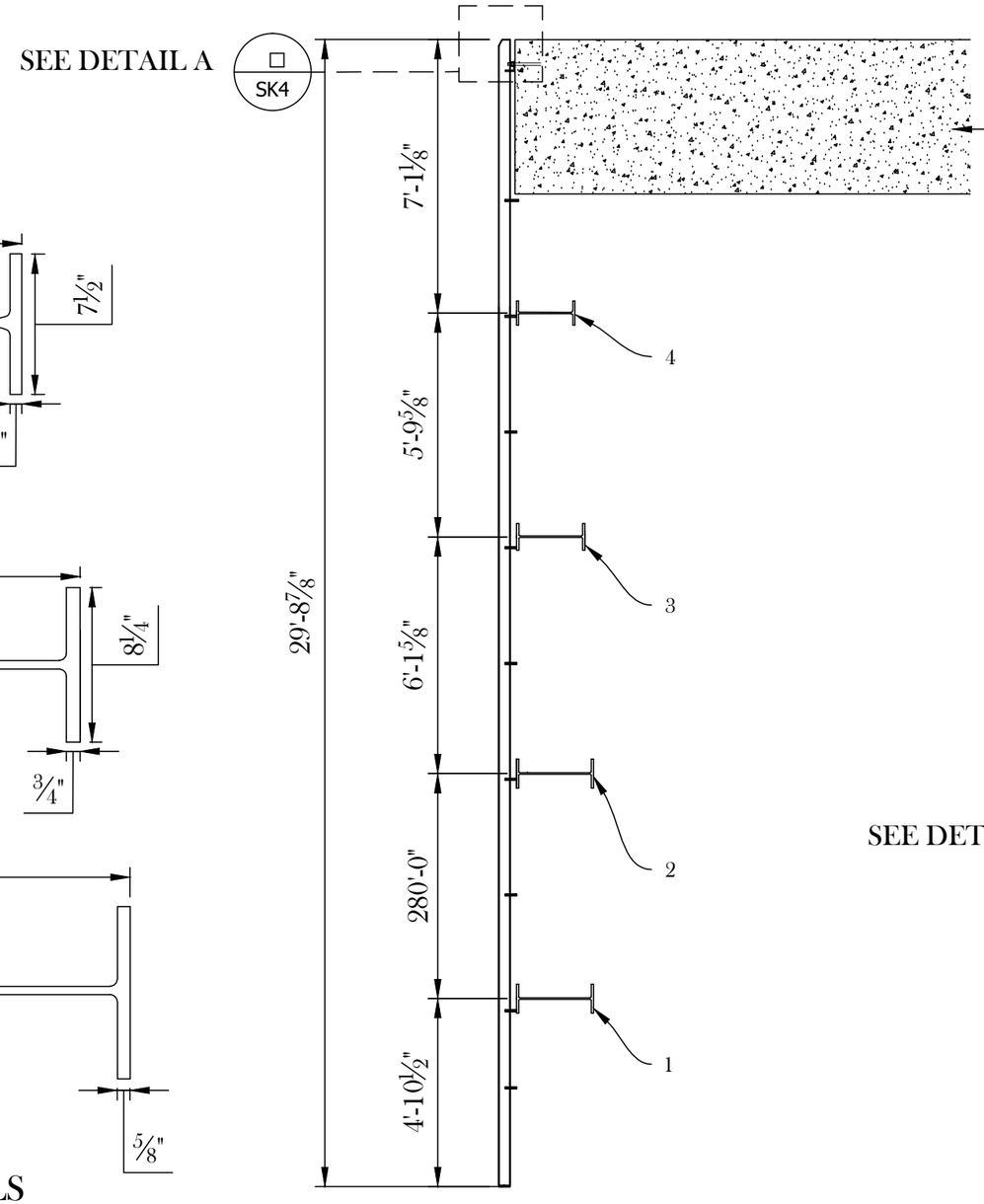

2 SECTION B-B
SK5 SCALE 1/4" = 1'

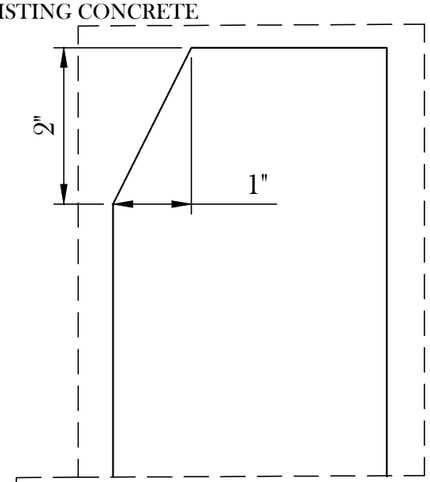

3 DETAIL B
SK4 SCALE 6"=1'

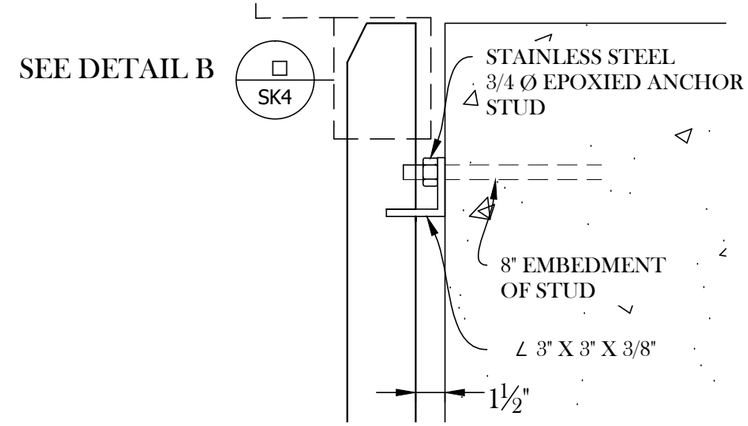

3 DETAIL A
SK5 SCALE 1/4" = 1'

REV:	ZONE:	REVISION NOTES:	REVISIONS

DESIGNED BY: DAVID MROWIEC
DRAWN BY: BRIAN COLLETTE
REVIEW BY: KURT FEAIRHELLER
APPROVED BY:
SIGN & DATE:

CROFTON CONSTRUCTION SERVICES, INC.
Construction - Diving - Technical Services
16 Harper Avenue
Portsmouth, Virginia 23707
Tele (757) 397-1131
Fax (757) 397-8693
www.croftondiving.com

CUSTOMER:
DOMINION POWER

PROJECT TITLE:
CUSHAW DAM
TRASH RACKS

SECTION, DETAILS

JOB NO: 14-8303

CONTRACT NO: N/A

SCALE: AS NOTED

REV:
DWG SIZE: B
DATE: 3/11/15

SHEET: SK5

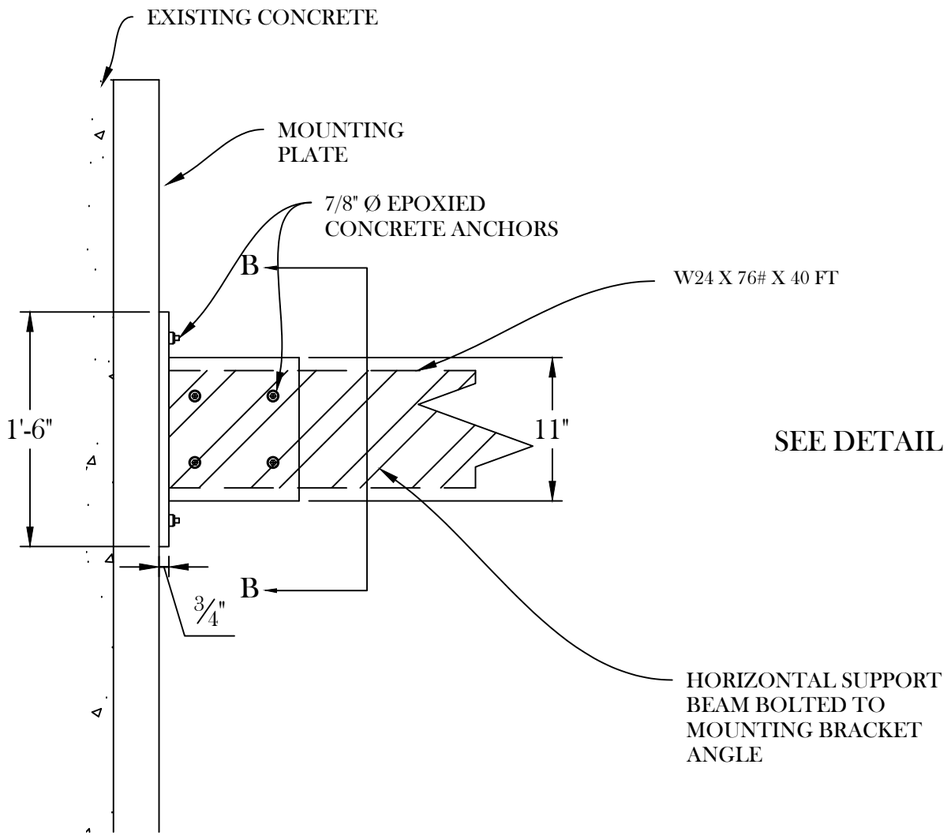

1 / SK4 UP STREAM VIEW

SCALE:1" = 1'- 0"

SEE DETAIL A 1 / SK4

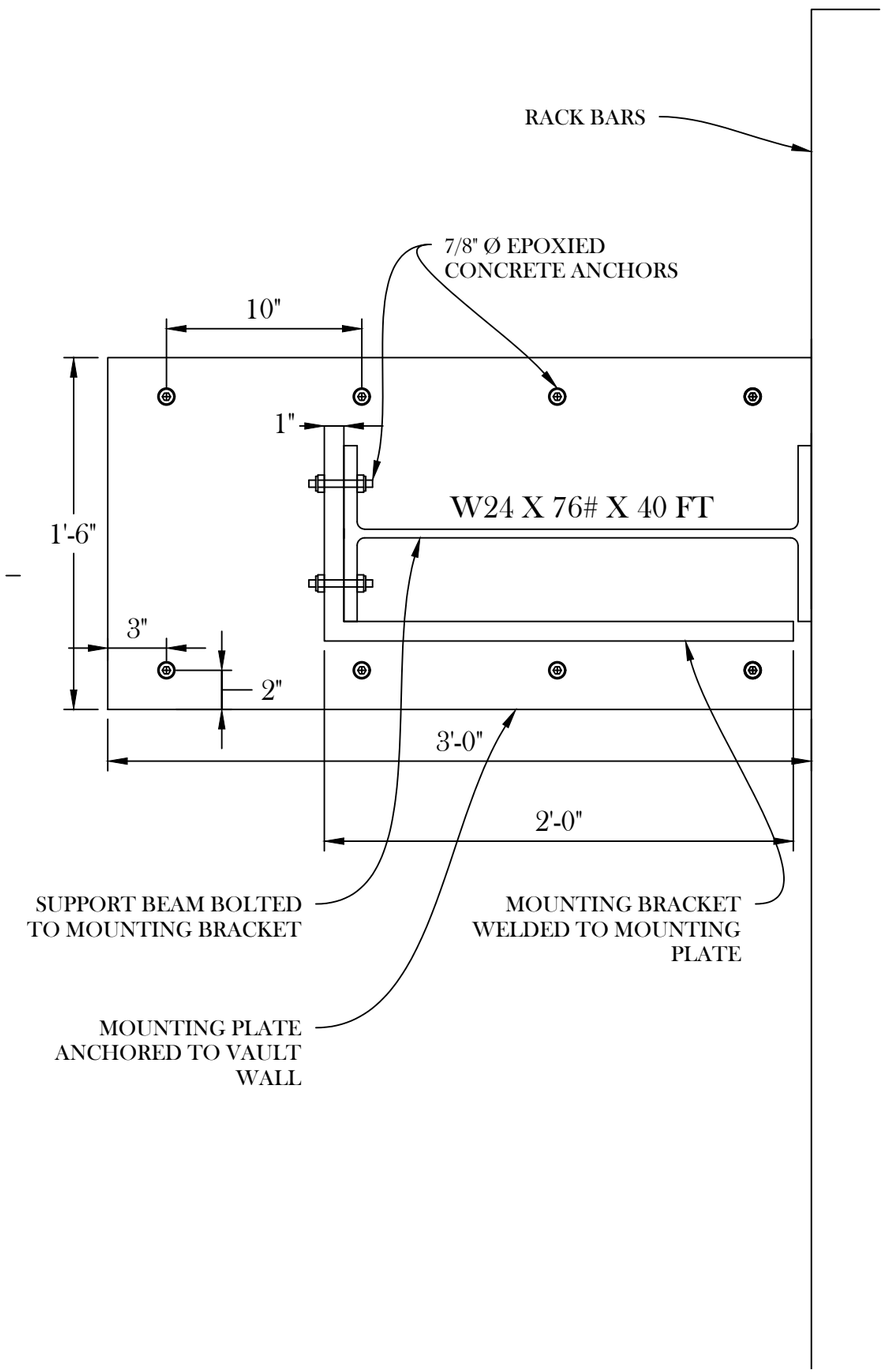

2 / SK4 SECTION B-B

SCALE: 1-1/2" = 1'

REV:	ZONE:	REVISION NOTES:	REVISIONS

DESIGNED BY: DAVID MROWIEC

DRAWN BY: BRIAN COLLETTE

REVIEW BY: KURT FEAIRHELLER

APPROVED BY:

SIGN & DATE:

C:\Users\Brian Collette\Desktop\xgfhnnxfnnfxghnn.JPG

Construction - Diving - Technical Services
16 Harper Avenue
Portsmouth, Virginia 23707
Tele (757) 397-1131
Fax (757) 397-8693
www.croftondiving.com

CUSTOMER:

DOMINION POWER

PROJECT TITLE:

CUSHAW DAM TRASH RACKS

SECTION, UPSTREAM VIEW

JOB NO: 14-8303

CONTRACT NO: N/A

SCALE: AS NOTED

REV:

DWG SIZE: B

DATE: 3/11/15

SHEET: SK6