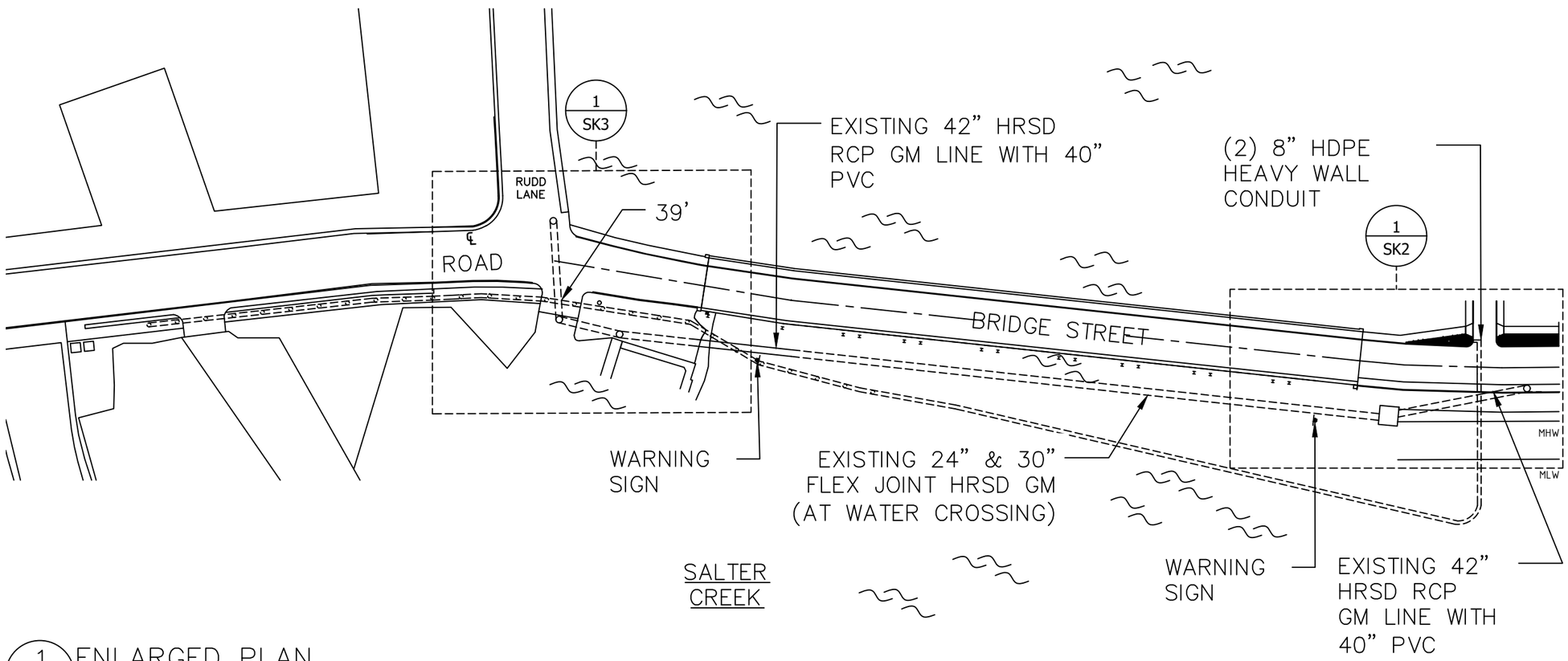

1 / SK1 ENLARGED PLAN

SCALE: 1/64" = 1'-0"

1.	4'
2.	8'
3.	14'
4.	18'
5.	22'
6.	26'
7.	30'
8.	33'

9.	35'
10.	36'
11.	36'
12.	37'
13.	36'
14.	37'
15.	37'
16.	37'

17.	37'
18.	33'
19.	32'
20.	31'
21.	27'
22.	24'
23.	19'
24.	14'

25.	8'
26.	4'
27.	0'

LEGEND

1. 4'	4. 18'	7. 30'	10. 36'	13. 36'	16. 37'
2. 8'	5. 22'	8. 33'	11. 36'	14. 37'	17. 37'
3. 14'	6. 26'	9. 35'	12. 37'	15. 37'	18. 33'
19. 32'	22. 24'	25. 8'			
20. 31'	23. 19'	26. 4'			
21. 27'	24. 14'	27. 0'			

*DRAWINGS ARE TO BE USED FOR PRESENTATION PURPOSES ONLY

N

REV:	ZONE:	REVISION NOTES:	REVISIONS
1		ADDED NOTES	ISSUE 06/12/15

DESIGNED BY: J.CROFTON
DRAWN BY: B.COLLETTE
REVIEW BY: J.CROFTON
APPROVED BY:
SIGN & DATE:

CROFTON INDUSTRIES, INC.
Construction – Diving – Technical Services
16 Harper Avenue
Portsmouth, Virginia 23707
Tele (757) 397-1131
Fax (757) 397-8693
www.croftondiving.com

CUSTOMER: DOMINION VIRGINIA POWER

PROJECT TITLE: PROPOSED BRIDGE STREET DISTRIBUTION CIRCUIT RELOCATION HAMPTON, VA.

OVER ALL PLAN

JOB NO: 14-8289

CONTRACT NO: N/A

SCALE: AS NOTED

REV:

DWG SIZE: B
DATE: 01/07/16

SHEET: SK1

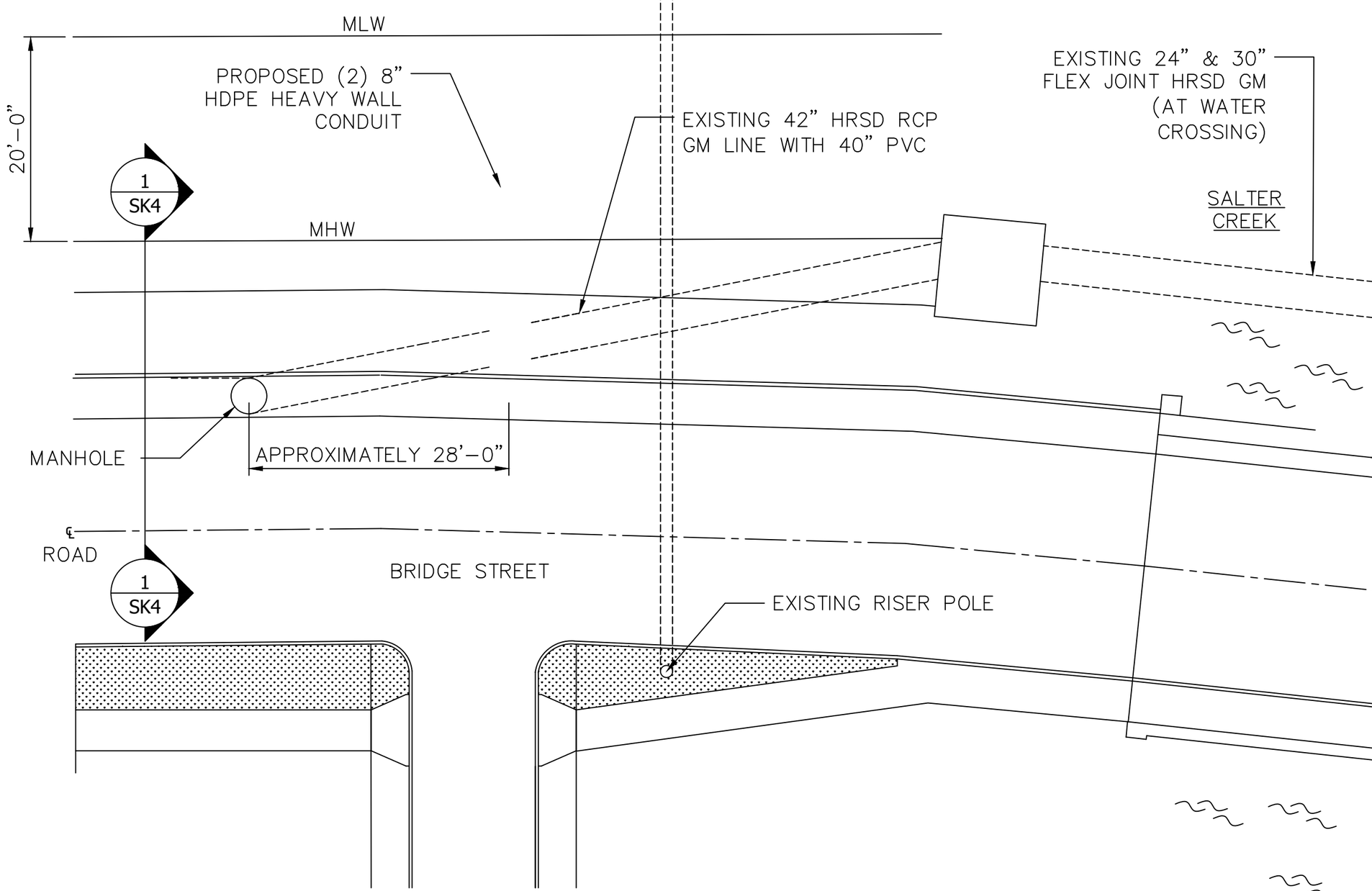

*DRAWINGS ARE TO BE USED FOR PRESENTATION PURPOSES ONLY

1 SK2 ENLARGED PLAN
SCALE: 3/32" = 1'-0"

REV:	ZONE:	REVISION NOTES:	REVISIONS
1		ADDED NOTES	ISSUE 06/12/15

DESIGNED BY: J.CROFTON
DRAWN BY: B.COLLETTE
REVIEW BY: J.CROFTON
APPROVED BY:
SIGN & DATE:

CROFTON INDUSTRIES, INC.
Construction – Diving – Technical Services
16 Harper Avenue
Portsmouth, Virginia 23707
Tele (757) 397-1131
Fax (757) 397-8693
www.croftondiving.com

CUSTOMER: DOMINION VIRGINIA POWER

PROJECT TITLE: PROPOSED BRIDGE STREET DISTRIBUTION CIRCUIT RELOCATION HAMPTON, VA.

ENLARGED PLAN

JOB NO: 14-8289

CONTRACT NO: N/A

SCALE: AS NOTED

REV:

DWG SIZE: B
DATE: 01/07/16

SHEET: SK2

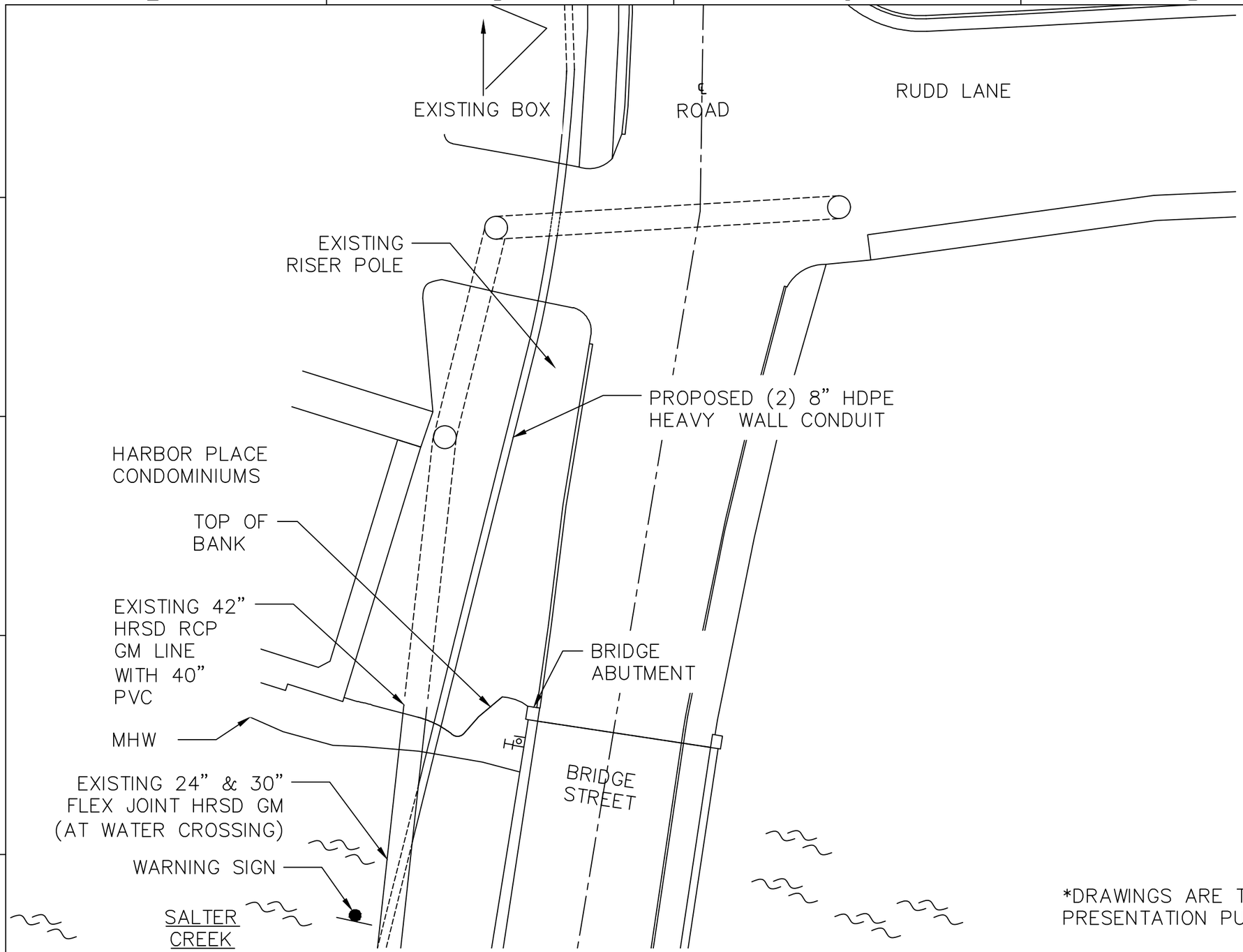

*DRAWINGS ARE TO BE USED FOR PRESENTATION PURPOSES ONLY

N

1 SK3 ENLARGED PLAN WITH NOTES ONLY
SCALE: 1/16"=1'-0"

REV:	ZONE:	REVISION NOTES:	REVISIONS
1		ADDED NOTES	ISSUE 06/12/15

DESIGNED BY: J.CROFTON
DRAWN BY: B.COLLETTE
REVIEW BY: J.CROFTON
APPROVED BY:
SIGN & DATE:

CROFTON INDUSTRIES, INC.
Construction – Diving – Technical Services
16 Harper Avenue
Portsmouth, Virginia 23707
Tele (757) 397-1131
Fax (757) 397-8693
www.croftondiving.com

CUSTOMER: DOMINION VIRGINIA POWER

PROJECT TITLE: PROPOSED BRIDGE STREET DISTRIBUTION CIRCUIT RELOCATION HAMPTON, VA.

ENLARGED PLAN WITH NOTES ONLY

JOB NO: 14-8289

CONTRACT NO: N/A

SCALE: AS NOTED

REV:

DWG SIZE: B
DATE: 01/07/16

SHEET: SK3

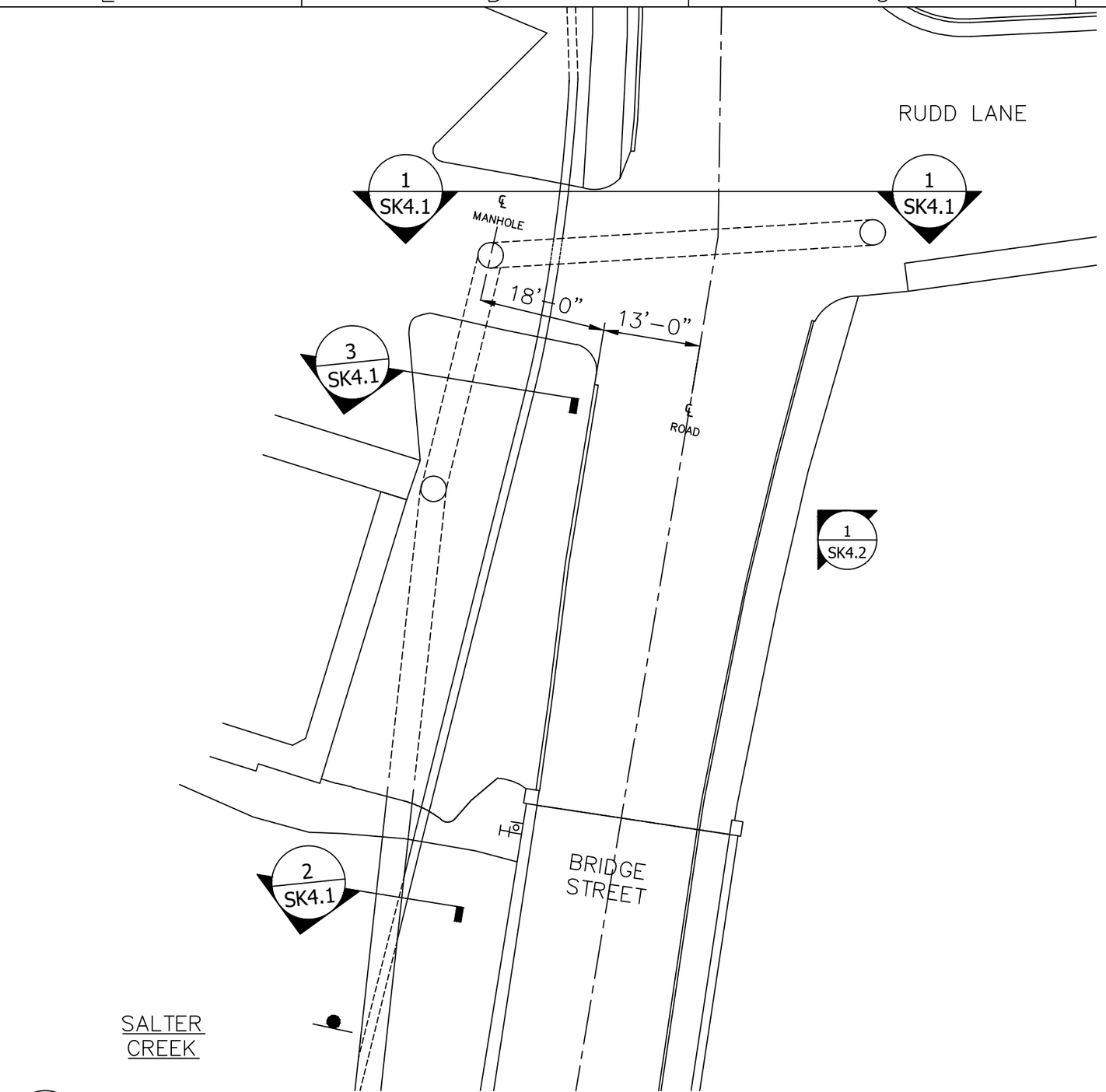

*DRAWINGS ARE TO BE USED FOR PRESENTATION PURPOSES ONLY

N

1 / SK3.1 ENLARGED PLAN WITH SYNMBOLS ONLY
SCALE: 1/16"=1'-0"

REV:	ZONE:	REVISION NOTES:	REVISIONS

DESIGNED BY: J.CROFTON
DRAWN BY: B.COLLETTE
REVIEW BY: J.CROFTON
APPROVED BY:
SIGN & DATE:

CROFTON INDUSTRIES, INC.
Construction – Diving – Technical Services
16 Harper Avenue
Portsmouth, Virginia 23707
Tele (757) 397-1131
Fax (757) 397-8693
www.croftondiving.com

CUSTOMER:
DOMINION VIRGINIA POWER

PROJECT TITLE:
PROPOSED BRIDGE STREET DISTRIBUTION CIRCUIT RELOCATION
HAMPTON, VA.

ENLARGED PLAN WITH SYMBOLS ONLY

JOB NO: 14-8289

CONTRACT NO: N/A

SCALE: AS NOTED

REV:
DWG SIZE:
DATE: 01/07/16

SHEET: SK3.1

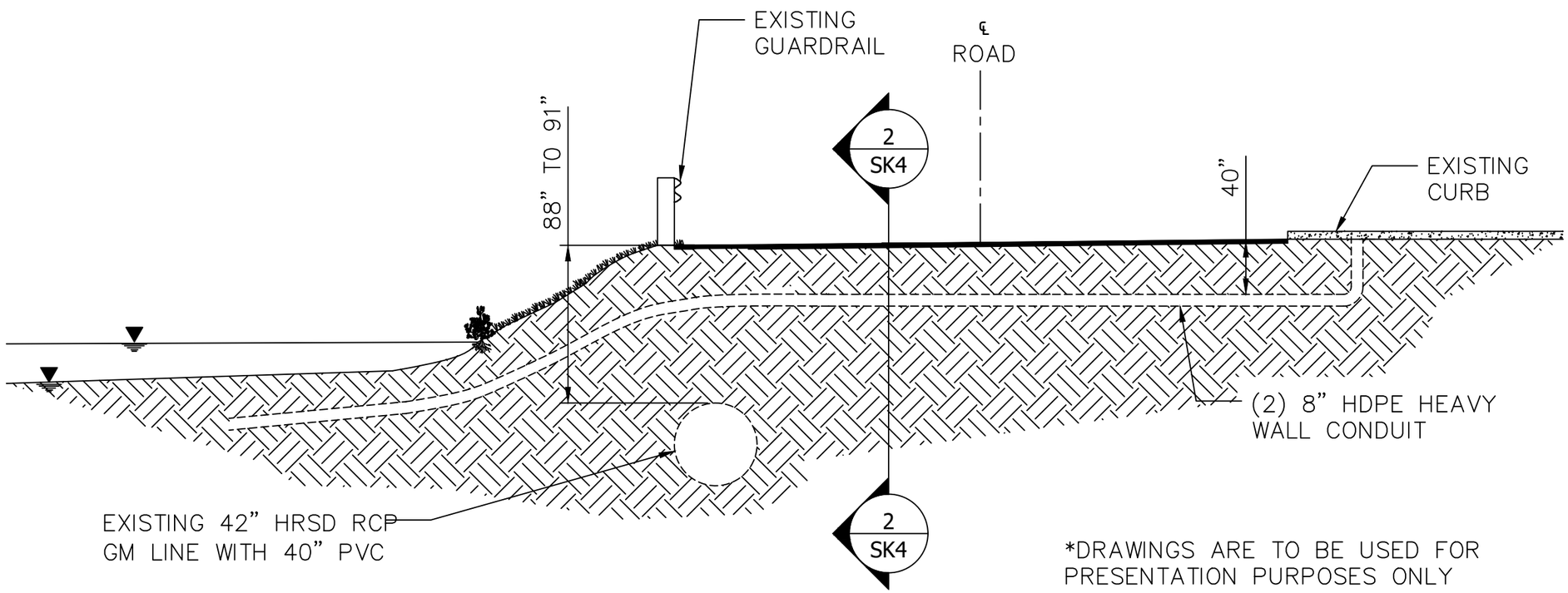

*DRAWINGS ARE TO BE USED FOR PRESENTATION PURPOSES ONLY

1 / SK4 PROFILE – VIEWING NORTH

SCALE: 3/16" = 1'–0"

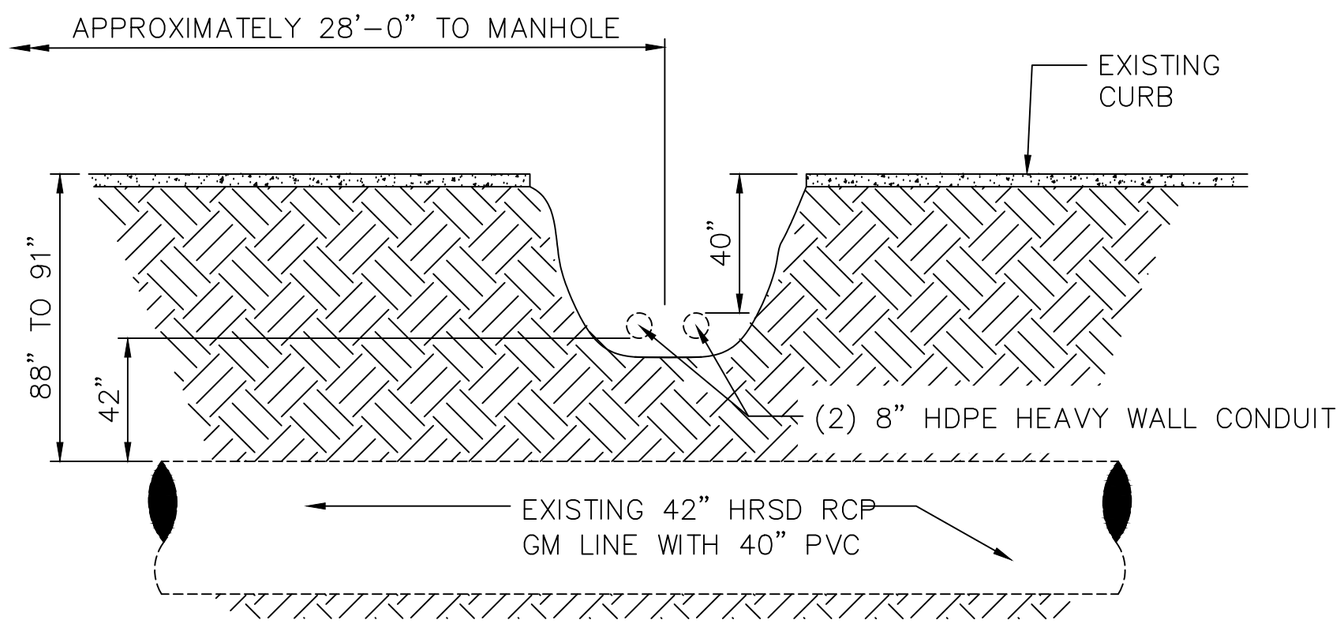

2 / SK4 SECTION

SCALE: 1/4" = 1'–0"

REV:	ZONE:	REVISION NOTES:	REVISIONS

DESIGNED BY: J.CROFTON
DRAWN BY: B.COLLETTE
REVIEW BY: J.CROFTON
APPROVED BY:
SIGN & DATE:

CROFTON INDUSTRIES, INC.
Construction – Diving – Technical Services
16 Harper Avenue
Portsmouth, Virginia 23707
Tele (757) 397-1131
Fax (757) 397-8693
www.croftondiving.com

CUSTOMER: DOMINION VIRGINIA POWER

PROJECT TITLE: PROPOSED BRIDGE STREET DISTRIBUTION CIRCUIT RELOCATION HAMPTON, VA.

PROFILE – SECTION

JOB NO: 14–8289

CONTRACT NO: N/A

SCALE: AS NOTED

REV:

DWG SIZE: B

DATE: 01/07/16

SHEET: SK4

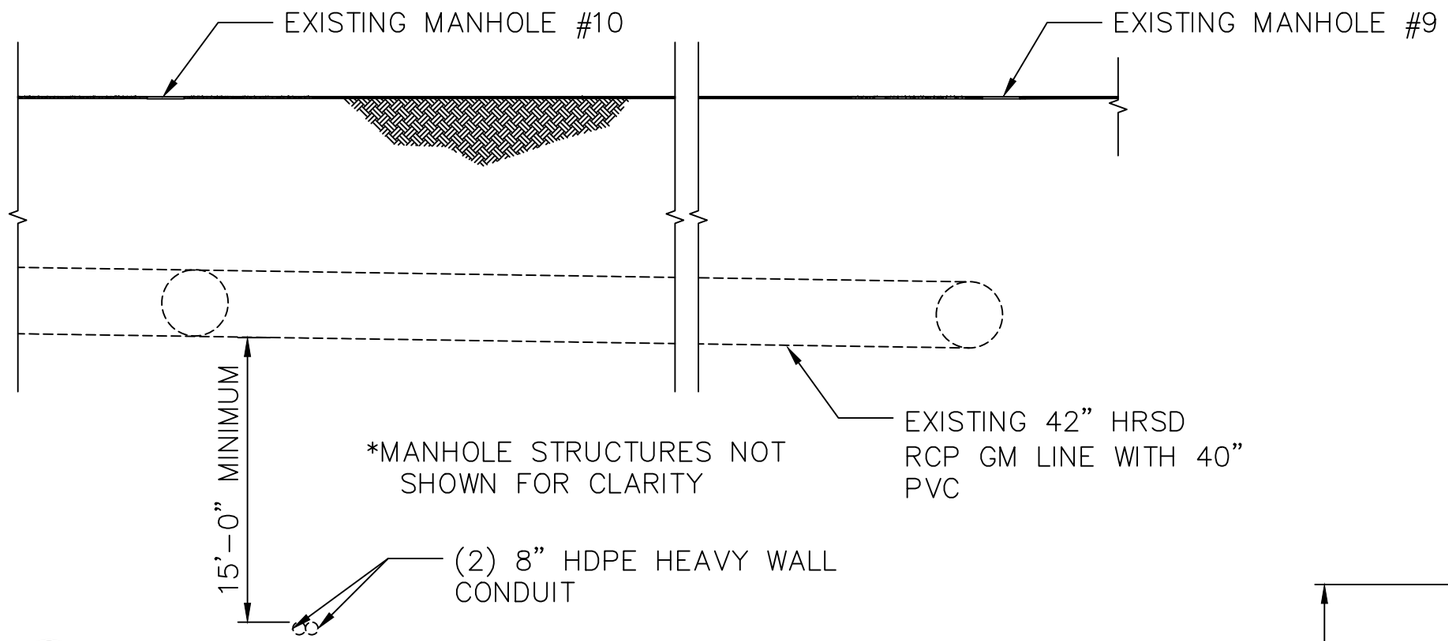

1 / SK4.1 PROFILE VIEWING SOUTH
SCALE: NOT TO SCALE

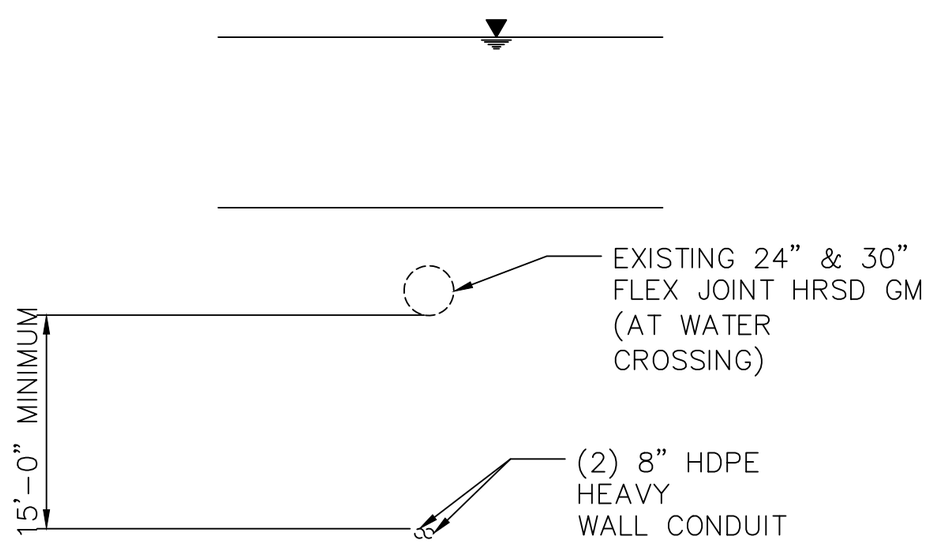

2 / SK4.1 SECTION
SCALE: NOT TO SCALE

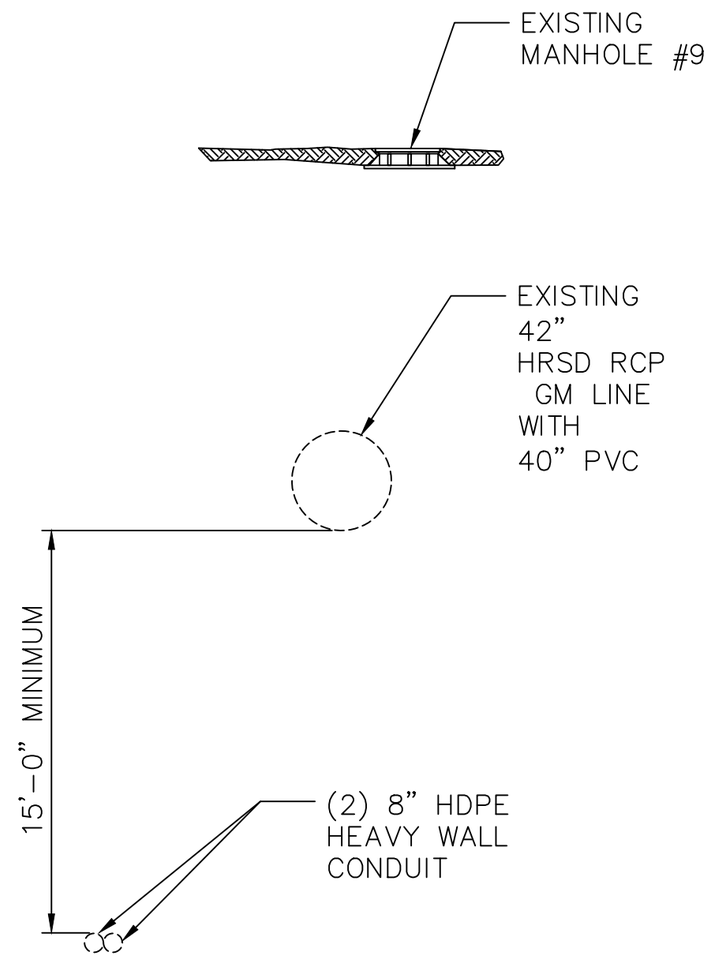

3 / SK4.1 SECTION
SCALE: NOT TO SCALE

*DRAWINGS ARE TO BE USED FOR PRESENTATION PURPOSES ONLY

REV:	ZONE:	REVISION NOTES:	REVISIONS
1		ADDED NOTES	ISSUE 06/12/15

DESIGNED BY: J.CROFTON
DRAWN BY: B.COLLETTE
REVIEW BY: J.CROFTON
APPROVED BY:
SIGN & DATE:

CROFTON INDUSTRIES, INC.
Construction – Diving – Technical Services
16 Harper Avenue
Portsmouth, Virginia 23707
Tele (757) 397-1131
Fax (757) 397-8693
www.croftondiving.com

CUSTOMER: DOMINION VIRGINIA POWER

PROJECT TITLE: PROPOSED BRIDGE STREET DISTRIBUTION CIRCUIT RELOCATION HAMPTON, VA.

PROFILE – SECTIONS

JOB NO: 14-8289

CONTRACT NO: N/A

SCALE: AS NOTED

REV:
DWG SIZE:
DATE: 01/07/16

SHEET: SK4.1

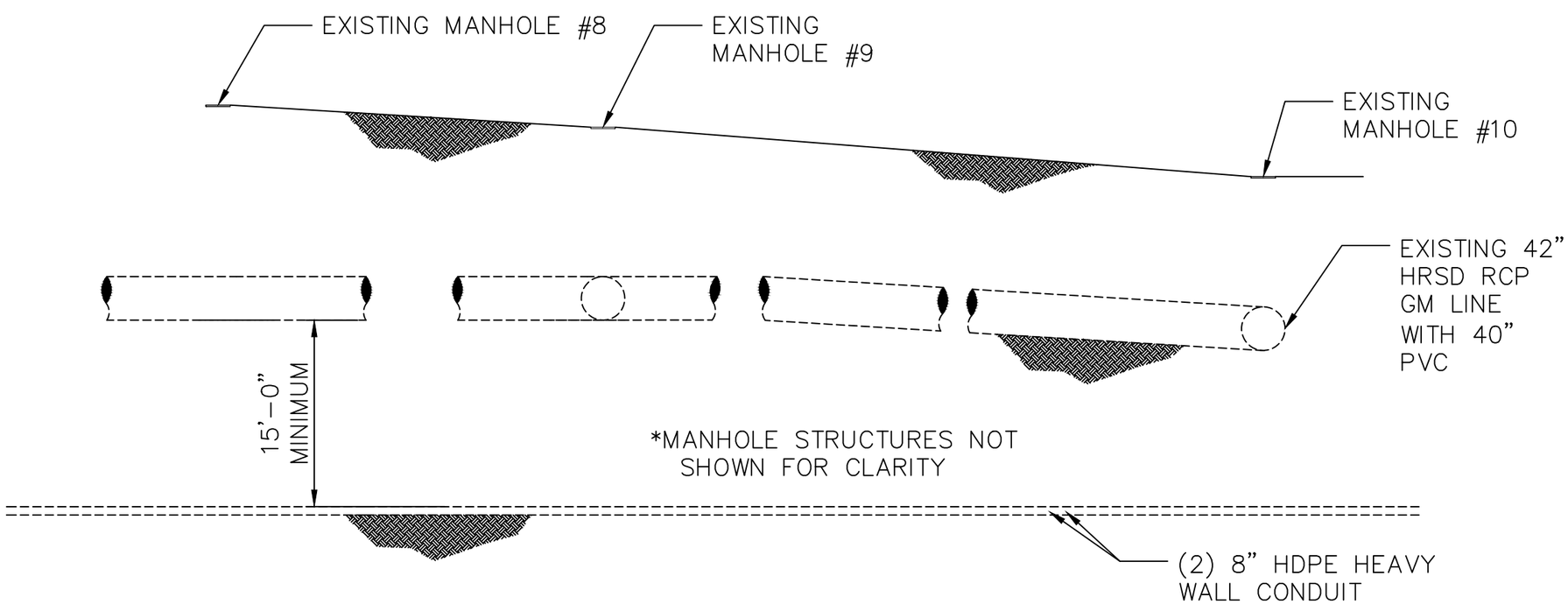

1 / SK4.2 PROFILE VIEWING – NORTHWEST

SCALE: NOT TO SCALE

*DRAWINGS ARE TO BE USED FOR PRESENTATION PURPOSES ONLY

REV:	ZONE:	REVISION NOTES:	REVISIONS

DESIGNED BY: J.CROFTON
DRAWN BY: B.COLLETTE
REVIEW BY: J.CROFTON
APPROVED BY:
SIGN & DATE:

CROFTON INDUSTRIES, INC.
Construction – Diving – Technical Services
16 Harper Avenue
Portsmouth, Virginia 23707
Tele (757) 397-1131
Fax (757) 397-8693
www.croftondiving.com

CUSTOMER: DOMINION VIRGINIA POWER

PROJECT TITLE: PROPOSED BRIDGE STREET DISTRIBUTION CIRCUIT RELOCATION HAMPTON, VA.

PROFILE – VIEWING NORTHWEST

JOB NO: 14-8289

CONTRACT NO: N/A

SCALE: AS NOTED

REV:

DWG SIZE:

DATE: 01/07/16

SHEET: SK4.2