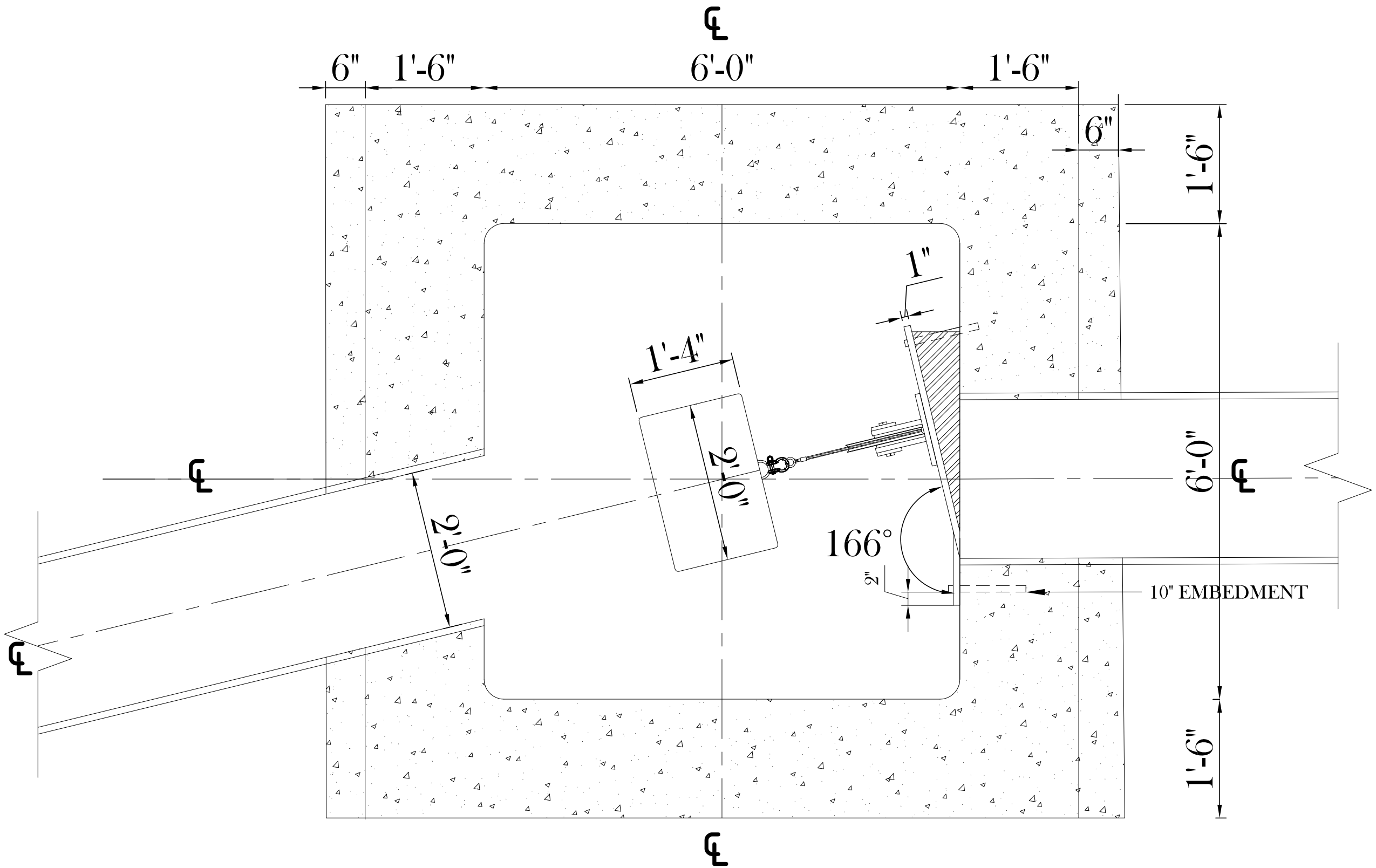

1 / C101 PLAN LOW LEVEL OUTLET

3/4"=1'

REV:	ZONE:	REVISION NOTES:	REVISIONS

DESIGNED BY: D.MROWIEC

DRAWN BY: B. A. COLLETTE

REVIEW BY: D.MROWIEC

APPROVED BY:

SIGN & DATE:

CROFTON INDUSTRIES, INC.
Construction - Diving - Technical Services
16 Harper Avenue
Portsmouth, Virginia 23707
Tele (757) 397-1131
Fax (757) 397-8693
www.croftondiving.com

CUSTOMER:
DOMINION VIRGINIA POWER

PROJECT TITLE:
BREMO STATION
NORTH ASH POND

LOW LEVEL OUTLET
PLAN
HIGH PRESSURE PLUG

JOB NO: 16-7122

CONTRACT NO: N/A

SCALE: AS NOTED

REV:

DWG SIZE: B

DATE: 01-13-2016

SHEET: C101

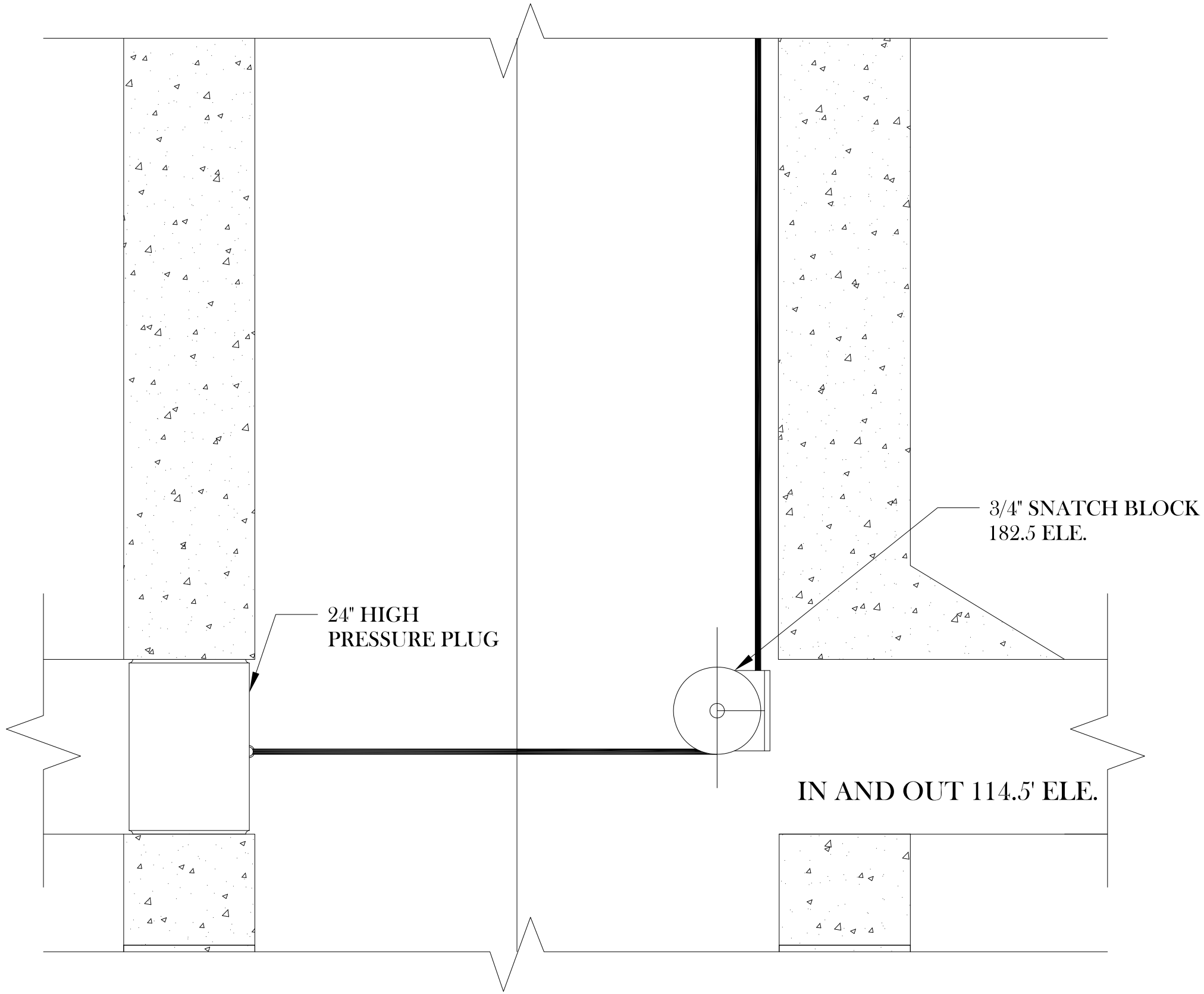

2 ELEVATION LOW LEVEL OUTLET
C102 3/4"=1'

REV:	ZONE:	REVISION NOTES:	REVISIONS

DESIGNED BY: D.MROWIEC
DRAWN BY: B. A. COLLETTE
REVIEW BY: D.MROWIEC
APPROVED BY:
SIGN & DATE:

CROFTON INDUSTRIES, INC.
Construction - Diving - Technical Services
16 Harper Avenue
Portsmouth, Virginia 23707
Tele (757) 397-1131
Fax (757) 397-8693
www.croftondiving.com

CUSTOMER:
DOMINION VIRGINIA POWER

PROJECT TITLE:
BREMO STATION
NORTH ASH POND

LOW LEVEL OUTLET
ELEVATION
HIGH PRESSURE PLUG

JOB NO: 16-7122
CONTRACT NO: N/A
SCALE: AS NOTED
REV:
DWG SIZE: B
DATE: 01-13-2016
SHEET: C102

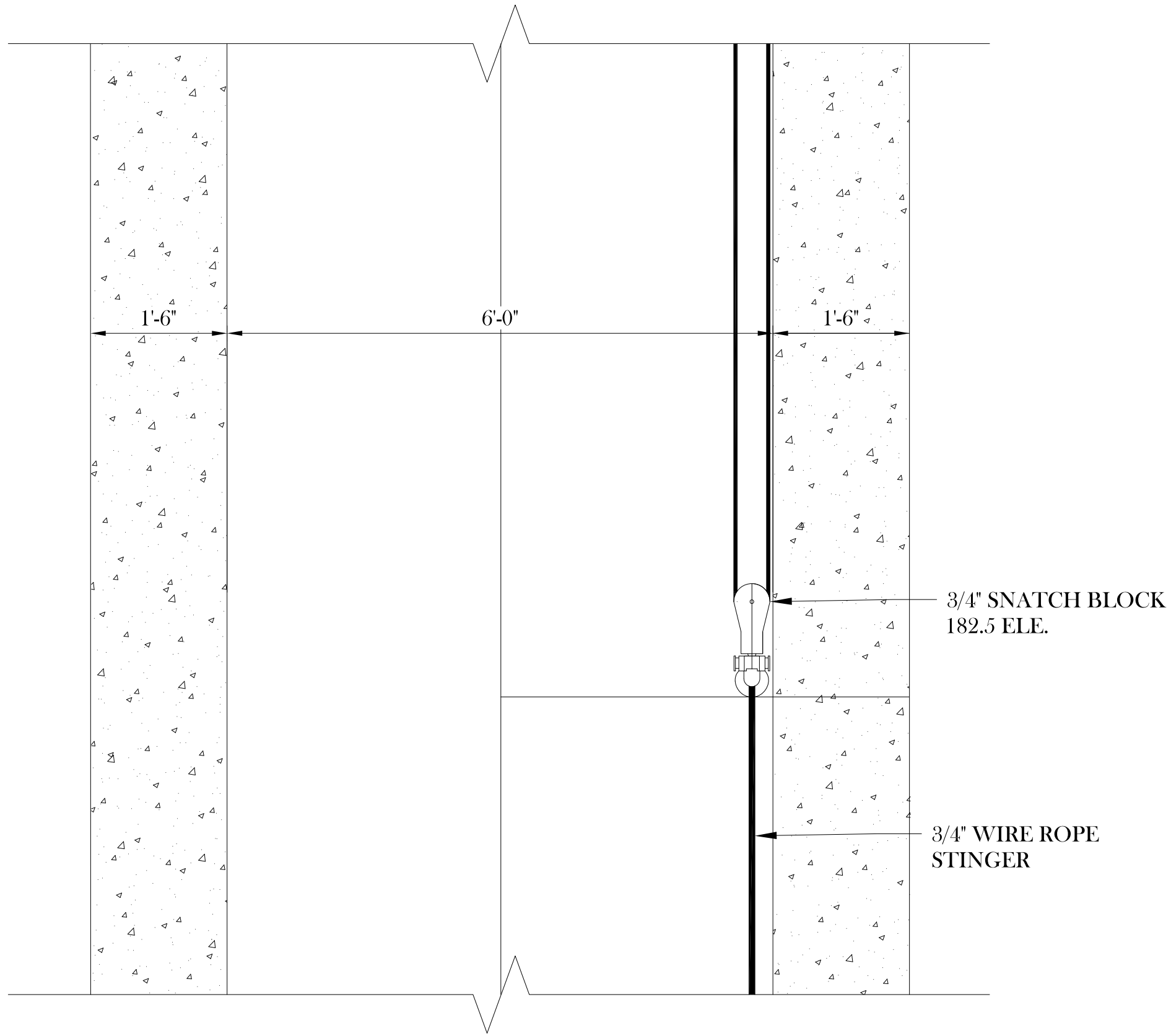

3 / C103 ELEVATION LOW LEVEL OUTLET

3/4"=1'

REV:	ZONE:	REVISION NOTES:	REVISIONS

DESIGNED BY: D.MROWIEC

DRAWN BY: B. A. COLLETTE

REVIEW BY: D.MROWIEC

APPROVED BY:

SIGN & DATE:

CROFTON INDUSTRIES, INC.
Construction - Diving - Technical Services
16 Harper Avenue
Portsmouth, Virginia 23707
Tele (757) 397-1131
Fax (757) 397-8693
www.croftondiving.com

CUSTOMER:
DOMINION VIRGINIA POWER

PROJECT TITLE:
BREMO STATION
NORTH ASH POND

LOW LEVEL OUTLET
ELEVATION
HIGH PRESSURE PLUG

JOB NO: 16-7122

CONTRACT NO: N/A

SCALE: AS NOTED

REV:

DWG SIZE: B

DATE: 01-13-2016

SHEET: C103

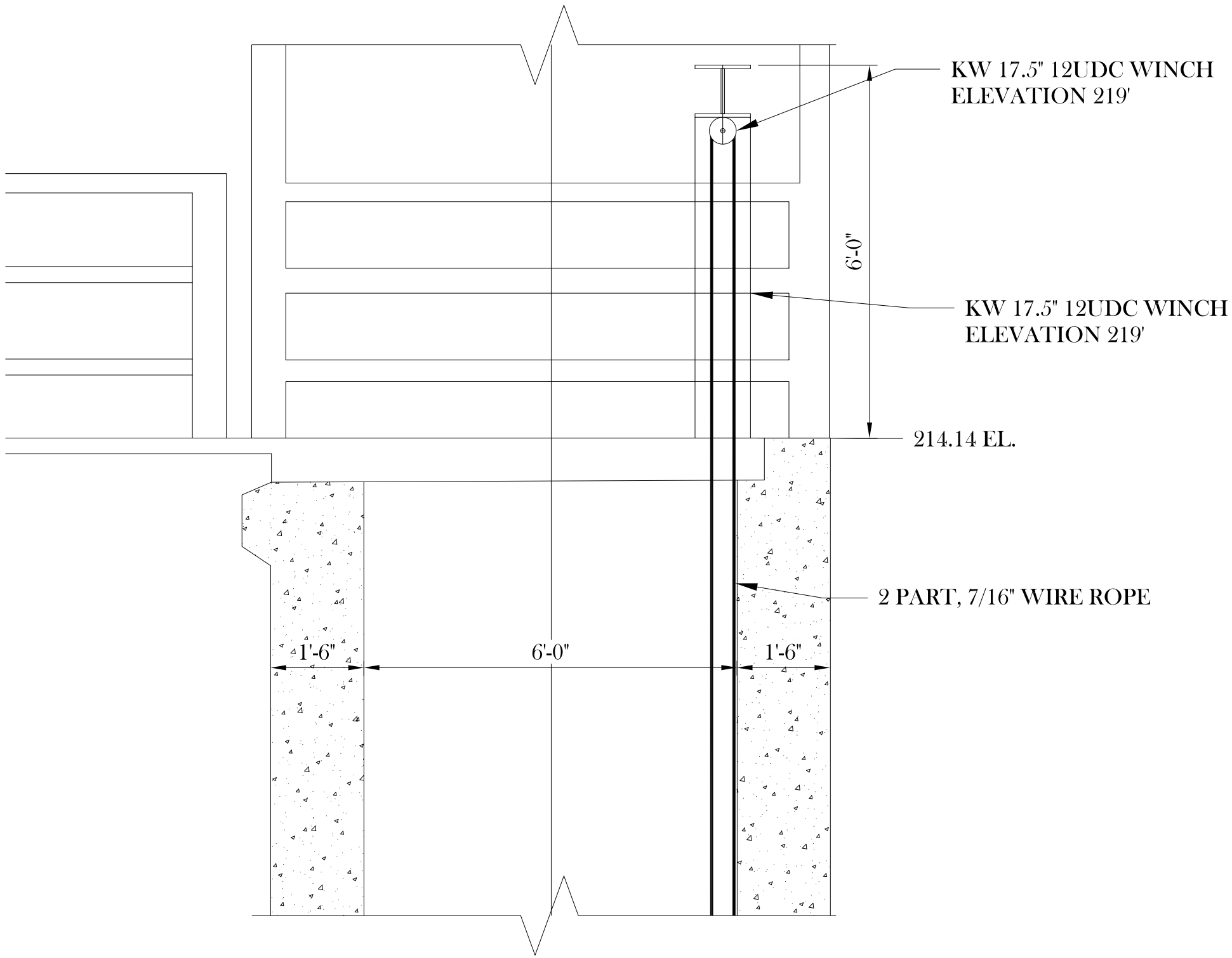

4
C104

ELEVATION LOW LEVEL OUTLET

3/4"=1'

REV:	ZONE:	REVISION NOTES:	REVISIONS

DESIGNED BY: D.MROWIEC

DRAWN BY: B. A. COLLETTE

REVIEW BY: D.MROWIEC

APPROVED BY:

SIGN & DATE:

CROFTON INDUSTRIES, INC.
Construction - Diving - Technical Services
16 Harper Avenue
Portsmouth, Virginia 23707
Tele (757) 397-1131
Fax (757) 397-8693
www.croftondiving.com

CUSTOMER:
DOMINION VIRGINIA POWER

PROJECT TITLE:
BREMO STATION
NORTH ASH POND

LOW LEVEL OUTLET
ELEVATION
HIGH PRESSURE PLUG

JOB NO: 16-7122

CONTRACT NO: N/A

SCALE: AS NOTED

REV:

DWG SIZE: B

DATE: 01-13-2016

SHEET: C104