* The Blue, Black and Red wires is the bottom layer sol dered
* The Yellow wire is the top layer connection

## Emitter and Receiver Circuit (Double)

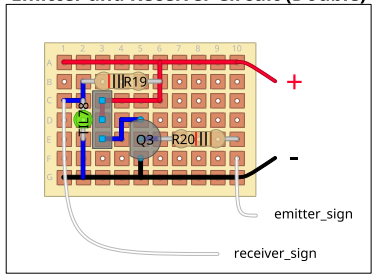


## Signal Acquisition Circuit

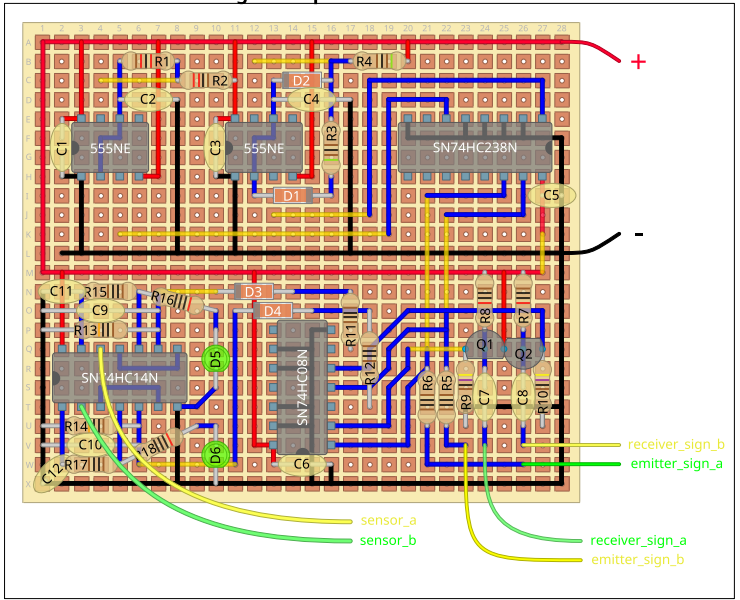

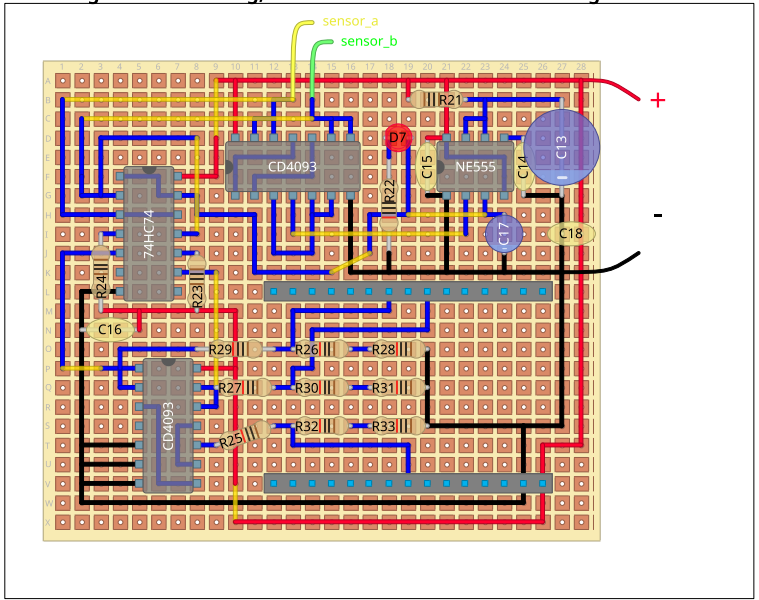
## Signal Conditioning, Flow Identification and Processing Circuit