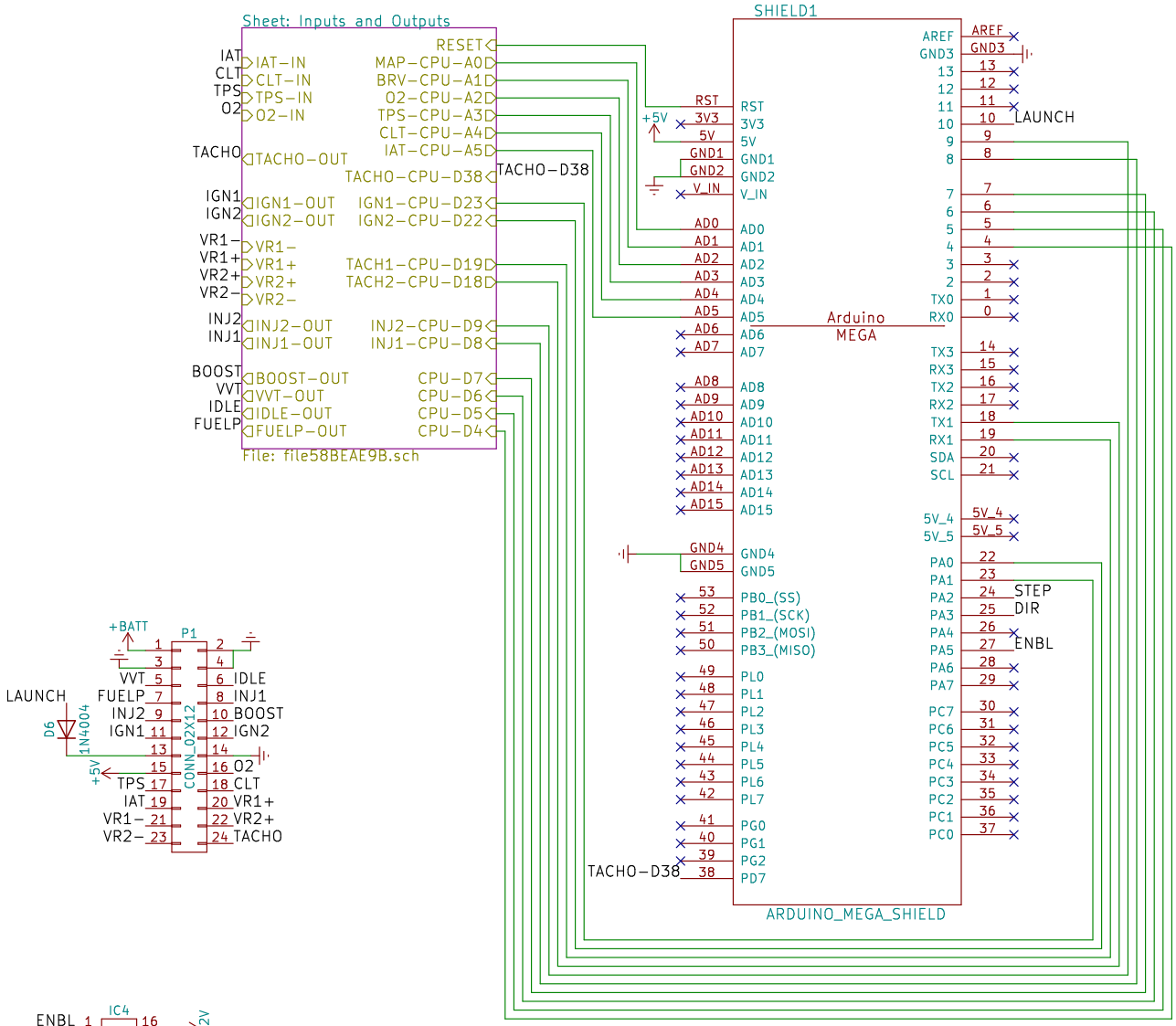


Shields and Modules

Sheet: /
File: NO2C.sch

**Title: NO2C**

| | | |
|---|---|---|
| Size: USLetter | Date: 2018−01−24 | Rev: v0.2.1 |
| KiCad E.D.A. kicad 4.0.7 | | Id: 1/2 |

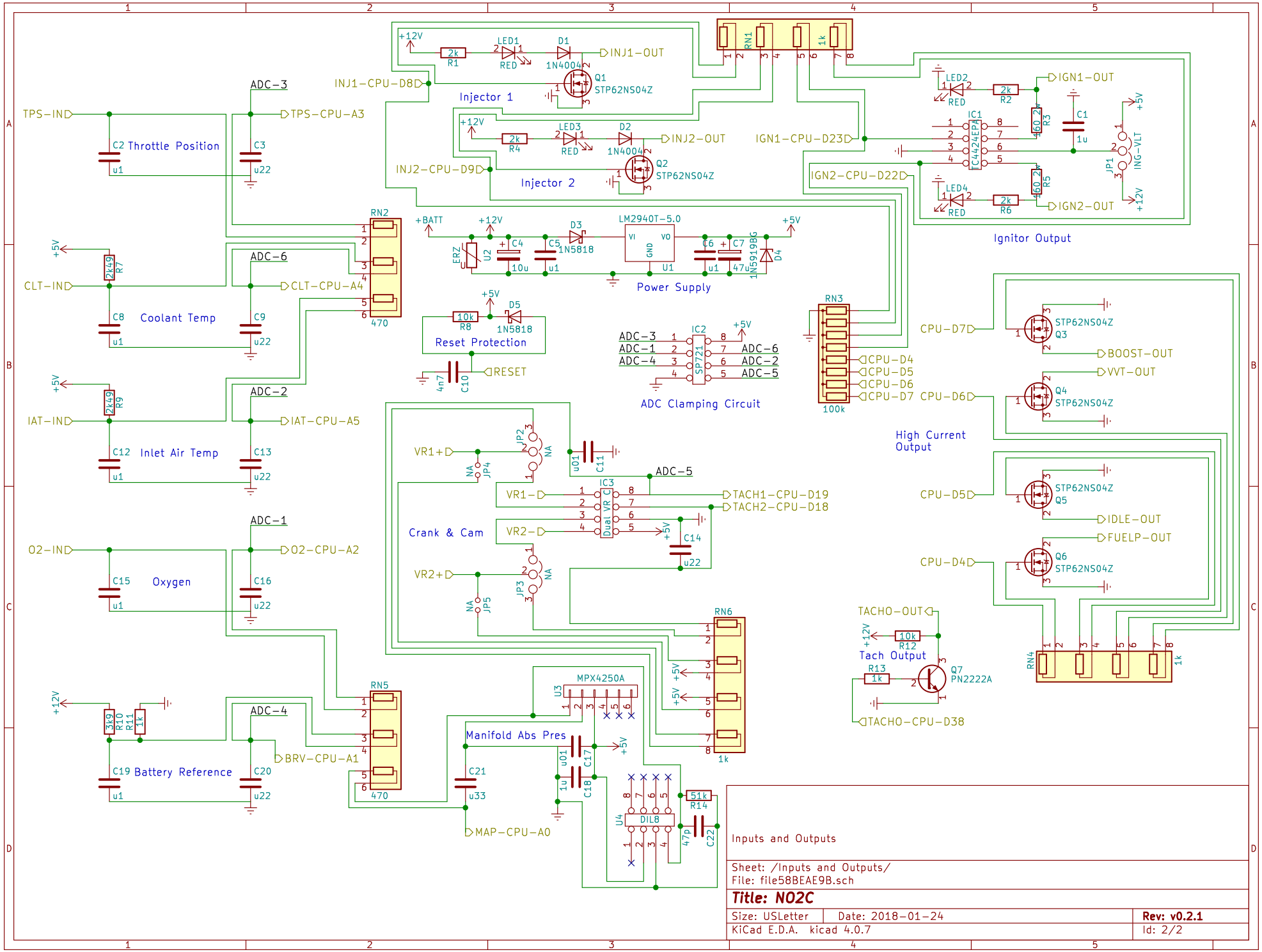
Injector 1
Injector 2
Ignitor Output
Throttle Position
Coolant Temp
Inlet Air Temp
Oxygen
Battery Reference
Power Supply
Reset Protection
ADC Clamping Circuit
Crank & Cam
High Current Output
Tach Output
Manifold Abs Pres
INJ1-OUT
INJ2-OUT
IGN1-OUT
IGN2-OUT
INJ1-CPU-D8
INJ2-CPU-D9
IGN1-CPU-D23
IGN2-CPU-D22
TPS-IN
TPS-CPU-A3
CLT-IN
CLT-CPU-A4
IAT-IN
IAT-CPU-A5
O2-IN
O2-CPU-A2
BRV-CPU-A1
MAP-CPU-A0
RESET
VR1+
VR1-
VR2-
VR2+
TACH1-CPU-D19
TACH2-CPU-D18
CPU-D7
CPU-D6
CPU-D5
CPU-D4
BOOST-OUT
VVT-OUT
IDLE-OUT
FUELP-OUT
TACHO-OUT
TACHO-CPU-D38
ING-VLT
Inputs and Outputs
Sheet: /Inputs and Outputs/
File: file58BEAE9B.sch
Title: NO2C
Size: USLetter
Date: 2018-01-24
Rev: v0.2.1
KiCad E.D.A. kicad 4.0.7
Id: 2/2