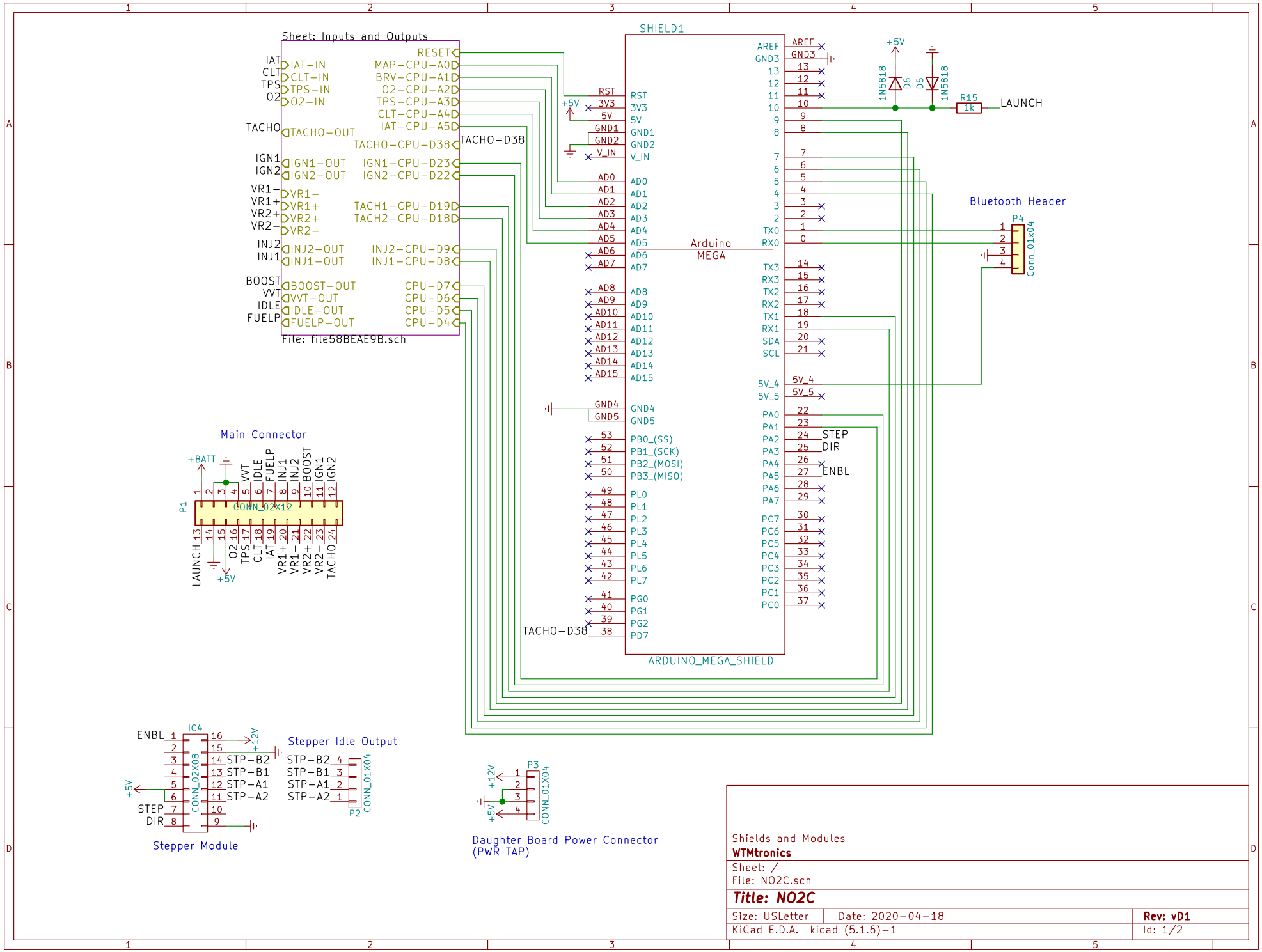
Sheet: Inputs and Outputs
File: file58BEAE9B.sch
IAT
CLT
TPS
O2
TACHO
IGN1
IGN2
VR1−
VR1+
VR2+
VR2−
INJ2
INJ1
BOOST
VVT
IDLE
FUELP
IAT−IN
CLT−IN
TPS−IN
O2−IN
TACHO−OUT
IGN1−OUT
IGN2−OUT
VR1−
VR1+
VR2+
VR2−
INJ2−OUT
INJ1−OUT
BOOST−OUT
VVT−OUT
IDLE−OUT
FUELP−OUT
RESET
MAP−CPU−A0
BRV−CPU−A1
O2−CPU−A2
TPS−CPU−A3
CLT−CPU−A4
IAT−CPU−A5
TACHO−CPU−D38
IGN1−CPU−D23
IGN2−CPU−D22
TACH1−CPU−D19
TACH2−CPU−D18
INJ2−CPU−D9
INJ1−CPU−D8
CPU−D7
CPU−D6
CPU−D5
CPU−D4
TACHO−D38
SHIELD1
Arduino
MEGA
ARDUINO_MEGA_SHIELD
AREF
GND3
RST
3V3
5V
GND1
GND2
V_IN
AD0
AD1
AD2
AD3
AD4
AD5
AD6
AD7
AD8
AD9
AD10
AD11
AD12
AD13
AD14
AD15
GND4
GND5
PB0_(SS)
PB1_(SCK)
PB2_(MOSI)
PB3_(MISO)
PL0
PL1
PL2
PL3
PL4
PL5
PL6
PL7
PG0
PG1
PG2
PD7
TX0
RX0
TX3
RX3
TX2
RX2
TX1
RX1
SDA
SCL
5V_4
5V_5
PA0
PA1
PA2
PA3
PA4
PA5
PA6
PA7
PC7
PC6
PC5
PC4
PC3
PC2
PC1
PC0
STEP
DIR
ENBL
+5V
1N5818
D6
D5
R15
1k
LAUNCH
Bluetooth Header
P4
Conn_01x04
Main Connector
+BATT
P1
CONN_02X12
VVT
IDLE
FUELP
INJ1
INJ2
BOOST
IGN1
IGN2
LAUNCH
O2
TPS
CLT
IAT
VR1+
VR1−
VR2+
VR2−
TACHO
+5V
IC4
CONN_02X08
ENBL
STEP
DIR
+12V
STP−B2
STP−B1
STP−A1
STP−A2
Stepper Idle Output
P2
CONN_01X04
Stepper Module
P3
CONN_01X04
Daughter Board Power Connector
(PWR TAP)
Shields and Modules
WTMtronics
Sheet: /
File: NO2C.sch
Title: NO2C
Size: USLetter
Date: 2020−04−18
Rev: vD1
KiCad E.D.A. kicad (5.1.6)−1
Id: 1/2

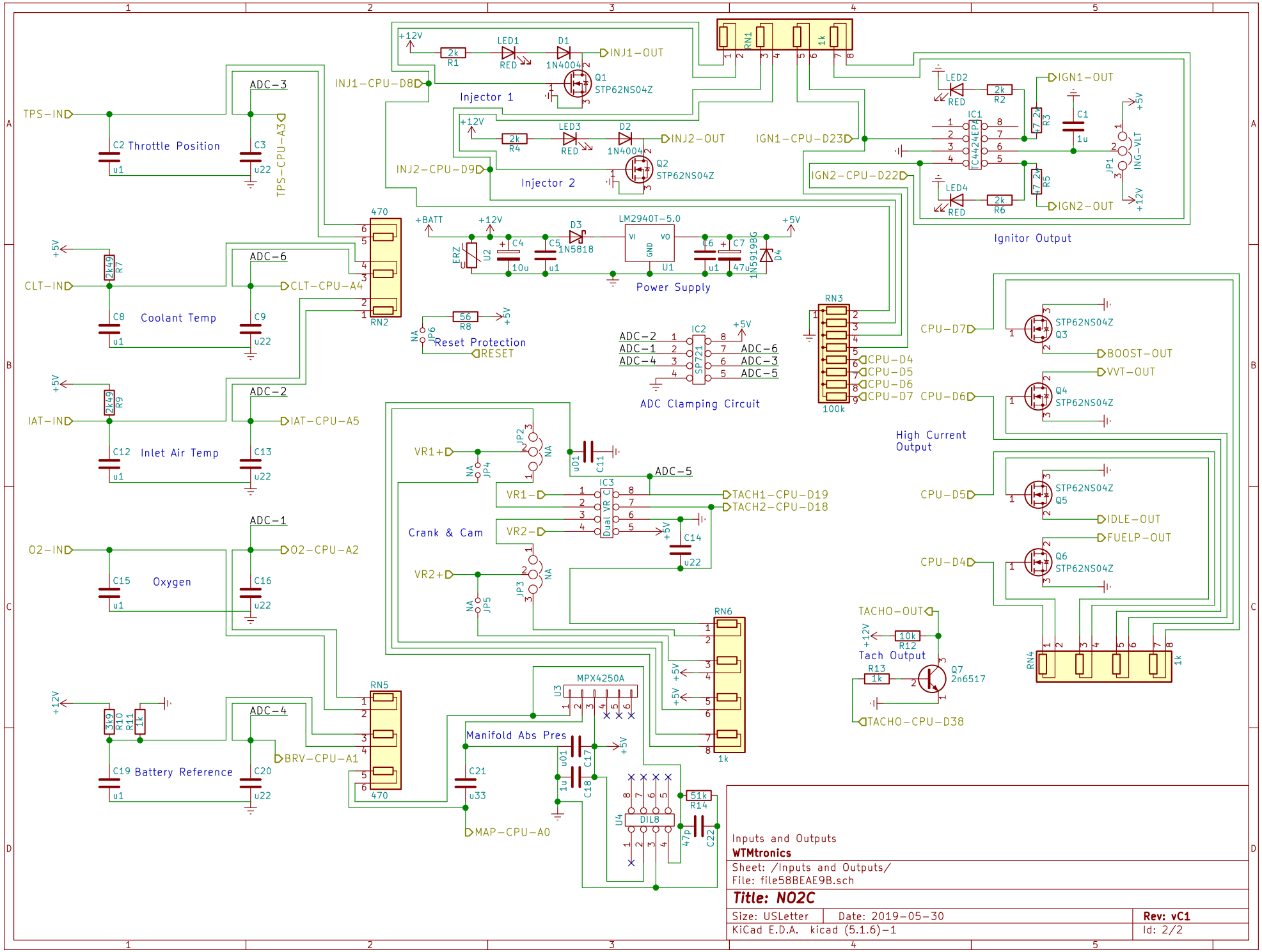
Throttle Position
Coolant Temp
Inlet Air Temp
Oxygen
Battery Reference
Injector 1
Injector 2
Power Supply
Reset Protection
ADC Clamping Circuit
Crank & Cam
Manifold Abs Pres
Ignitor Output
High Current Output
Tach Output
TPS-IN
CLT-IN
IAT-IN
O2-IN
INJ1-CPU-D8
INJ2-CPU-D9
INJ1-OUT
INJ2-OUT
IGN1-CPU-D23
IGN2-CPU-D22
IGN1-OUT
IGN2-OUT
ING-VLT
TPS-CPU-A3
CLT-CPU-A4
IAT-CPU-A5
O2-CPU-A2
BRV-CPU-A1
MAP-CPU-A0
RESET
VR1+
VR1-
VR2-
VR2+
TACH1-CPU-D19
TACH2-CPU-D18
CPU-D7
CPU-D6
CPU-D5
CPU-D4
BOOST-OUT
VVT-OUT
IDLE-OUT
FUELP-OUT
TACHO-OUT
TACHO-CPU-D38
ADC-1
ADC-2
ADC-3
ADC-4
ADC-5
ADC-6
+12V
+5V
+BATT
LM2940T-5.0
MPX4250A
STP62NS04Z
IC4424EPA
SP721
Dual VR C
DIL8
Inputs and Outputs
WTMtronics
Sheet: /Inputs and Outputs/
File: file58BEAE9B.sch
Title: NO2C
Size: USLetter
Date: 2019-05-30
Rev: vC1
KiCad E.D.A. kicad (5.1.6)-1
Id: 2/2