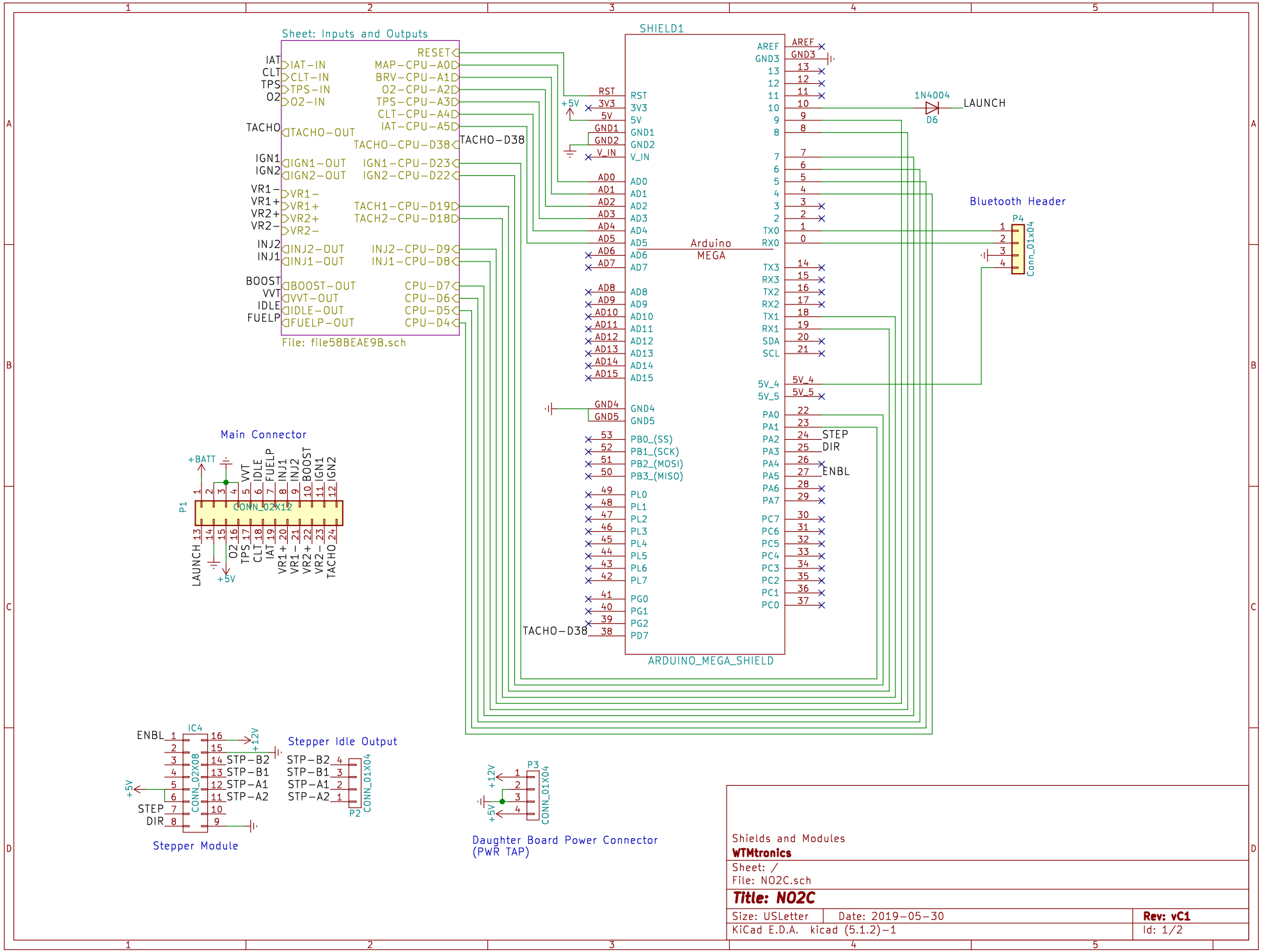

Shields and Modules
WTMtronics
Sheet: /
File: NO2C.sch

Title: NO2C

Size: USLetter	Date: 2019−05−30	**Rev: vC1**
KiCad E.D.A. kicad (5.1.2)−1		Id: 1/2

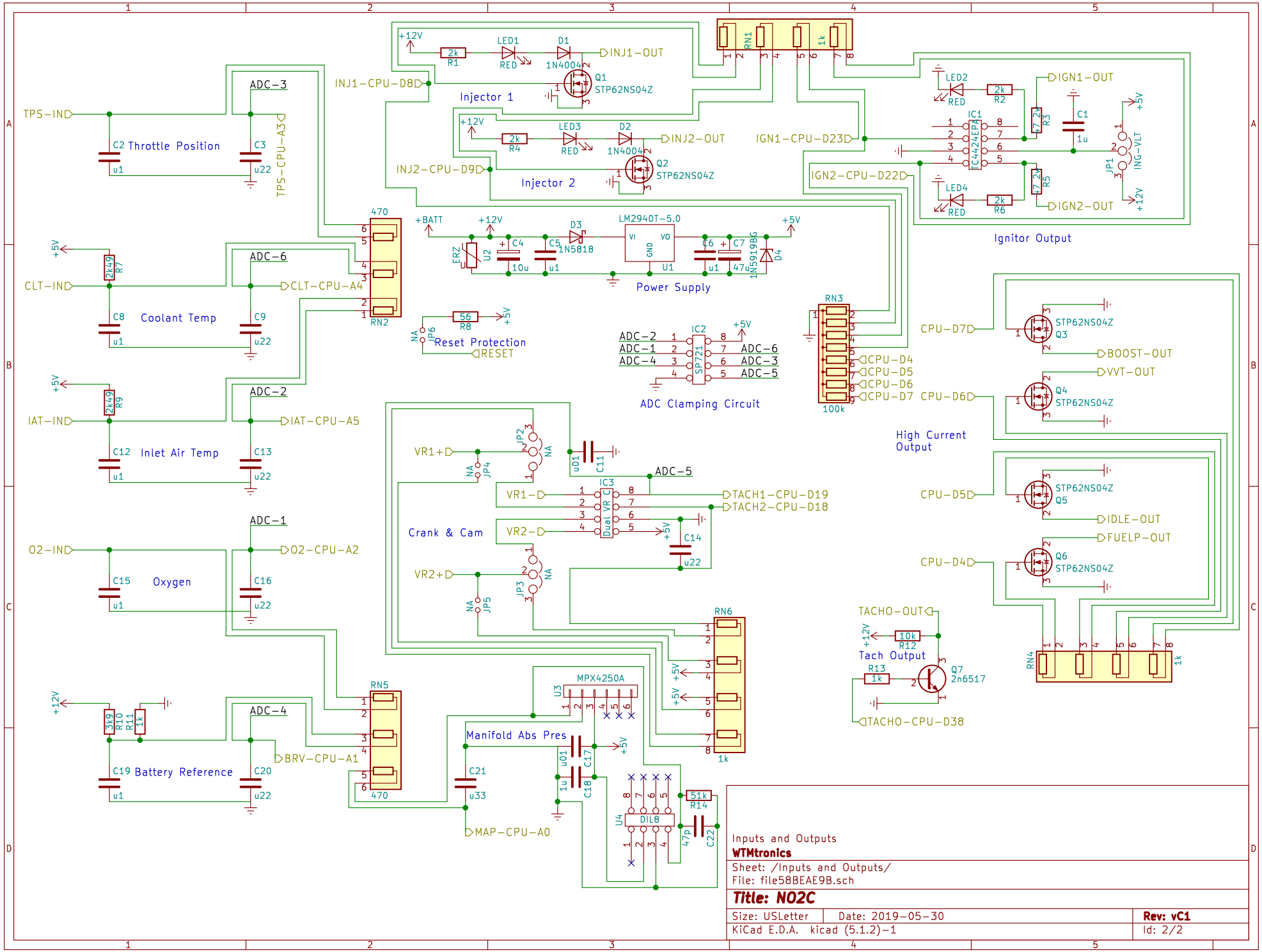
Throttle Position
Coolant Temp
Inlet Air Temp
Oxygen
Battery Reference
Injector 1
Injector 2
Power Supply
Reset Protection
ADC Clamping Circuit
Ignitor Output
High Current Output
Crank & Cam
Tach Output
Manifold Abs Pres
TPS-IN
CLT-IN
IAT-IN
O2-IN
ADC-3
ADC-6
ADC-2
ADC-1
ADC-4
ADC-5
TPS-CPU-A3
CLT-CPU-A4
IAT-CPU-A5
O2-CPU-A2
BRV-CPU-A1
MAP-CPU-A0
INJ1-CPU-D8
INJ2-CPU-D9
IGN1-CPU-D23
IGN2-CPU-D22
INJ1-OUT
INJ2-OUT
IGN1-OUT
IGN2-OUT
ING-VLT
RESET
VR1+
VR1-
VR2-
VR2+
TACH1-CPU-D19
TACH2-CPU-D18
CPU-D7
CPU-D6
CPU-D5
CPU-D4
BOOST-OUT
VVT-OUT
IDLE-OUT
FUELP-OUT
TACHO-OUT
TACHO-CPU-D38
+12V
+5V
+BATT
LM2940T-5.0
MPX4250A
Q1 STP62NS04Z
Q2 STP62NS04Z
Q3 STP62NS04Z
Q4 STP62NS04Z
Q5 STP62NS04Z
Q6 STP62NS04Z
Q7 2n6517
IC1 TC4424EPA
IC2 SP721
IC3 Dual VR C
U1 LM2940T-5.0
U3 MPX4250A
U4 DIL8
D1 1N4004
D2 1N4004
D3 1N5818
D4 1N5919BG
LED1 RED
LED2 RED
LED3 RED
LED4 RED
RN1 1k
RN2 470
RN3 100k
RN4 1k
RN5 470
RN6 1k
Inputs and Outputs
WTMtronics
Sheet: /Inputs and Outputs/
File: file58BEAE9B.sch
Title: NO2C
Size: USLetter
Date: 2019-05-30
Rev: vC1
KiCad E.D.A. kicad (5.1.2)-1
Id: 2/2