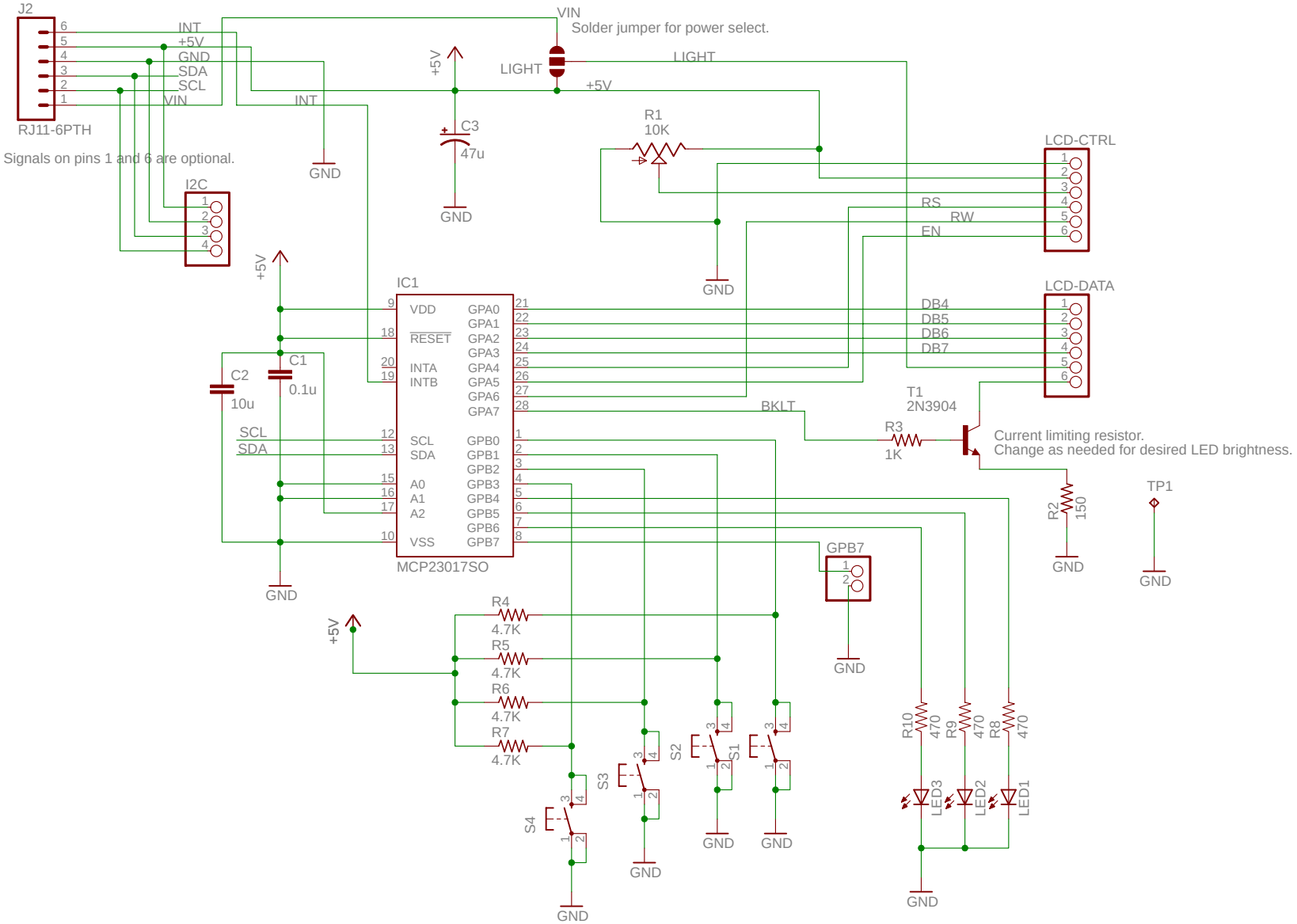

Copyright (c) 2010 MLG Properties, LLC.
Permission hereby granted for use under Creative Commons CC-BY-SA license.
Portions of this schematic are based on the JeeLabs LCD Plug by J.C. Wippler

TITLE: LCDapter-330	
Document Number:	REV:
Date: 11/4/2010 12:56:57 PM	Sheet: 1/1