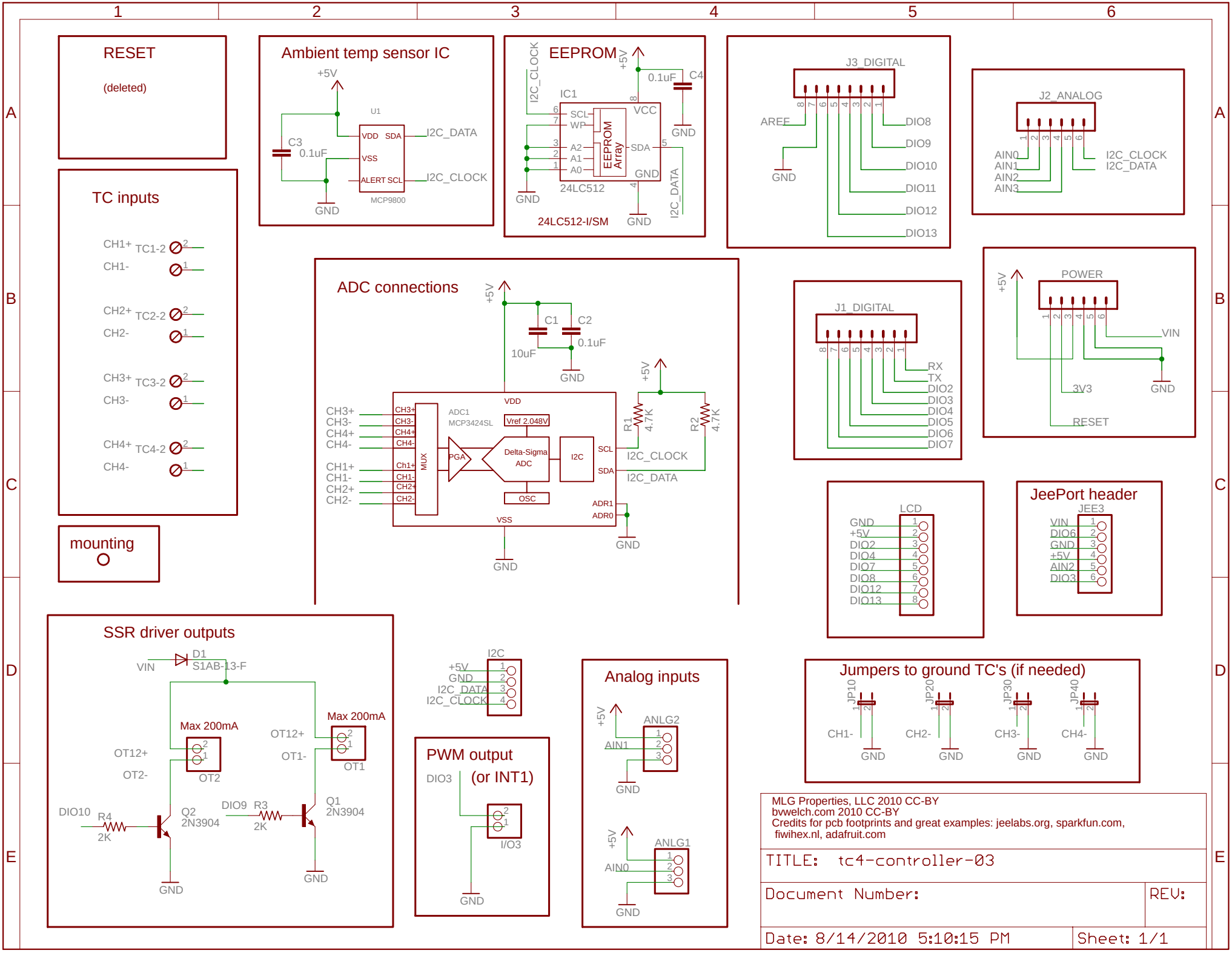
RESET
(deleted)
Ambient temp sensor IC
+5V
U1
C3
0.1uF
VDD SDA
VSS
ALERT SCL
I2C_DATA
I2C_CLOCK
GND
MCP9800
EEPROM
I2C_CLOCK
IC1
+5V
0.1uF
C4
SCL
WP
A2
A1
A0
VCC
SDA
GND
EEPROM Array
24LC512
24LC512-I/SM
I2C_DATA
J3_DIGITAL
AREF
GND
DIO8
DIO9
DIO10
DIO11
DIO12
DIO13
J2_ANALOG
AIN0
AIN1
AIN2
AIN3
I2C_CLOCK
I2C_DATA
TC inputs
CH1+ TC1-2
CH1-
CH2+ TC2-2
CH2-
CH3+ TC3-2
CH3-
CH4+ TC4-2
CH4-
ADC connections
+5V
C1
C2
10uF
0.1uF
GND
VDD
ADC1
MCP3424SL
Vref 2.048V
MUX
PGA
Delta-Sigma ADC
I2C
OSC
VSS
SCL
SDA
ADR1
ADR0
R1 4.7K
R2 4.7K
I2C_CLOCK
I2C_DATA
CH3+
CH3-
CH4+
CH4-
CH1+
CH1-
CH2+
CH2-
J1_DIGITAL
RX
TX
DIO2
DIO3
DIO4
DIO5
DIO6
DIO7
POWER
VIN
3V3
RESET
mounting
LCD
GND
+5V
DIO2
DIO4
DIO7
DIO8
DIO12
DIO13
JeePort header
JEE3
VIN
DIO6
GND
+5V
AIN2
DIO3
SSR driver outputs
VIN
D1
S1AB-13-F
Max 200mA
OT12+
OT2-
OT2
OT1-
OT1
DIO10
R4
2K
Q2
2N3904
DIO9
R3
2K
Q1
2N3904
GND
I2C
+5V
GND
I2C_DATA
I2C_CLOCK
PWM output
(or INT1)
DIO3
I/O3
Analog inputs
+5V
ANLG2
AIN1
ANLG1
AIN0
Jumpers to ground TC's (if needed)
JP10
JP20
JP30
JP40
CH1-
CH2-
CH3-
CH4-
MLG Properties, LLC 2010 CC-BY
bvwelch.com 2010 CC-BY
Credits for pcb footprints and great examples: jeelabs.org, sparkfun.com, fiwihex.nl, adafruit.com
TITLE: tc4-controller-03
Document Number:
REV:
Date: 8/14/2010 5:10:15 PM
Sheet: 1/1