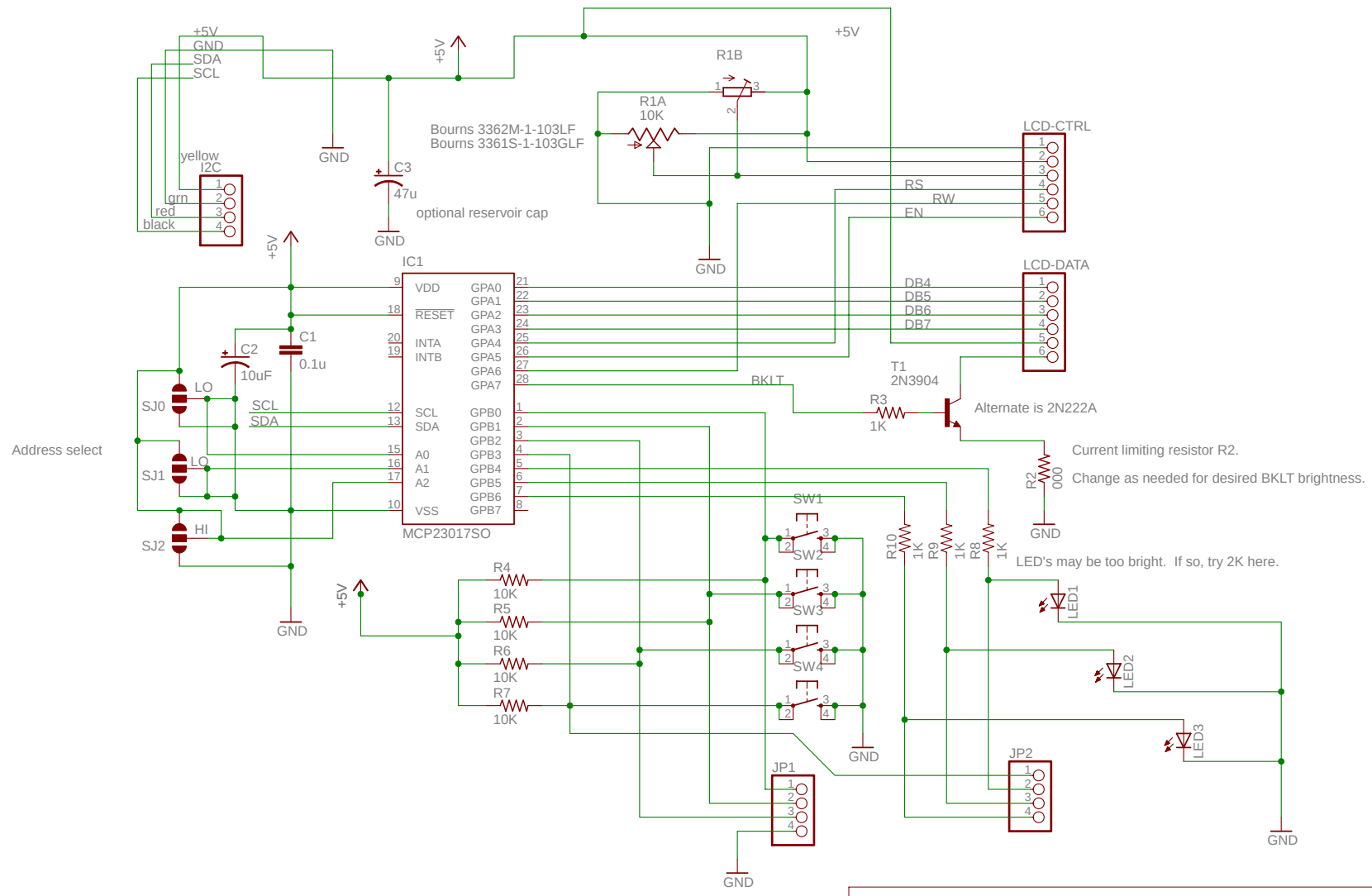

Copyright (c) 2010, 2011 MLG Properties, LLC.
Permission hereby granted for use under Creative Commons CC-BY-SA license.
Portions of this schematic are based on the JeeLabs LCD Plug by J.C. Wippler

TITLE: LCDapterC-122	
Document Number:	REV:
Date: 2/17/2013 7:52:37 PM	Sheet: 1/1