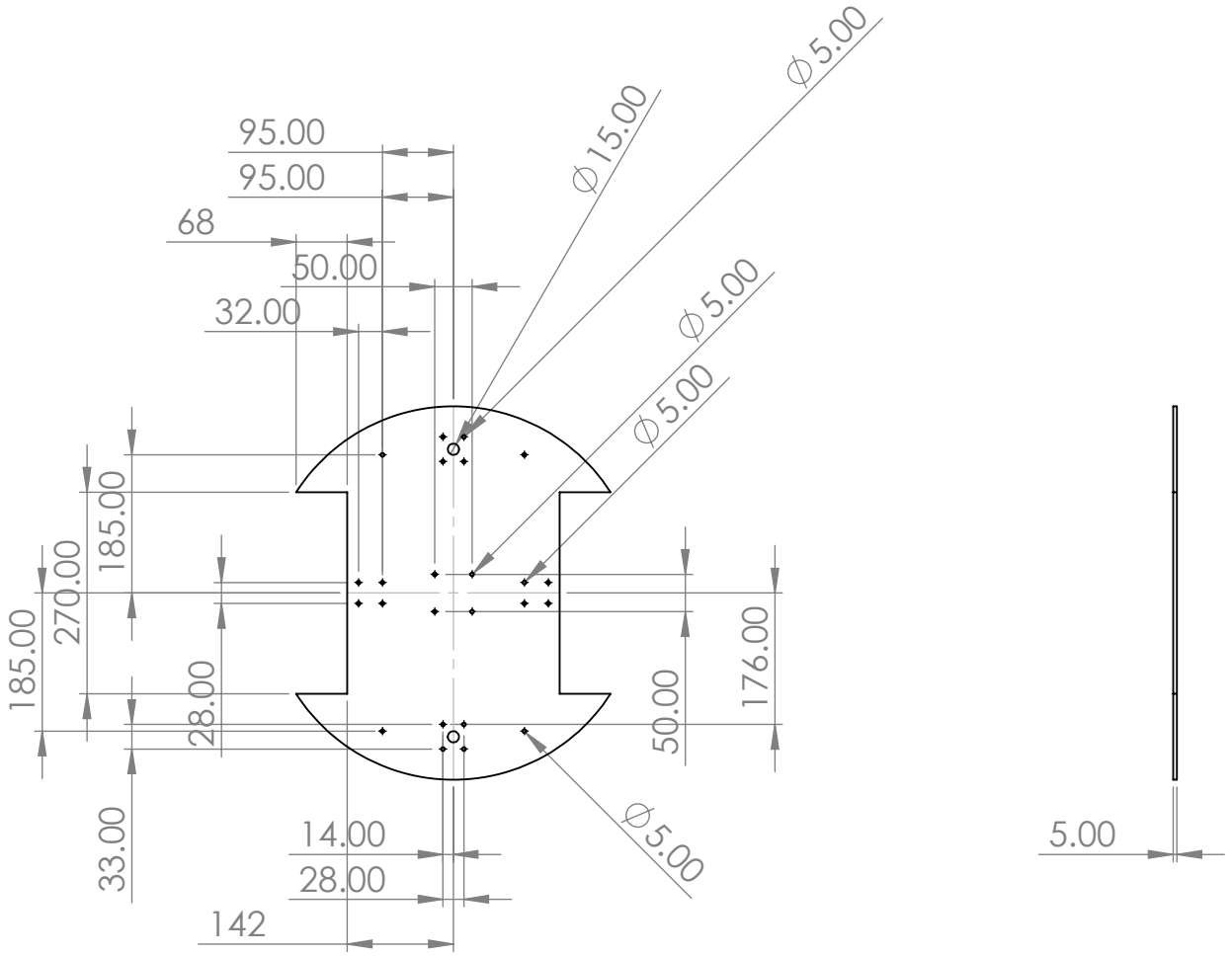

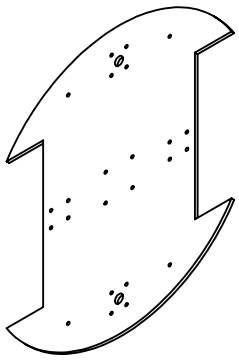

Center for Development of Advanced Technologies		
	Base of the robot	5/21/2022
Scale 1:10		Material: Aluminium